Cobb County
Development Standards

Cobb County...Expect the Best!

Community Development Agency
Physical Address:
1150 Powder Springs Street
Marietta, GA 30064

Mailing Address:
P. O. Box 649
Marietta, GA 30061-0649

www.cobbcounty.org

February 2012 Revision

TABLE OF CONTENTS

TABLE OF CONTENTS 3
100 GENERAL PROVISIONS 19
100.01 INTRODUCTION 19
100.2 AUTHORITY 19
100.3 TITLE 19
100.4 INTERPRETATION 19
100.5 PURPOSE AND INTENT 20
100.05.01 Purpose 20
100.05.02 Intent 21
100.06 AMENDMENTS AND REVISIONS 21
101 ADMINISTRATION 21
101.01 ADVISORY COUNCIL FOR HISTORIC PRESERVATION 21
101.02 ATLANTA REGIONAL COMMISSION 21
101.03 BOARD OF ADJUSTMENTS AND APPEALS 21
101.04 BOARD OF COMMISSIONERS 22
101.05 BOARD OF ZONING APPEALS 22
101.06 BUSINESS LICENSE REVIEW BOARD 22
101.07 COBB COUNTY CEMETERY PRESERVATION COMMISSION 22
101.08 COBB COUNTY HISTORIC PRESERVATION COMMISSION 22
101.09 COBB COUNTY HOMEBUILDERS ADVISORY BOARD 22
101.10 COBB COUNTY WATER SYSTEM 23
101.10.01 Administration and Agency Director 23
101.10.02 Customer Service 23
101.10.03 Engineering 23
101.10.04 System Maintenance 23
101.10.05 Water Protection 23
101.10.06 Stormwater 23
101.11 COMMUNITY DEVELOPMENT AGENCY 23
101.11.01 Administration Division and Agency Director 24
101.11.02 Business License Division 24
101.11.03 Code Enforcement Division 24
101.11.04 Development and Inspections Division 24
101.11.05 Planning Division 27
101.11.06 Zoning 27
101.12 COUNTY MANAGER 27
101.13 DEPARTMENT OF COMMUNITY AFFAIRS 27
101.14 DEPARTMENT OF TRANSPORTATION 28
101.14.01 Department of Transportation Agency Director 28
101.14.02 Aviation Division 28
101.14.03 Engineering Division 28
101.14.04 Operations Division 28
101.14.05 Transit Division 28
101.15 DEVELOPMENT PLAN REVIEW COMMITTEE 28

101.16 ENVIRONMENTAL PROTECTION AGENCY....29
101.17 FIRE AND EMERGENCY SERVICES....29
101.18 OFFICE OF ECONOMIC DEVELOPMENT....29
101.19 OFFICE OF ENVIRONMENTAL HEALTH....29
101.20 PLANNING COMMISSION....29
101.21 STATE AGRICULTURAL DEPARTMENT....29
101.22 STATE ENVIRONMENTAL PROTECTION DIVISION....29
101.23 STATE PRESERVATION DIVISION....29
101.24 U.S. ARMY CORPS OF ENGINEERS....29
102 DEVELOPMENT REVIEW PROCESS....30
102.01 GENERAL....30
102.02 PRE-APPLICATION CONFERENCE....31
102.03 APPLICATION FOR SITE PLAN REVIEW....31
102.03.01 Site Plan Review Conference....32
102.03.02 Project Approval....33
102.03.02(A) One Stop Approval Conference....33
102.03.02(B) Walk-Through Approval....34
102.03.03 Land Disturbance Permit....34
102.03.04 Grading Permit....34
102.04 APPLICATION FOR STRUCTURAL PLAN REVIEW....34
102.04.01 For Review Only....34
102.04.02 For Review and Permit....35
102.05 EXPIRATION OF APPROVAL....36
102.06 PLAN REVISIONS/AMENDMENTS....36
102.07 TRANSFER OF DEVELOPMENT RIGHTS UNDER PERMIT....36
102.08 VESTING OF RIGHTS UNDER PERMIT....37
102.09 SINGLE BUILDING PERMIT....37
103 DEVELOPMENT PERMIT/APPROVALS....37
103.01 ADMINISTRATIVE VARIANCE....42
103.02 AESTHETIC SIGN POST PERMIT....42
103.03 AMERICANS WITH DISABILITIES ACT (ADA)....42
103.04 BORROW/FILL PERMIT....43
103.05 BURIAL DISTURBANCE PERMIT....44
103.06 CERTIFICATE OF APPROPRIATENESS....44
103.07 CERTIFICATE OF OCCUPANCY....44
103.08 CHATTAHOOCHEE RIVER DEVELOPMENT CERTIFICATE....44
103.09 CONSTRUCTION AND SALES OFFICE PERMIT....45
103.10 CONVERSION OF SINGLE FAMILY RESIDENCE TO GROUP DAY CARE HOME/DAY CARE CENTER....45
103.11 DAM PERMIT....45
103.12 DEMOLITION PERMIT....45
103.13 DEVELOPMENT OF REGIONAL IMPACT....46
103.14 DRIVEWAY PERMIT....46
103.15 EXPLOSIVE PERMIT....46
103.16 FAST TRACK PERMIT....46

103.17 FLOOD DAMAGE PREVENTION PERMIT 46
103.18 FOOD ESTABLISHMENT DISCHARGE PERMIT 48
103.19 FOOD SERVICE ESTABLISHMENT PERMIT 48
103.20 FOOTINGS SURVEY 48
103.21 FREE STANDING BUILDING/ADDITION PERMIT 48
103.22 GEORGIA MOUNTAIN AND RIVER CORRIDOR ACT 49
103.23 GRADING PERMIT 49
103.24 HOUSE MOVING PERMIT 49
103.25 INDUSTRIAL WASTEWATER DISCHARGE PERMIT 49
103.26 LAND DISTURBANCE PERMIT 49
103.27 LAND USE PERMIT 50
103.28 MOBILE HOME PERMIT 50
103.29 MODEL HOME PERMIT 50
103.30 NPDES PERMIT 52
103.31 ON-SITE SEWAGE MANAGEMENT SYSTEM 52
103.31.01 General 52
103.31.02 Applicability/Exemptions 52
103.31.03 Subdivision Development Utilizing On-Site Sewage Management Systems 53
103.31.04 Subdivision Lot On-Site Sewage Management System Permit ... 54
103.31.05 Lot On-Site Sewage Management System 56
103.31.06 Water Permit for Single Family Dwelling or Commercial Development Utilizing a Septic Tank 56
103.31.07 Inspections 56
103.31.08 Administration and Enforcement Variance 57
103.32 ON-SITE SEWAGE MANAGEMENT SYSTEM REPAIR PERMIT 57
103.33 PERMANENT ROAD CLOSURE PERMIT 57
103.34 PERSONAL CARE HOME 58
103.35 REGIONALLY IMPORTANT RESOURCE 58
103.36 SATELLITE DISH PERMIT 58
103.37 SECTION 404 WETLANDS PERMIT 58
103.38 SEWER CONNECTION PERMIT 58
103.39 SIGN PERMIT 60
103.40 SITE PLAN/STIPULATION AMENDMENT 60
103.41 SPECIAL EXCEPTION USE 60
103.42 SPECIAL HAZARD BUILDING PERMIT 60
103.43 SPECIAL LAND USE PERMIT 61
103.44 STORAGE TANK REMOVAL PERMIT 61
103.45 STORAGE TANK INSTALLATION PERMIT 61
103.46 STORMWATER QUALITY/QUANTITY PERMIT 61
103.47 STRUCTURAL RETAINING WALLS PERMIT 62
103.48 SWIMMING POOL PERMIT 62
103.49 SWIMMING POOL DISCHARGE PERMIT 62
103.50 TELEVISION, LAND MOBILE, COMMUNICATION,

MICROWAVE, RADIO TRANSMISSION ANTENNAE AND TOWER PERMIT 62
103.51 TEMPORARY ROAD CLOSURE PERMIT 63
103.52 TEMPORARY TENT PERMIT 63
103.53 TENANT SPACE/ALTERATION PERMIT 63
103.54 TOURIST COURT PERMIT 63
103.55 TREE CLEARING PERMIT 64
103.56 TRENCHING/EXCAVATION PERMIT 64
103.57 UTILITIES PERMIT 65
103.58 WATER IMPOUNDMENT PERMIT 65
103.59 WATER CONNECTION PERMIT 65
103.60 WATER AND SEWER CONSTRUCTION APPROVAL 66
103.60.01 Revisions to Approved Plans 66
LIST OF ABBREVIATIONS 67
104 LICENSE REQUIREMENTS 68
104.01 GENERAL 68
104.01.01 General 68
104.01.02 Applicability/Exemptions 68
104.01.03 Application/Permit Process 69
104.01.04 Inspections 69
104.02 REQUIRED LICENSE 69
104.03 C0MMERICAL DEVELOPMENT CONSIDERATIONS 70
105 FEE REQUIREMENTS, PENALTIES, AND APPEALS 70
105.01 FEE REQUIREMENTS 70
105.01.01 Water Connection Fees 70
105.01.02 Sewer Connection Fees 71
105.01.03 Water/Sewer Service Area Assessments 71
105.01.04 Building Inspection Section 71
105.01.05 Site Plan Review Section 71
105.01.06 Office of Environmental Health 71
105.01.07 Business License 71
105.01.08 Planning 71
105.01.09 Zoning 72
105.01.10 Fire and Emergency Services 72
105.01.11 Department of Transportation 72
106 IMPACT FEES/DEVELOPMENT AGREEMENTS 72
107 SITE CONSTRUCTION DOCUMENTS 72
107.01 PLAN INFORMATION REQUIREMENTS 72
107.02 PRELIMINARY PLAN/SITE PLAN REQUIREMENTS 73
107.03 GRADING/DRAINAGE PLAN 74
107.04 STORM DRAINAGE PROFILE DRAWING 76
107.05 SOIL EROSION/SEDIMENT EROSION CONTROL PLAN & DETAILS 76
107.06 LANDSCAPE/TREE PLANTING PLAN REQUIREMENTS 78
107.07 WATER LAYOUT PLAN 79

107.07.01 General Water Notes....80
107.08 SANITARY SEWER PLAN....80
107.09 SANITARY SEWER PLAN/PROFILE....81
107.09.01 Special Details....82
107.09.02 General Sanitary Sewer Notes....82
107.10 STREET PLAN/PROFILE SHEETS....82
107.10.01 Intersection Sight Distance Plan....84
107.10.02 General Street Notes....85
107.11 CONSTRUCTION DETAILS....85
107.12 HYDROLOGY REPORT....86
107.13 SITE PLAN TO SATISFY REQUIREMENT OF FLOOD PREVENTION ORDINANCE....87
108 STRUCTURAL PLAN REVIEW DOCUMENTS....87
108.01 BUILDING, FIRE, & LIFE SAFETY CODES....87
108.01.01 Building Code Inspections....88
108.02 PLAN INFORMATION REQUIREMENTS....89
108.03 SINGLE FAMILY/RESIDENTIAL PERMITTING REQUIREMENTS....89
108.04 RESIDENTIAL ACCESSORY STRUCTURE PERMITTING REQUIREMENTS....90
108.05 APARTMENT AND CONDOMINIUMS PERMITTING REQUIRE-MENTS....90
108.06 FEE SIMPLE TOWNHOUSE PERMITTING REQUIREMENTS....91
108.07 TENANT SPACE PERMITTING REQUIREMENTS....92
108.08 ALTERATION PERMITTING PROCESS....93
108.09 FREE STANDING BUILDING AND ADDITION PERMITTING PROCESS....93
108.10 FAST TRACK PERMITTING PROCESS....94
108.11 FIRE DAMAGE REPAIR PERMITTING PROCESS....94
108.12 SATELLITE DISH PERMITTING PROCESS....95
108.13 FREE STANDING SIGN PERMITTING PROCESS....96
108.14 TEMPORARY TENT PERMITTING REQUIREMENTS....96
108.15 DEMOLITION PERMITTING REQUIREMENTS....96
108.16 SWIMMING POOL REQUIREMENTS....97
108.17 STRUCTURAL RETAINING WALLS PERMIT REQUIREMENTS....100
108.18 FOOD SERVICE REQUIREMENTS....101
108.19 PERSONAL CARE HOMES....104
108.20 TRAILER PARKS....106
108.21 TOURIST COURTS....107
108.22 CONVERSION OF SINGLE-FAMILY RESIDENCE TO GROUP DAY CARE HOME/DAY CARE CENTER....108
108.23 CONVERSION APARTMENTS TO CONDOMINIUMS....109
200 PLATS/RECORD DRAWINGS....111
200.01 APPLICABILITY....111
200.02 APPLICATION PROCESS FOR PRELIMINARY PLAT....111
201 PRELIMINARY PLAT....111

201.01(A) SINGLE FAMILY RESIDENTIAL PRELIMINARY PLAT SPECIFICATIONS 111
201.01(B) CONDOMINIUM/MULTIFAMILY RESIDENTIAL PRELIMINARY PLATS 112
201.01(C) NON-RESIDENTIAL PRELIMINARY PLAT SPECIFICATIONS 117
201.02 PRELIMINARY CERTIFICATION STATEMENT 118
201.03 PRELIMINARY PLAT APPROVAL CERTIFICATE 119
202 FINAL PLAT 119
202.01(A) FINAL SINGLE FAMILY RESIDENTIAL PLAT SPECIFICATIONS 119
202.01(B) FINAL CONDOMINIUM/MULTIFAMILY RESIDENTIAL PLATS 121
202.01(C) FINAL NON-RESIDENTIAL PLAT SPECIFICATIONS 125
202.02 FINAL PLAT CERTIFICATES 127
202.01(A) FINAL SINGLE FAMILY RESIDENTIAL PLAT SPECIFICATIONS 127
202.01(B) FINAL CONDOMINIUM/MULTIFAMILY RESIDENTIAL PLATS 129
202.01(C) FINAL NON-RESIDENTIAL PLAT SPECIFICATIONS 133
202.02 FINAL PLAT CERTIFICATES 135
202.03 FINAL PLAT REVISIONS 138
203 LOTS 139
203.01 GENERAL 139
203.02 DIMENSIONS 139
203.03 LOTS ACCESSING PRIVATE EASEMENTS 139
203.04 MULTIPLE-FRONTAGE LOTS 140
203.05 OUTLOT OR LEGEND LOT 140
204 PHASED DEVELOPMENT 140
205 DEDICATION OF RIGHT-OF-WAY AND EASEMENTS 140
206 WATER AND SEWER ACCEPTANCE AND RECORD DRAWINGS 141
206.01 CLOSE OUT STANDARDS 141
206.01.01 Acceptance of Work 141
206.01.02 Guidelines for Record Drawings 142
207 DIGITAL DATA SUBMISSION STANDARDS 142
207.01 FILE FORMAT 143
207.02 COORDINATE SYSTEM 143
207.03 OTHER INFORMATION 143
207.04 OVERVIEW OF LAYERS 143
208 MIXED-USE DEVELOPMENTS 144
208.01 PRE-APPLICATION MEETINGS 144
208.02 PRELIMINARY PLAT 144
208.03 PERMITS 144
208.04 FINAL PLAT 144
300 SECURITIES AND ENFORCEMENT 145
301 MAINTENANCE & PERFORMANCE SECURITIES 145
301.01 MAINTENANCE SECURITIES 145
301.01.01 Guarantee of Installation and Performance 145
301.01.02 Existing Subdivision 146
301.02 INTERJURISDICTIONAL SECURITIES 146

302 ENFORCEMENT 146
303 STOP WORK ORDERS 146
401 STREETS 148
401.01 GENERAL 148
401.02 RIGHT-OF-WAY 148
401.03 ROADWAY/LANE WIDTHS 149
401.04 IMPROVEMENTS ALONG STATE HIGHWAYS 150
401.05 SUPERELEVATION AND RUN-OFF 150
401.06 UNIMPROVED ROAD 150
401.07 INTERSECTION DESIGN 151
401.07.01 Angle of Intersection 151
401.07.02 Intersection Radius 151
401.07.03 Intersection/Corner Sight Distance 151
401.07.04 Vertical Alignment/Intersection Approaches 151
401.07.05 Horizontal Alignment/Intersection Approaches 152
401.07.06 Stormwater Design for Intersections 152
401.08 NEW/PROPOSED STREETS 152
401.08.01 General 152
401.08.02 Local Residential Streets 152
401.08.03 Non-Residential Local Streets 154
401.08.04 Minor & Major Collector Streets 154
401.09 CUL-DE-SACS 154
401.10 MINIMUM CENTERLINE OFFSETS AND INTERSECTION SEPARATION 154
401.11 STREET GRADES AND DESIGN SPEEDS 154
401.11.01 Minimum Grades 154
401.11.02 Maximum Grades 155
401.12 VERTICAL ALIGNMENT 155
401.13 HORIZONTAL ALIGNMENT 155
401.14 PAVEMENT SPECIFICATIONS 156
401.15 CURBS AND GUTTERS 157
401.15.01 Curbing 157
401.15.02 Minimum Grades 157
401.15.03 Other Requirements 157
401.16 SUB-GRADE PREPARATION 158
401.17 SIGNING AND STRIPING 158
401.18 STREET LIGHTS 159
401.19 STREET NAMES AND ADDRESSES 159
401.19.01 Street Addressing 159
401.19.02 Street Numbering Procedures 160
401.20 MAJOR THOROUGHFARES 162
401.20.01 Process 162
401.20.02 Specifications 163
401.20.03 Maximum Grades and Superelevation 165
401.20.04 Pavement Sections 165

401.20.05 Bikeways 165
401.20.06 Non-Motorized Accommodation 165
402 ACCESS 166
402.01 GENERAL 166
402.02 ACCESS FROM THOROUGHFARE STREETS 166
402.03 ACCESS LIMITATIONS FOR DEVELOPMENT ADJACENT TO THOROUGHFARES 167
402.04 SERVICE DRIVES 168
402.05 MEDIAN OPENINGS 168
402.05.01 Location 168
402.05.02 Design Criteria 168
402.06 BUILDING SETBACKS ADJACENT TO THOROUGHFARES 168
402.07 RESIDENTIAL DRIVEWAY STANDARDS 169
402.07.01 Residential Driveways 169
402.07.02 Driveway Drainage Pipes 169
402.08 NON-RESIDENTIAL DRIVEWAYS 170
402.09 ACCELERATION/DECELERATION LANES/ROADWAY IMPROVEMENTS ALONG EXISTING STREETS 171
402.10 LEFT TURN LANE DESIGN GUIDELINES 171
403 OFF-STREET PARKING FACILITIES 172
403.01 GENERAL DESIGN REQUIREMENTS 172
403.01.01 Street Access 172
403.01.02 Street Access – Curb Cuts in Other than “R” Districts 172
403.01.03 State Highway Department Approval 172
403.01.04 Corner Visibility Clearance 172
403.01.05 Off-Street Automobile Parking 172
403.01.06 Design Standards 172
403.01.07 Location 173
403.01.08 Location and Surface of Parking Areas 174
403.01.09 Required Spaces 174
403.02 FUNCTIONAL ELEMENTS OF ON-SITE CIRCULATION SYSTEM 174
404 SIDEWALKS AND PATHWAYS 174
405 ACCESSIBILITY REQUIREMENTS 175
I. ADOPTION & INCORPORATION BY REFERENCE OF STATE STATUTES. 175
II. SUMMARY OF STATUTORY REQUIREMENTS 176
406 BUS SHELTERS 178
407 STANDARDS FOR LIGHTING 178
408 EASEMENTS 179
408.01 UTILITY EASEMENTS 179
408.02 WATER AND SANITARY SEWER EASEMENTS 179
408.02.01 General Requirements 179
408.02.02 Sanitary Sewer 180
408.02.03 Water Line 180
408.02.04 Quit Claims 181
408.03 DRAINAGE EASEMENTS 181

408.03.01 Storm Drainage 181
408.03.02 Combined Easement for Sanitary and Pipe Storm Drainage ... 182
409 STORM DRAINAGE SYSTEMS..... 182
409.01 GENERAL REQUIREMENTS 182
409.01.01 Applicability and Exemptions 182
409.01.02 Applications/Permit Process..... 182
409.01.03 Inspection 182
409.02 DESIGN CRITERIA..... 183
409.02.01 Storm Drainage System Design 183
409.02.02 Record Drawing..... 186
409.03 STORM WATER MANAGEMENT (DETENTION) 186
409.03.01 Stormwater Hydrologic Methodology 187
409.03.02 Stormwater Quality/Quantity Control Facilities 187
410 WATER AND SEWER..... 190
410.01 APPLICABILITY 190
410.02 OBJECTIVES 190
410.03 SERVICE REQUIREMENTS 191
410.04 GENERAL DESIGN CRITERIA..... 191
410.04.01 Water Service Above 1,150 Ft. MSL 191
410.04.02 Line Extension Requirements 191
410.04.03 Street Cuts 192
410.04.04 Standard Drawings 192
410.04.05 Creek Crossing 192
410.04.06 Cased Bores 192
410.04.07 Requirements for Sewer Capacity Study 192
410.05 WATER 193
410.05.01 Applicability 193
410.05.02 Design Criteria and Standards 193
410.05.03 Water Testing and Inspection 196
410.06 SEWER 196
410.06.01 Applicability 196
410.06.02 Design Criteria..... 196
410.06.03 Sanitary Sewer Design Standards 196
410.06.04 Interceptor Traps Design Standards 198
410.06.05 Dumpster Traps Design Standards 200
410.06.06 Sewer Testing and Inspection 200
411 EROSION CONTROL..... 200
411.01 SOIL EROSION AND SEDIMENTATION CONTROL..... 200
412 FENCES, BUFFERS AND BERMS, MAILBOXES, AND IRRIGATION SYSTEMS 200
412.01 FENCES 200
412.02 BUFFERS AND BERMS 200
412.03 MAILBOXES 201
412.04 IRRIGATION SYSTEMS 201
413 STRUCTURAL RETAINING WALLS..... 201

414 FLOOD DAMAGE PREVENTION 202
415 TIMBER HARVESTING/CLEARING 204
415.01 APPLICABILITY 204
415.02 GENERAL REQUIREMENTS 205
415.03 PERMITTING 206
416 TREE PRESERVATION & REPLACEMENT 208
416.01 DEFINITIONS 209
Buffer 209
Basal Area 209
Caliper 209
Commercial Development 209
Construction Permit 209
Critical Root Zone 209
Density Factor 210
Diameter 210
Director 210
Hardwood Tree 210
High Value Forest 210
Land Disturbance Permit 210
Land Disturbing Activity 210
Overstory Tree 210
Parking Bay 210
Protected Zone 211
Replacement Tree 211
Root Zone 211
Softwood Tree 211
Specimen Tree 211
Street Yard 211
Subdivision 211
Tree 211
Tree Save Area 211
Understory Tree 211
416.02 DENSITY REQUIREMENTS 211
416.02.01 Site Density Factor 212
416.02.02 Existing Density Factor 212
416.02.03 Replacement Density Factor 213
416.02.04 Unique Density Requirements 215
Subdivision Developments 215
Commercial Developments 215
Redevelopment Projects 216
ut parcels to Shopping Centers 216
Subdivision Amenity / Recreation Areas 216
Clearing Only Permits 216
Grading Only Permits 216
Additions to Existing Projects 217

Phased Projects 217
416.03 TREE PRESERVATION STANDARDS 217
416.03.01 Tree Inventories and Surveys 217
416.03.02 Plan Review Standards 218
416.03.03 Construction Standards 218
416.04 TREE REPLACEMENT STANDARDS 220
416.04.01 Planting Specifications 220
416.04.02 Species 220
416.04.03 Parking Lots and Street Yards 221
416.04.04 Irrigation 222
416.04.05 Public Street Rights-of-way 222
416.04.06 Subdivisions 222
416.05 SPECIMEN TREES 222
416.05.01 Identification 222
416.05.02 Preservation 223
416.05.03 Removal, Replacement and Preservation 223
416.06 ALTERNATIVE COMPLIANCE 224
416.06.01 Off-Site Planting 224
416.06.02 County Tree Replacement Fund 225
416.06.03 Parking Lot and Street Yard Requirements 226
416.07 TREE PRESERVATION AND REPLACEMENT PLAN REQUIREMENTS 226
416.07.01 Full Land Disturbance Permits 226
416.08 INSPECTIONS 230
416.08.01 Pre-construction Conference 230
416.08.02 Final Inspection 230
416.08.03 Maintenance Inspection 230
416.09 FISCAL SURETY 231
418 DAMS 231
418.01 PERMANENT POOL IMPOUNDMENTS 231
418.01.01 General Criteria 231
418.01.02 Specific Criteria 235
418.02 TEMPORARY POOL IMPOUNDMENTS 238
418.02.01 General Criteria 238
418.02.02 Specific Criteria 239
419 HISTORIC PROPERTIES 240
419.01 SITE DESIGN 240
419.01.01 Setbacks/Siting 240
419.01.02 Orientation 240
419.01.03 Form/Massing/Height 240
419.01.04 Landscaping/Plant Beds 241
419.01.05 Fences 241
419.01.06 Paving 241
419.01.07 Parking Lots 241
419.01.08 Signs 241

419.02 REHABILITATION OF CONTRIBUTING STRUCTURES 242
419.02.01 General Preservation Policy 242
419.02.02 Establishing the Proper Approach 242
419.02.03 Determining the Contents of an Appropriate Rehabilitation Plan 242
419.02.04 Design Character 242
419.02.05 Change in Use 242
419.02.06 Repairing Original Features 243
419.02.07 Protect and Maintain Existing Significant Stylistic Elements 243
419.02.08 Replacement 243
419.02.09 Alterations 243
419.02.10 Cleaning Methods 243
419.02.11 Roofing Repairs 243
419.02.12 Understanding and Preserving Historic Resources 243
419.03 ADDITIONS TO CONTRIBUTING STRUCTURES 244
419.03.01 Compatible Relationship to Main Building 244
419.03.02 Design 244
419.03.03 Materials 245
419.03.04 Reversibility 245
419.03.05 Preserving Features 245
419.03.06 Roofing Shape 245
420 CEMETERIES 245
421 SWIMMING POOL REQUIREMENTS 246
422 UTILITIES 247
423 CONDOMINIUMS 249
423.01 PROJECT DESIGN 249
423.02 MONUMENTS 249
423.03 EASEMENTS 249
423.04 STREET NAMES 250
423.05 PROPERTY ADDRESS 250
423.06 SIDEWALKS 250
423.07 SUITABILITY OF LAND 250
423.08 UTILITIES 250
423.09 VARIANCES 250
423.10 ZONING OR OTHER REGULATIONS 250
424 GATED COMMUNITIES 250
425 TRADITIONAL NEIGHBORHOOD DEVELOPMENT DESIGN GUIDELINES 253
425.01 CONCEPTUAL MASTER PLAN REQUIRED 253
425.02 TND DEFINED 253
425.03 MIXED-USE VILLAGE DEFINED 254
425.04 INTENT 254
425.05 DESIGN GUIDELINES 254
Design Speed 254
Street types and widths 255

Stopping Sight Distances 255
Vertical Curve Design 256
Centerline Radii 256
Curb Radii 256
Intersection sight triangles 256
Curb Construction 256
Pavement Design 256
Sidewalks and Pedestrians 257
Bicyclists 257
Traffic Calming 257
Transit 258
Street signage 259
On-street Parking 259
Planting Strips and Street Trees 260
Drainage 260
Utilities 261
Lighting 261
Resolution of Conflicts 262
425.06 ADMINISTRATIVE REVIEW CRITERIA 262
425.06.01 Criteria Purpose 262
425.06.02 TND Review Criteria 262
426 COBB COUNTY ARCHITECTURAL DESIGN GUIDELINES FOR COMMERCIAL DEVELOPMENT, REDEVELOPMENT OR BUILDING RENOVATIONS 265
426.01 GOALS & OBJECTIVES 265
426.02 EXPLANATION OF THE POINTS 266
426.03 USE OF GUIDELINES 267
426.04 SUBMISSION OF DESIGN GUIDELINE WORKSHEET 268
426.05 ARCHITECTURAL REQUIREMENTS 268
426.06 SITE PLAN RECOMMENDATIONS 269
426.07 APPEAL OF GUIDELINES 270
426.08 COMMERCIAL BUILDING DESIGN FACTORS WORKSHEET 270
426.09 COBB COUNTY ARCHITECTURAL DESIGN GUIDE..... LINE WORKSHEET **..... 274**
426.10 DEFINITIONS/USE OF TERMS 275
427 URBAN DESIGN STANDARDS 279
427.01 CONCEPTUAL MASTER PLAN REQUIRED 279
427.02 INTENT 279
427.03 URBAN DESIGN POLICIES 279
500 MATERIAL SPECIFICATIONS 281
500.01 APPLICABILITY/EXEMPTIONS 281
500.01.01 Applicability 281
500.01.02 Exemption 281
501 CAST-IN-PLACE CONCRETE 282
501.01 GENERAL 282

501.01.01 Summary 282
501.01.02 Definitions 283
501.01.03 Submittals 283
501.01.04 Quality Assurance 285
501.01.05 Delivery, Storage, and Handling 285
501.01.06 Project Conditions 285
501.02 PRODUCTS 286
501.02.01 Formwork 286
501.02.02 Reinforcing Materials 286
501.02.03 Concrete Materials 287
501.02.04 Miscellaneous Materials and Accessories 288
501.02.05 Liquid Curing Compounds 289
501.02.06 Concrete Mix Design 289
501.02.07 Control of Mix in the Field 290
501.02.08 Concrete Mixing 290
501.03 EXECUTION 291
501.03.01 Concrete Form Preparation 291
501.03.02 Connection to Existing Concrete 291
501.03.03 Vapor Retarder Installation 291
501.03.04 Placing Reinforcement 291
501.03.05 Joint Construction 292
501.03.06 Installation of Embedded Items 292
501.03.07 Concrete Placement 292
501.03.08 Finishing Formed Surfaces 293
501.03.09 Finishing Slabs 293
501.03.10 Concrete Curing and Protection 295
501.03.11 Shores and Supports 295
501.03.12 Removal of Forms and Supports 295
501.03.13 Miscellaneous Concrete Items 296
501.03.14 Concrete Repairs 296
501.03.15 Quality Control Testing During Construction 296
502 PRECAST CONCRETE STRUCTURES 298
502.01 PRODUCTS 298
502.01.01 Precast Concrete Manholes 298
502.02 EXECUTION 299
502.02.01 Installation 299
503 WATER SPECIFICATIONS ..... `300
503.01 PRODUCTS 300
503.01.01 General 300
503.01.02 Ductile Iron Pipe and Fittings 300
503.01.03 Copper Pipe 301
503.01.04 Copper Tubing 301
503.01.05 Gate Valves 301
503.01.06 Air/Vacuum Release Valves 301
503.01.07 Corporation Stops 301

503.01.08 Valve Boxes, Valve Assemblies, Valve Pads 301
503.01.09 Flexible (Transition) Couplings..... 302
503.01.10 Fire Hydrants..... 302
503. 01.11 Curb Stops 302
503. 01.12 Tapping Sleeves 302
503. 01.13 Tapping Saddles 302
503.01.14 Adapters and Unions 303
503.02 EXECUTION 303
503. 02.01 General 303
503.02.02 Connection to Work by Others or Existing Lines 303
503.02.03 Installation 304
503.02.04 Pipe Supports and Thrust Blocks 304
503.02.05 Pressure and Leakage Tests of Underground Pressure Piping . 305
503.02.06 Cleaning Mains 306
503.02.07 Disinfection 306
503.02.08 Final Inspection 307
504 SANITARY SEWER..... 307
504.01 PRODUCTS 307
504.01.01 Ductile Iron Pipe and Fittings 307
504.01.02 Polyvinyl Chloride Pipe 308
504.01.03 Other Pipe Material 309
504.01.04 Transition Couplings 309
504.02 EXECUTION 309
504.02.01 General 309
504.02.02 Connection to Work by Others or Existing Lines 310
504.02.03 Installation 310
504.02.04 Bedding of Sewer Pipe 311
504.02.05 Utility Tracer System..... 311
504.02.06 Testing of Underground Gravity Sewers..... 312
504.02.07 Pressure And Leakage Tests Of Underground Pressure Piping 314
504.02.08 Cleaning Mains 315
504.02.09 Final Inspection 315
505 STORM DRAINAGE..... 316
505.01 MATERIALS..... 316
505.02 INSTALLATION..... 316
505.03 PILINGS 318
505.04 CHANGES..... 318
506 STREETS AND RIGHT-OF-WAY 318
507 STORMWATER QUALITY BEST MANAGEMENT PRACTICES 319
508 RULES FOR ISSUING UTILITY PERMITS – GEORGIA D.O.T. 319
508.01 REQUIREMENTS FOR PERMITS 319
508.02 PERMIT APPLICATION AND APPROVAL PROCEDURE 320
508.03 ALLOCATION OF COSTS..... 321
508.04 LIABILITY AND CONTROL..... 321
508.05 INSURANCE AND BOND 323

508.06 MAINTENANCE 325
508.07 APPROVAL AND NOTICE OF OTHER AGENCIES 326
508.08 EFFECTIVE PERIOD OF TIME 326
508.09 INSTALLATION IDENTIFICATION 327
508.10 COORDINATION OF REQUIREMENTS 327
600 LIST OF STANDARD DETAILS 328

100 GENERAL PROVISIONS

100.01 INTRODUCTION

Since the early 1970s, the original and amended *Standards for Residential and Commercial Development* have undergone revisions by individual agencies/departments/divisions. At this time, these standards are revised to comply with federal, state, regional, and local criteria.

This document illustrates the continued commitment on behalf of the Cobb County Board of Commissioners to encourage quality growth and development in Cobb County. All operating agencies/department/divisions involved in the development plan review process work together to produce this document. These agencies/departments/divisions are:

Community Development Agency

Department of Transportation

Water System

Public Safety Department

Office of Environmental Health

These Development Standards and Specifications have been created, revised, and otherwise set forth as a tool for communication between the County and professional contractors, engineers, architects, developers, planners, builders, and other agents for development. To that end, these Standards are a compilation of the accepted procedures; plan requirements, and approval criteria in the area of land use, site development.

100.2 AUTHORITY

These Standards are adopted and certified by the Cobb County Board of Commissioners under the authority of the Constitution of Georgia (1983) and the Official Code of Georgia and enacted pursuant to such authority.

100.3 TITLE

These Standards shall hereafter be known as “The Development Standards and Specifications of Cobb County, Georgia” and may be generally referred to and known as “Development Standards”.

100.4 INTERPRETATION

For the interpretation and application of Development Standards, all provisions shall be:

- Considered as minimum requirements, which may be varied at the discretion of applicable Agency/Department Directors, unless otherwise governed by ordinance.
- Deemed neither to limit nor repeal any other powers granted under federal and state statutes.
- In the event of conflicting provisions between these provisions and other ordinances of Cobb County, the more specific ordinance shall prevail.

100.5 PURPOSE AND INTENT

100.05.01 Purpose

It shall be the purpose of these Standards to:

Protect and promote the public health, safety, and general welfare of the citizens of Cobb County, Georgia.

Provide maximum livability and quality of life within a neighborhood.

Protect and promote the general welfare of the business community in Cobb County, Georgia, and encourage commerce.

Promote and support the objectives of the Cobb County Comprehensive Plan.

Support and supplement the requirements of the Cobb County Zoning Ordinance.

Streamline the site plan review process by providing clear lines of communication and direction to staff.

Streamline the site plan review process by providing clarification to the development community as to the requirements for development in Cobb County.

Encourage economically sound and technically feasible land development.

Provide assurance that residential, multi-family, and non-residential plans are indeed usable for intended and permitted purposes according to federal, state, regional, and community standards.

Provide assurance that adequate provision for safe and efficient traffic access is available for new development and redevelopments.

Provide adequate water quality, quality, and wastewater treatment.

Assure equitable, efficient, and detailed review of all residential, multi-family, and non-residential construction plans by providing uniform Development Standards for the development and subsequent construction of structures, building, or other improvements of any land within unincorporated Cobb County.

100.05.02 Intent

These Development Standards are intended to address these important needs:

Increased demand for development criteria in response to an ever-increasing environmental awareness.

Improved communication and coordination among County agencies/departments/divisions.

Improved efficiency and better service to the development community.

100.06 AMENDMENTS AND REVISIONS

All amendments and revisions to these standards and specification shall be first approved after a hearing at an advertised called meeting of the Board of Commissioners.

101 ADMINISTRATION

101.01 ADVISORY COUNCIL FOR HISTORIC PRESERVATION

The Advisory Council for Historic Preservation is the lead federal agency charged with the administration, regulation, and protection of national eligible and designated historic sites under Section 106 of the Federal Clean Water Act.

101.02 ATLANTA REGIONAL COMMISSION

The Atlanta Regional Commission (ARC) is responsible for the review, administration of, and permits for the Metropolitan River Protection Act. The ARC also serves as a clearinghouse for comments concerning Development of Regional Impact and the identification and protection of Regionally Important Resources.

101.03 BOARD OF ADJUSTMENTS AND APPEALS

The Board of Adjustments and Appeals is responsible for the issuance of interpretations of the building code when a disagreement arises between the building official and builders, contractors, or subcontractors; approval of requests for variances when alternative construction methods can be shown to provide an equivalent level of safety; rendering of decisions upon actions of the building official, as provided in the building codes, when properly appealed; rendering of decisions in any appeal by a builder, electrical contractor, plumbing contractor; HVAC contractor,

owner, or individual holding a building permit whenever the building official: (i) rejects or refuses to approve a manner of construction; (ii) rejects materials used in construction; or (iii) where it is claimed that the county building or construction codes are inapplicable or that the intent and meaning of the same have been misconstrued or incorrectly applied.

101.04 BOARD OF COMMISSIONERS

The Board of Commissioners is responsible for the development of policies, ordinances, and standards involving the development process. The board hears appeals from aggrieved parties involving all areas not otherwise delegated herein.

101.05 BOARD OF ZONING APPEALS

The Board of Zoning Appeals, appointed by the Board of Commissioners, is responsible for the consideration of variances to the Cobb County Zoning Ordinance, for hearing appeals where it is alleged there is error in any order, requirement, decisions, or determined made by an administrative official in the enforcement of any ordinance or resolution adopted under the Cobb County Zoning and Planning Act of 1964.

101.06 BUSINESS LICENSE REVIEW BOARD

The Business License Review Board, appointed by the County Manager, is responsible for considering appeals regarding decisions made by the Business License Division Manager.

101.07 COBB COUNTY CEMETERY PRESERVATION COMMISSION

The Cobb County Cemetery Preservation Commission is responsible for protection, identification, and recommendations with respect to cemeteries within Cobb County. The Cobb County Cemetery Preservation Commission is also responsible for the administration of the Cobb County Cemetery Preservation Ordinance and recommendations regarding cemetery protection and relocation to the Board of Commissioners or Superior Court, as applicable.

101.08 COBB COUNTY HISTORIC PRESERVATION COMMISSION

The Cobb County Historic Preservation Commission is responsible for the recommendation for designation of historic properties and structures. The Cobb County Historic Preservation Commission is also responsible for the administration of the Cobb County Historic Preservation Ordinance and the issuance of Certificates of Appropriateness.

101.09 COBB COUNTY HOMEBUILDERS ADVISORY BOARD

The Cobb County Homebuilders Advisory Board is charged with the duty of review and make recommendations on matters referred to it by the Board of Adjustments and Appeals.

101.10 COBB COUNTY WATER SYSTEM

The Cobb County Water System is responsible for the operation of water and wastewater facilities with the County. The Water System is charged with the enforcement of federal and state water quality and quantity laws. The Water System is comprised of multiple divisions, each responsible for specific duties.

101.10.01 Administration and Agency Director

The Agency Director is responsible for the daily and long-term overall operation of the Cobb County Water System including oversight of the six divisions of the Agency. The Administration Division includes the Office of the Director, Agency Secretarial Staff, Safety Officer, and the Manager of Administration. The Manager of Administration oversees the Personnel Representative, Support Services, Accounting, and Communications.

101.10.02 Customer Service

The Customer Service Division is responsible for meter reading and repairs, billing for services, and resolution of customer problems in relation to their service bill.

101.10.03 Engineering

The Engineering Division is responsible for the design and construction of new infrastructure, infiltration/inflow studies and testing, and maintaining records and mapping of the infrastructure of work performed by private development or contracted through the Water System.

101.10.04 System Maintenance

The System Maintenance Division is responsible for performing all maintenance to the water and sewer mains and appurtenances, as necessary.

101.10.05 Water Protection

The Water Protection Division is responsible for the operation of the water reclamation facilities and pumping stations and performs industrial monitoring to ensure water quality.

101.10.06 Stormwater

The Stormwater Division is responsible for the maintenance of dedicated and accepted detention/retention ponds, drainage easements on county owned property, and all other stormwater infrastructure not within the right-of-way and for administering and enforcing the Cobb County Comprehensive Stormwater Management Quantity and Quality Ordinance.

101.11 COMMUNITY DEVELOPMENT AGENCY

Community Development is the development-coordinating agency for Cobb County. It is also responsible for implementing federal and state environmental mandates. It advises the Board of Commissioners and the general public on development and planning issues as they affect the environmental, financial, economic, legal, and

social welfare of Cobb County. It has the responsibility to maintain and increase the quality of life in the County as deemed necessary by the Board of Commissioners and County residents.

101.11.01 Administration Division and Agency Director

The Agency Director is responsible for the daily and long-term overall operation of the Cobb County Community Development Agency including oversight of the six divisions of the Agency. The Administration Division includes the Office of the Director, Executive Support Personnel, Personnel Representative, Accounting, and the Subdivision Compliance Administrator.

The Subdivision Compliance Administrator is responsible for review and inspection for compliance with residential subdivision regulations and is charged with enforcement of maintenance and performance construction bonds.

101.11.02 Business License Division

The Business License Division is responsible for collecting appropriate license fees and certain tax monies from businesses operating in the unincorporated area of Cobb County.

101.11.03 Code Enforcement Division

The Code Enforcement Division is responsible for enforcement of the following chapters of the Cobb County Code, as amended from time to time: Chapter 134, Zoning/Sign Ordinance, including issuing of sign permits; and Chapter 102, Solid Waste Ordinance. This division will assist in *issuing citations* ***only*** for the following Chapters of the Cobb County Code of Ordinances, after the appropriate department follows through with the proper notification process: Chapter 18, 18-2, Technical Code Violations; Article VI, Housing; Article VII. Mechanical; Article VIII, One and Two Family Dwelling; Article XI, Unsafe Building Abatement; Article XII, Excavating and Trenching; Chapter 50, Article III, Land Disturbing Activities; Article II, Chattahoochee River Corridor Tributary Protection Area; Article VI, Tree Preservation and Replacement; Chapter 54, Fire Prevention and Protection; Chapter 58, Article II, Flood Damage Prevention; Chapter 66, Historic Preservation; Chapter 106, Streets, Sidewalks, and Other Public Places; Chapter 122, Article II, Water and Wastewater System.

101.11.04 Development and Inspections Division

The Building Official shall be the individual who serves as manager of the Development and Inspections Division of the Community Development Agency as designated by the Board of Commissioners in accordance with Section 102.21 of the Standard Building Code, 1994 Edition, and as may be amended from time to time.

The Development and Inspections Division is the umbrella division for the following sections:

- Building Inspections
- Electrical Inspections
- Mechanical Inspections
- Permitting
- Site Inspections
- Site Plan Review
- Structural Plan Review

The **Building Inspections Section** is responsible for the inspections, field verifications, and implementation and enforcement of structural construction of the developments and issuance of the Certificate of Occupancy as per plans approved the Structural Plan Review Section.

The Building Inspections Section is further charged with the enforcement of the following codes and ordinances:

- CABO I & II Family Dwelling Code
- All Individual Standard Codes

The **Electrical Inspections Section** is responsible for the inspections, field verifications, and all electrical related construction facilities.

The Electrical Inspections Section is further charged with the enforcement of the following codes and ordinances.

- National Electrical Code

The **Mechanical Inspections Section** is responsible for the inspections, field verifications, and all HVAC and plumbing related facilities.

The Mechanical Inspections Section is further charged with the enforcement of the following codes and ordinances:

- Standard Mechanical Code
- Standard Gas Code
- Standard Plumbing Code

The **Permitting Section** is responsible for the processing and issuance of all construction related permits.

The Permitting Section is further charged with the enforcement of the following codes and ordinances:

- Permitting ordinance of the Cobb County Code; all permitting sections of each individual Standard and CABO Codes

The **Site Inspections Section** is responsible for implementation and field inspections of plans reviewed and approved, and issuing grading permits. This section is further charged with responsibilities including soil erosion and sedimentation control compliance, infrastructure installation approval, site enforcement and violations, plan compliance, stormwater implementation, and site inspections.

The Site Inspections Section is further charged with the enforcement of the following codes and ordinances:

- Cobb County Development Standards and Specifications with regard to site inspections
- Soil Erosion and Sedimentation Control Ordinance
- Stormwater Quantity Ordinance

The **Site Plan Review Section** is responsible for reviewing, permitting, and inspecting addendum to construction of developments. The responsibilities include scheduling of preliminary site review conferences, site plan review conferences, tree preservation, address assignments, issuance of Land Disturbance Permits, administration of FEMA flood insurance study and maps, review and approval of hydrologic studies including flood models.

The Site Plan Review Section is further charged with the enforcement of the following codes and ordinances:

- Cobb County Development Standards and Specifications
- Flood Damage Prevention Ordinance
- Cobb County Stormwater Quantity and Quality Ordinance
- Sediment and Erosion Control Ordinance
- Metropolitan River Tributary Protection Act

The **Arborist** is responsible for administering and enforcing the Cobb County Tree Preservation and Replacement Ordinance and Land Disturbance Permit approval limited to tree cutting, clearing and/or clearing and grubbing.

The **Landscape Architect** is responsible for the reviewing all site plans for compliance with buffering requirements and any required landscaping plans.

The **Structural Plan Review Section** is responsible for the review, permitting, and inspection of the structural construction of a development. The responsibilities include scheduling of Preliminary Structural Plan Review Conferences, Structural Plan Review Conferences, and approval of permit applications.

The Structural Plan Review Section is further charged with the enforcement of the following codes and ordinances:

- Standard Building Code
- Standard Mechanical Code
- Standard Gas Code
- Standard Plumbing Code
- National Electrical Code with regard to plan review only

101.11.05 Planning Division

The Planning Division is responsible for the development and maintenance of the Cobb County Comprehensive Plan and the Future Land Use Map that includes existing policy and future land use map.

The **Archaeologist** position has been privatized by the Board of Commissioners. The group or individual selected for the archaeologist position is responsible for site and plan review comments relating to archaeological and cemetery issues.

The **Historic Preservation Planner** is responsible for reviewing all applications for zoning change; site plan approval, variance, and land use permits for impact on historic sites and documented archaeological sites. The Historic Preservation Planner also reviews all applications for certificates of appropriateness for properties listed on the Cobb County Register of Historic Places or within a local historic district. The Historic Preservation Planner is also responsible for administration and enforcement of the Cobb County Historic Preservation and Cemetery Preservation Ordinances. Additionally, the Historic Preservation Planner is the County liaison to the Cobb County Historic Preservation Commission.

101.11.06 Zoning

The Zoning Division is responsible for overseeing the zoning process and site plan compliance for specific sites, as well as maintaining and updating the Cobb County Zoning Ordinance.

101.12 COUNTY MANAGER

The County Manager is the lead administrative official responsible for the operation of Cobb County Government. The County Manager is also responsible for hearing appeals from decisions made by Agency Directors.

101.13 DEPARTMENT OF COMMUNITY AFFAIRS

The Department of Community Affairs is the State agency responsible for the administration, oversight, and review of local building codes, Certification of Qualified Local Governments under the Georgia Planning Act, and is primarily responsible for processing recommendations for Developments of Regional Impact and Regionally Important Resources and properties subject to the Georgia Mountain and River Corridor Protection Act.

101.14 DEPARTMENT OF TRANSPORTATION

The Department of Transportation is responsible for the planning, design, construction, operation, and maintenance of the County's transportation infrastructure including CCT and McCollum Airfield.

101.14.01 Department of Transportation Agency Director

The Agency Director is responsible for administrative functions performed by staff in the Director's office, transportation planning, development review, and construction management. The Agency Director also supervises the managers of DOT'S four additional divisions: Aviation, Engineering, Operations, and Transit.

101.14.02 Aviation Division

The Aviation Division manages the operations, maintenance, and development of Cobb County Airport-McCollum Field in a safe and efficient manner and in compliance with federal rules and regulations, to serve the general aviation transportation needs of the community and contribute to the economic development of Cobb County.

101.14.03 Engineering Division

The Engineering Division is responsible for all engineering and surveying services, as well as all right-of-way operations.

101.14.04 Operations Division

The Operations Division is responsible for the maintenance of roads, bridges, rights-of-way, sidewalks, and drainage structures belonging to Cobb County, along with the implementation, management, and maintenance of traffic control on County roads. These efforts are accomplished on a day-to-day basis, as well as in emergency situations.

101.14.05 Transit Division

The Transit Division contributes to the economic development of the County and to the mitigation of growing traffic congestion, air pollution, and commuting costs through a marketing program that encourages maximum use of public transit and paratransit services, which are provided at a reasonable cost to the County.

101.15 DEVELOPMENT PLAN REVIEW COMMITTEE

The Cobb County Development Plan Review Committee consists of a representative of all agencies/departments/divisions involved in the development process.

- Community Development Agency
- Department of Transportation
- Fire and Emergency Services
- Office of Environmental Health
- Water System

101.16 ENVIRONMENTAL PROTECTION AGENCY

The Environmental Protection is the federal agency involved with environmental review assessment and comments on development and CERCLA.

101.17 FIRE AND EMERGENCY SERVICES

Fire and Emergency Services is a division of the Public Safety Agency, which is responsible for ensuring that construction complies with all State fire laws.

101.18 OFFICE OF ECONOMIC DEVELOPMENT

The Office of Economic Development is responsible for the administration of economic incentives to attract quality business development within unincorporated Cobb County.

101.19 OFFICE OF ENVIRONMENTAL HEALTH

The Office of Environmental Health is a division of the Cobb County Health Department, which is responsible for the enforcement of all State health codes, including on-site sewage management systems and health related issues and permitting.

101.20 PLANNING COMMISSION

The Planning Commission is appointed by the Board of Commissioners and is responsible for the development of the zoning ordinance, official map, Comprehensive Plan, subdivision regulations, and approval of plats of subdivisions.

101.21 STATE AGRICULTURAL DEPARTMENT

The State Agricultural Department is the State Agency responsible in part for review and approval of any cooking process.

101.22 STATE ENVIRONMENTAL PROTECTION DIVISION

The State Environmental Protection Division is the State agency under the Department of Natural Resources responsible for the administration, regulations and permitting under the Federal Clean Air Act, Federal Clean Water Act, Federal Safe Drinking Water Act, and Title 12 of the Official Code of Georgia.

101.23 STATE PRESERVATION DIVISION

The State Preservation Division is the State agency responsible for the review, comments, and protection of eligible and designated historic sites.

101.24 U.S. ARMY CORPS OF ENGINEERS

The U.S. Army Corps of Engineers is the Federal agency responsible for the administration, regulation and protection of Section 404 Wetlands permits under the Federal Clean Water Act.

102 DEVELOPMENT REVIEW PROCESS

102.01 GENERAL

When someone desires to conduct land-disturbing activities, it is necessary to submit site construction documents for review. Cobb County generally does not require a Land Disturbance Permit for individual residential building lots. However, all other forms of land disturbing activities do require such permits. For the purposes of determining compliance with certain provisions of these standards, redevelopment means "a land development project on a previously developed site, but excludes ordinary maintenance activities, remodeling of existing buildings, resurfacing of paved areas, and exterior changes or improvements which do not materially increase or concentrate stormwater runoff, or cause additional nonpoint source pollution." The Site Plan Review Section of the Community Development Agency coordinates the review and approval process for all site construction documents submitted to Cobb County for permitting under this section. It is important that all information requested on the application for plan review is completed. The failure to complete or provide all information may result in delays and/or the requirement of resubmittal of an application. Acceptance of plans by Cobb County shall not constitute or guarantee any rights unless such plans are prepared in accordance with the Development Standards. It is the responsibility of the applicant to ensure the completeness and accuracy of the plans. In the event an application is determined by staff to contain false or misleading information, any permit issued hereunder may be revoked or suspended with penalties assessed. For permitting a structure, a structural plan submittal is necessary as provided in Section 102.04 herein.[1] Additionally, it is advisable that an applicant obtains a sewer availability letter prior to commencing the permitting process. These are several permits/approvals that may not require full review of the development review process. Those permits/approvals and general information regarding the procedure to obtain the permits/approvals are set forth in Section 103.

[1] For certain restoration or remodeling projects and where a site's impervious surface is not increased or altered and where the size and location of the structure is not altered, a Land Disturbance Permit may not be required

102.02 PRE-APPLICATION CONFERENCE

The One Stop Development Process provides the development community the opportunity to meet with representatives from each agency/department/division prior to the production of construction documents in order to obtain data critical to the design of the project. The Pre-Application Conference is scheduled through the Site Plan Review Section for each Thursday. The request for a Pre-Application Conference may be made by applying to the Site Plan Review Section by 4:30 p.m. on Wednesday of the preceding week. Appointment times will be assigned upon a submittal with a properly completed application.

The following information will be required at the time the Pre-Application Conference appointment is requested:

- A preliminary or conceptual site layout plan, if available
- Location of project site:
  - Tax Parcel or Street Address
  - District
  - Land Lot(s)
- Name contact person
- Telephone number where the contact may be reached
- Number of people to attend conference, their names and company affiliation
- The general nature of the information sought from Cobb County agencies/department/divisions
- Type of project being considered

102.03 APPLICATION FOR SITE PLAN REVIEW

Construction documents submitted for Site Plan Review must be presented to the Site Plan Review Section of the Community Development Agency no later than 4:30 p.m. on Wednesday of the week preceding the week of which a Plan Review Conference is desired. Plan Review Conferences are scheduled for every Thursday. Three sets of plans, no larger than 30" x 42", must be provided with one copy of a hydrology study. In addition, a CD with the plan set and hydrology study must be submitted. Detailed parameters for document resolution and labeling can be obtained from the Site Plan Review Section. An individual shall be required to make application on a form provided by the Community Development Agency and to provide the following documents/information:

- An approved preliminary plat (for residential projects) Optional at discretion of applicant.
- Satisfactory results of a fire flow test
- Verification of Erosion/Sediment Control Certification
- An approved method of sewage disposal
- Satisfactory intersection sight distance as approved by the Cobb County Department of Transportation.

- A plan for proper disposal of waste as defined by O.C.G.A. 16-7-51(6), et seq., and as may be amended from time to time, from the clearing and grubbing of trees and vegetation.

All site construction documents, hereafter the "Plan Review Copy", for approval should include the following drawings:

Document	**Section**
Preliminary Plat or Plan	107.02
Grading/Drainage Plan	107.03
Storm Drainage Profiles	107.04
Soil Erosion/Sediment Control Plan	107.05
Landscape/Tree Planting Plan	107.06
Water Layout Plan	107.07
Sanitary Sewer Plan	107.08
Sanitary Sewer Plan/Profiles	107.09
Intersection Site Distance Plan	107.10
Street Plan/Profiles	107.11
Construction Details	107.12
Hydrology Report	107.13

The actual requirements for each of the drawings described above are as set forth further in these Standards.

The maximum allowable size for construction plans shall be 30" x 42". The preparation of construction plans shall include all the applicable information outlined in the Development Standards. The Site Plan Review Section of the Community Development Agency maintains a list of names of staff that assist in the review and approval of the site design plans. Each County Agency/Department/Division involved in the review and approval process can provide a list of data required for complete compliance with the Development Standards.

102.03.01 Site Plan Review Conference

Each project submitted for review is allotted a 30-minute appointment on the Thursday assigned for review before the Plan Review Committee. Appointment times will be scheduled on a first come, first serve basis; however, an effort will be made to schedule consecutive appointments for an applicant's convenience. Comments and recommendations will be discussed during the scheduled meeting. Should any agency/department/division determine that insufficient information, detail, or design

is provided; a project may be required to be resubmitted for a later date. Once documents are resubmitted, an appointment will be rescheduled.

102.03.02 Project Approval

Following completion of the Site Plan Review Conference, an individual shall be required to incorporate all comments and recommendations into a revised set of site plans. Cobb County offers two approval process methods by which a Land Disturbance Permit may be obtained. These are the One Stop Approval Conference and walk-through approval. Both of these are described below. Under either method, eight sets of amended site construction plans must be presented to the individual County Agency/Department/Division for approval and sign-off. Additionally, two copies of the amended hydrology study must be submitted to the Stormwater Management Division and to the Site Plan Review Section. The amended plans must be accompanied by the red-line "Plan Review Copy" of the plans and by the package of comments returned by each agency/department/divisions. Additionally, the agency/department/division shall evidence its approval by signature on the plans. Should these projects fall outside the jurisdictional boundaries of a Cobb County Agency/Department/Division such as Fire, Water, or Sewer, those jurisdictions' approval must be shown on the face of the documents. Upon receiving approval from all agencies/departments/divisions and affected outside jurisdictions, the applicant is granted a Land Disturbance Permit.

102.03.02(A) One Stop Approval Conference

The One Stop Development Procedure provides the opportunity to obtain the signatures of all agency/department/division representatives at one location at a specified time. Requests for appointments for the Resubmittal Conference may be made with the Site Plan Review Section no later than 12:00 p.m. on Friday of the preceding week. Appointment times will be scheduled on a first come, first serve basis. Appointments will be confirmed between 1:00 p.m. and 2:00 p.m. that day for appointments scheduled for the following Monday. The following information will be necessary at the time the request is made for an appointment:

- Project name and Cobb County project number (assigned during the review process)
- Name of contact and telephone number for confirmation
- Name of person to attend the Approval Conference

Appointments will be assigned in 15-minute increments. Some waiting may be anticipated depending on the scope and scale of the projects scheduled earlier. It is important that all parties adhere to the scheduled times to minimize the time necessary to obtain the permit once the plans have begun to be processed. Applicants should make every effort to provide all pertinent information to staff as needed; otherwise this creates delays in the approval process. Cancellations or postponements may require that the plans be approved at a later date by each

agency/department/division. This will require each individual agency/department/ division to review and approve plans by scheduled appointments only.

102.03.02(B) Walk-Through Approval

Projects that are large in scope, those that require specific impact studies, those that contain environmental, historical, or archaeologically sensitive areas are not normally appropriate for the One Stop Approval Conference. (However, these projects may be scheduled if all agencies/departments/divisions are satisfied that all requirements have been met for construction to be permitted. Every attempt will be made to ensure that no project will be scheduled for the Resubmittal Conference that has not met these requirements.) It is the responsibility of the party seeking final approval to ensure that these conditions have been satisfied. For walk-through approvals, appointments should be scheduled with each individual agency/department/division on any business day.

102.03.03 Land Disturbance Permit

Upon receiving approval as outlined above in Section 102.03, a Land Disturbance Permit shall be issued. This permit will allow the applicant to install sediment and erosion control measures shown on the soil erosion/sediment control plan. Some minimal clearing may be required to complete the installation of these devices.

102.03.04 Grading Permit

When soil erosion/sediment control devices have been properly installed, the Site Inspector shall issue a grading permit to the applicant or his/her designee. (Site Inspections Section)

102.04 APPLICATION FOR STRUCTURAL PLAN REVIEW

A Structural Plan Review should be conducted after the grading permit is obtained. As discussed in Section 102.01, a Structural Plan Review may not be necessary in all instances. An application for any type of structural plan review must be filed on the proper form provided by the Structural Plan Review Section of the Development and Inspections Division of the Community Development Agency. The application generally shall include the following:

102.04.01 For Review Only

- The applicant must obtain an appropriate property address from the Site Plan Review Section of The Development and Inspections Division of the Community Development Agency.
- Site Plan Review must verify existing addresses in the project vicinity by field observation.
- Evidence of compliance with Architectural Standards of the American with Disabilities Act of 1990, and as may be amended from time to time.
- Four sets of building plans, as set forth in Section 108.

102.04.02 For Review and Permit

- An approved site plan, as set forth in Section 107.02.
- Cobb County Land Disturbance Permit number.
- Evidence satisfactory to the Business License Division of a valid business license under Georgia law and County requirements.
- Cobb County Contractor's License Number.
- Cobb County Code Compliance Bond in the amount of $10,000 for any building permits.
- Evidence of payment of water and sewer permits (fees).
- Evidence of Fire and Life Safety Code plan requirements, as set forth in Section 108.01.

The following is a list of structural permits and references to requirements of the Structural Plan Review Process:

Permit	Section
Alteration Permit	108.08
Apartment and Condominium Permit	108.05
Demolition Permit	108.15
Fast Track Permit	108.10
Fee Simple Townhouse Permit	108.06
Fire Damage Repair Permit	108.11
Food Service Permit	108.18
Free Standing Building/Addition Permit	108.09
Free Standing Sign Permit	108.13
Mobile Home Permit	108.20
Personal Care Home Permit	108.19
Residential Accessory Structure Permit	108.04
Satellite Dish Permit	108.12
Single Family/Residential Permit	108.03
Structural Retaining Wall Permit	108.17
Swimming Pool Permit	108.16
Temporary Tent Permit	108.14
Tenant Space/Finish Permit	108.07
Tourist Court Permit	108.21

Following review and approval, the Structural Plan Review Section and Fire Marshal may issue a Free Standing Building Permit. All structural plans, except Singe Family Free Standing Structures and accessory structures, will be reviewed by the Cobb County Fire Marshal and the Structural Plan Review Section of the Development and

Inspections Division of the Community Development Agency. Drawings are reviewed on an appointment basis by each agency/department/division; see Section 108 Structural Plan Review Documents. Plans will be considered for review only after a grading permit has been obtained for the site-related construction. A Pre-Application Conference is recommended and may be arranged prior to the issuance of the grading permit.

102.05 EXPIRATION OF APPROVAL

If all construction activity has been discontinued for a period of six months, discontinued shall mean not obtaining a permit which is required in the logical sequence of development, a new permit will be required to continue the project and approval of such construction will be subject to the most current provision of the Cobb County Development Standards and Technical Specifications.

102.06 PLAN REVISIONS/AMENDMENTS

Upon approval of plans, the applicant's project will be inspected for conformance to the approved plans. Inspectors are not authorized to approve field changes that expand, relocate, or delete the construction as described on the approved site plans. Should such changes be desired or made necessary as a result of field conditions, the design engineer should contact the Site Plan Review Section to coordinate approval of the appropriate revision. A minimum of six sets of revised sets of revised site plans must be presented for approval. If the hydrology study has also been revised, two copies must be provided. The agency/department/division whose approval is necessary for the change must be contacted individually for an appointment or a One-Stop Approval Conference may be scheduled, if deemed appropriate. Resubmittal of amendments or revisions must clearly identify the changes or revisions desired. Field changes by the applicant require as-builts to be submitted by the design engineer to the Site Plan Review Section for approval prior to final plat approval.

Drawings that are submitted for revision must specifically identify those areas that are to be considered for review and approval. The revisions should be noted in tabular form in the revision block on the drawings, similar to that shown below. Any time not included in the revision block will not be considered approved even though shown on plans.

REVISION NUMBER	DESCRIPTION OF REVISION	DATE OF REVISION
1		
2		

102.07 TRANSFER OF DEVELOPMENT RIGHTS UNDER PERMIT

Cobb County allows a permit to be transferred from one person/entity to another. Notification of ownership change shall be the responsibility of the recipient.

102.08 VESTING OF RIGHTS UNDER PERMIT

No permit obtained by virtue of incorrect, incomplete, or because of willful or intentional misrepresentation of any fact shall grant the holder thereof any vested rights regardless of when discovery of such error or misrepresentation is discovered.

102.09 SINGLE BUILDING PERMIT

The One Stop Development Process initiated the consolidation of the previous method of issuing a building permit with four supplemental permits. The Single Permitting Process applies to residential and non-residential construction alike. Permits may be obtained only if the builders or contractors can demonstrate that the building site is prepared for the proposed building construction and meets all appropriate development standards and specifications.

103 DEVELOPMENT PERMIT/APPROVALS

Development Permit	Staff	Reference Document(s)
103.01 Administrative Variance	Zoning Division	Cobb County Zoning Ordinance
103.02 Aesthetic Sign Post Permit	DOT	Development Standards
103.03 Americans with Disabilities Act (ADA)	Dept. of Justice	2010 ADA Standards For Accessible Design
103.04 Borrow/Fill Permit	Site Plan Review Section/Zoning Division, Water System, DOT	O.C.G.A.; Cobb County Code
103.05 Burial Disturbance Permit	Zoning Division, Cemetery Pres. Comm., Historic Pres. Planner	O.C.G.A.; Cobb County Code
103.06 Certificate of Appropriateness	Historic Pres. Comm. Historic Pres. Planner	O.C.G.A.; Cobb County Code
103.07 Certificate of Occupancy	Permitting Section, Chief Building Official's Office, Fire Marshal	Cobb County Code
103.08 Chattahoochee River Development Certificate	Zoning Division	O.C.G.A.; Cobb County Code

103.09	Construction and Sales Office Permit	Zoning Division	Cobb County Zoning Ord.
103.10	Conversion of Single Family Residence to Group Day Care Home/Day Care Center	Fire Marshal, Structural Plan Review, Health Dept., Water System	O.C.G.A.
103.11	Dam Permit	Site Plan Review Section, Dept of Natural Resources, Stormwater Mgmt. Division of Cobb County Water System	O.C.G.A.; Development Standards
103.12	Demolition Permit	Permitting Section, Fire and Emergency Services, Water System, Historic Pres. Planner	Cobb County Code
103.13	Development of Regional Impact	Zoning Division, Planning Division, Dept. of Community Affairs, Atlanta Regional Commission	O.C.G.A.
103.14	Driveway Permit	DOT, Zoning Division	Development Standards
103.15	Explosive Permit	Fire and Emergency Services	Development Standards
103.16	Fast Track Permit	Permitting Section, Development Review Committee	Development Standards
103.17	Flood Damage Prevention Permit	Site Plan Review Section	Cobb County Code
103.18	Food Establishment Discharge Permit	Water System Environmental Compliance Division	Cobb County Code
103.19	Food Service Establishment Permit	Office of Environmental Health	Development Standards
103.20	Footings Survey	Permitting Section	Development Standards
103.21	Free Standing Building/Addition Permit	Permitting Section, Structural Plan Review Section, Site Plan Review Section, Zoning Division, Fire & Emergency Services	Development Standards
103.22	Georgia Mountain and River Corridor Act	Site Plan Review Section, Zoning Division	Cobb County Code

103.23 Grading Permit	Development Review Committee, Site Inspections	O.C.G.A.; Development Standards
103.24 House Moving Permit	DOT, Code Enforcement Division, Zoning Division, Board of Commissioners, Water System	Cobb County Zoning Ordinance; Cobb County Code
103.25 Industrial Wastewater Discharge Permit	Water System	Cobb County Code
103.26 Land Disturbance Permit	Development Review Committee	O.C.G.A.; Cobb County Code; Development Standards
103.27 Land Use Permit	Zoning Division	Cobb County Zoning Ordinance
103.28 Mobile Home Permit	Zoning Division, Water System	Cobb County Zoning Ordinance
103.29 Model Home Permit	Director-Community Development Agency, Zoning Division, Water System	Development Standards
103.30 NPDES Permit	EPD, Stormwater Division	Cobb County Code Chapter; GA NPDES-NPS
103.31 On-Site Management System	Office of Environmental Health	Cobb County Code
103.32 On-Site Sewage Management System Repair Permit	Office of Environmental Health	Cobb County Code
103.33 Permanent Road Closure Permit	DOT, Fire Marshal	Cobb County Code
103.34 Personal Care Home	Fire and Emergency Services, Office of Environmental Health, Zoning Division Water System	O.C.G.A.; Cobb County Zoning Ordinance

103.35 Regionally Important Resources	Zoning Division, Planning Division, Dept. of Community Affairs, Atlanta Regional Commission	O.C.G.A.
103.36 Satellite Dish Permit	Zoning Division, Permitting Section	Development Standards; Cobb County Zoning Ordinance
103.37 Section 404 Wetlands Permit	Community Development, Stormwater Management	U.S. Environ-mental Protection agency, Clean Water Act,
103.38 Sewer Connection Permit	Water System	Cobb County Code
103.39 Sign Permit	Permitting Section	Cobb County Code, Sign Ordinance
103.40 Site Plan/Stipulation Amendment	Zoning Division	Cobb County Zoning Ordinance
103.41 Special Exception Use	Zoning Division	Cobb County Zoning Ordinance
103.42 Special Hazard Building Permit	Fire and Emergency Services	O.C.G.A.
103.43 Special Land Use Permit	Zoning Division	Cobb County Zoning Ordinance
103.44 Storage Tank Removal Permit	Fire and Emergency Services	O.C.G.A.; NFIPA Standard
103.45 Storage Tank Installation Permit	Fire and Emergency Services, Structural Plan Review Section	O.C.G.A.; National Electrical Code
103.46 Stormwater Quality/Quantity Permit	Stormwater Division	Development Standards; Cobb County Code

103.47 Structural Retaining Walls Permit	Site Plan Review Section, Water System	Development Standards; Cobb County Code
103.48 Swimming Pool Permit	Office of Environmental Health, Water System	Cobb County Code
103.49 Swimming Pool Discharge Permit	Water System	Development Standards
103.50 Television, Land Mobile, Communication, Microwave and Radio Transmission Antennae and Tower Permit	Zoning Division	Cobb County Zoning Ordinance
103.51 Temporary Road Closure Permit	DOT, Fire Marshal	Cobb County Code
103.52 Temporary Tent Permit	Zoning Division, Structural Site Review Section, Fire Marshal	Cobb County Code
103.53 Tenant Space/Alteration Permit	Zoning Division, Structural Site Review Section, Water System	Development Standards
103.54 Tourist Court Permit	Zoning Division	Development Standards
103.55 Tree Clearing Permit	County Arborist, Site Review Division, Water System	Cobb County Code
103.56 Trenching/Excavation Permit	Structural Plan Review Section	Development Standards; Cobb County Code
103.57 Utilities Permit	DOT Development Review Section, Water System Engineering Division	Development Standards
103.58 Water Impoundment Permit	Office of Environmental Health, Ga. Dept. of Human Resources	O.C.G.A.
103.59 Water Connection Permit	Water System	Cobb County Code
103.60 Water and Sewer Construction Approval	Water System	Cobb County Code

The developer is responsible for obtaining any and all permits and/or encroachments necessary to construct his/her development to include but not limited to permits from the following entities: Cobb County; Georgia DOT; Colonial Pipeline; Railroad; and power, telephone, cable, gas, or any other utility that may require permitting or encroachments.

There are a variety of permits/approvals that Cobb County requires depending on the type of development that may occur. The following below briefly describes the permits/approvals. For additional requirements, please refer to the applicable ordinances and technical specifications.

103.01 ADMINISTRATIVE VARIANCE

Authorization from the Zoning Division Manager to administratively vary nonconforming setback lines or lot size when such nonconformity does not exceed 25% of the existing requirement, was previously conforming, limited to the existing zoning classification, and is the result of a condemnation by any condemning authority or donation of property.

In the event the County or any other lawfully constituted State or Federal governmental authority, agency or body, or utility having the authority of eminent domain condemns property which, as the sole result of such condemnation, creates nonconformity in setback lines or required lot size, the Zoning Division Manager or his/her designee shall be authorized to grant such administrative variances as are necessary to bring the property into conformance upon receipt of a properly documented request. Any variance granted hereunder may not exceed 25% of the existing requirements without application to the Board of Zoning Appeals. Said property must be legally conforming prior to such acquisition in order to qualify for an administrative variance. The Zoning Division Manager or his/her designee shall be required to maintain records that support the basis for granting such variance. Any variance granted hereunder shall only apply to the current zoning district and use. In addition, the Zoning Division Manager or his/her designee shall file a certificate of administrative variance on the deed records of Cobb County, Georgia, evidencing such variance. This shall only apply to property acquired by an authority exercising eminent domain after December 31, 1990.

103.02 AESTHETIC SIGN POST PERMIT

Authorization must be obtained from the Cobb County Department of Transportation to install and maintain aesthetic sign posts. An application is made with the Department of Transportation with approval generally being obtained in two working days. An appeal lies with the Director.

103.03 AMERICANS WITH DISABILITIES ACT (ADA)

Evidence submitted by a registered architect or engineer representing the owner/developer that plans or structures are in conformance with the Americans

with Disabilities Act and the Architectural Barrier Act. Please note, Cobb County does not have enforcement or inspection authority under the Americans with Disabilities Act. Enforcement and interpretation is reserved to the Department of Justice.

103.04 BORROW/FILL PERMIT

Authorization must be obtained from the Zoning Division and the Site Plan Review Section of the Development and Inspections Division of the Community Development Agency to conduct soil and material borrowing and filling operations from one property to another. If the proposed grading requires removal of or filling in of 100 cubic yards or less, no permit shall be required if the property is not subject to and subordinate to federal, state and local regulations such as MRPA, MTRPA, NEPA, FEMA, Sedimentation Control Act and may be adopted or amended from time to time. No permit to borrow or waste soil shall be granted for any parcel of land, unless the plans presented are pursuant to a development plan for ł usage of the property in conformance with the existing zoning. This permitting requirement shall apply to the cumulative impact of all grading operations involving the relocation of more than 100 cubic yards of non-hazardous, inorganic materials, or affecting more than 20,000 square feet of land area. When a borrow/fill permit is required, it shall be subject to and subordinate to other federal, state and local regulations such as MRPA, MTRPA, NEPA, FEMA, and Sedimentation Control Act and may be adopted or amended from time to time.

For each affected property involving more than 100 cubic yards of fill located within Cobb County's jurisdiction the following must be filed and approved prior to commencing borrow/fill activities:

- Boundary survey as set forth in Section 107.01
- Topographic survey with a scale no smaller than 1" = 100'
- The survey must show topography at two foot contour intervals based on mean sea level datum
- A delineation of floodplains/wetlands/cemeteries/historic sites/natural features within the property boundaries (including drainage channels, bodies of water, tributaries showing state mandated buffers and wooded areas)
- All sanitary sewer easements
- Plan and profile of existing sanitary sewer lines, showing existing cover and proposed cover
- All water mains and appurtenances
- Grading plan superimposed
- Soil erosion/sedimentation control plan as defined in Section 107.05
    - The construction exit location must be shown and the designer must certify that the required sight distance is available from the construction exit.
    - Mitigation plan including provision for replanting and stabilization of the site.

The borrow/fill operations shall be subject to inspection and enforcement as any other Land Disturbance Process and Plan Review.

103.05 BURIAL DISTURBANCE PERMIT

Authorization must be obtained from the Cemetery Preservation Commission and Board of Commissioners to disturb or relocate a cemetery pursuant to O.C.G.A. 36-72-1, et seq., and the Cobb County Cemetery Preservation Ordinance. An application, along with evidence of ownership, a genealogical report, plan for relocation, mitigation report, and survey, are filed with the Zoning Division of the Community Development Agency. The staff sets a hearing before the Cobb County Cemetery Preservation Commission who must then render a recommendation within 60 days to either the Board of Commissioners or the Superior Court (depending on whether or not a public agency is involved). A de novo appeal is allowed before the Superior Court within 30 days of a decision.

103.06 CERTIFICATE OF APPROPRIATENESS

Authorization must be obtained by the Cobb County Historic Preservation Commission and the Board of Commissioners, following a public hearing to alter or modify a historic structure or property under the provisions of the Cobb County Historic Preservation Ordinance. An application is filed with the Historic Planner in the Planning Division of the Community Development Agency. An appeal by writ of certiorari lies with the Superior Court of Cobb County. This certificate is only required of local register sites.

103.07 CERTIFICATE OF OCCUPANCY

Authorization must be obtained from the Building Official of the Development and Inspections Division of the Community Development Agency after approval from the Fire Official, if required to occupy or use residential or nonresidential structures. Cobb County has adopted the procedure set forth in Section 110 of the International Building Code, 2006 Edition, and as may be amended from time to time, for issuance and enforcement of Certificates of Occupancy.

103.08 CHATTAHOOCHEE RIVER DEVELOPMENT CERTIFICATE

Authorization must be obtained in the form of a certificate from the Atlanta Regional Commission and the Cobb County Board of Commissioners to develop property located within 2,000 feet of the Chattahoochee River under the provisions of the Metropolitan River Protection Act - M.R.P.A.

An application is made through the Zoning Division of the Community Development Agency, which is forwarded to the Atlanta Regional Commission for review and decision. The normal process takes three 3 months to complete.

103.09 CONSTRUCTION AND SALES OFFICE PERMIT

Authorization must be obtained from the Zoning Division to construct or install a construction or sales office. An application for permit is filed with the Zoning Division of the Community Development Agency. Approval can generally be obtained from the Zoning Division Manager or his/her designee within two days. An appeal lies with the Board of Zoning Appeals.

103.10 CONVERSION OF SINGLE FAMILY RESIDENCE TO GROUP DAY CARE HOME/DAY CARE CENTER

Authorization must be obtained from the Department of Human Resources, Structural Plan Review Section, Building Inspections Section, Zoning Division, Fire Marshal, Water System, and Health Department to convert a single-family residence to a Group Day Care Home/Day Care Center. Approval can generally be obtained from the Structural Plan Review Section within 30 days. An appeal lies with the Board of Zoning Appeals.

103.11 DAM PERMIT

Authorization must be obtained from the Site Plan Review Section of the Development and Inspections Division of the Community Development Agency, Stormwater Management Division of the Cobb County Water System, and the Georgia Department of Natural Resources to construct or maintain a dam (see Section 418 of the Technical Standards by which construction of dams is controlled).

103.12 DEMOLITION PERMIT

Authorization must be obtained from the Permitting Section to demolish a non-historically designated and not otherwise requiring local, state, or federal environment compliance approval structure or building. An application is made with the Structural Plan Review Section of the Development and Inspections Division of the Community Development Agency and must include a sketch of the property that designates adequate off street parking for vehicles associated with the demolition and “roll off” dumpster location. Approval can generally be obtained the same day of application. An appeal lies with the Building Official.

Application must be made to the Water System for termination of water service prior to demolition. Also, the property owner is responsible for having the sanitary sewer service connection terminated at the right-of-way or edge of easement and plugged with a glue joint cap. If the property is served by septic tank, the property owner is responsible for draining the septic tank and properly disposing its contents and removing the tank and associated drain lines, prior to the issuance of the demolition permit. If the property owner plans to rebuild a new structure using the existing septic tank, the tank and associated drain lines should be drained prior to the issuance of the demolition permit.

103.13 DEVELOPMENT OF REGIONAL IMPACT

Authorization must be obtained from the Atlanta Regional Commission (ARC), the Department of Community Affairs of the State of Georgia (DCA) and the Georgia Regional Transportation Authority (GRTA) to proceed with a development of regional impact, which exceeds the thresholds defined by the ARC, DCA and GRTA. Submissions should be made through the Zoning Division of the Community Development Agency and are circulated for comment to the constituent members of the Atlanta Regional Commission and GRTA.

103.14 DRIVEWAY PERMIT

Commercial drives are approved as part of the land disturbance permit process. No separate drive permit is issued. Access to state roads requires a Georgia Department of Transportation Encroachment Permit. Residential drives from a Cobb County Road require authorization from Cobb DOT Operations as part of the street addressing approval process. Approval can generally be obtained in one week. Access to state a road requires a Georgia Department of Transportation Encroachment Permit.

103.15 EXPLOSIVE PERMIT

Authorization must be obtained from the Fire and Emergency Services Division of the Public Safety Department to use explosives. An application is made with the Fire and Emergency Services Division of the Public Safety Department. Approval can generally be obtained the same day. An appeal lies with the Fire Chief/Fire Marshal.

103.16 FAST TRACK PERMIT

Authorization must be obtained from the Permitting Section to begin construction for footing and foundations before the final Free Standing Building Permit can be issued. An application, as required in Section 102, is made with the Permitting Section of the Development and Inspections Division of the Community Development Agency. Approval can generally be obtained the same day. An appeal lies with the Building Official.

103.17 FLOOD DAMAGE PREVENTION PERMIT

Authorization must be obtained from the Site Plan Review Section to allow limited development within and contiguous to floodplain under the following criteria:

- In order to determine that the proposed use conforms to the requirements of this ordinance, the permit for such construction will be issued subject to a plan prepared by a registered professional engineer.
- The applicant must furnish complete and sufficient plans, specifications, hydrological and engineering studies or data necessary to support the following required documents or drawings:
- All buildings located within or adjacent to a flood hazard area shall:

- Be constructed so that the lowest point, including basement, crawl space and foundation wall, is located a minimum of three feet above the base flood elevation, and as may be amended from time to time
- Finished lowest floor elevations shall be shown, referenced to NGVD, the same vertical datum as used for the effective FEMA Flood Insurance Study for Cobb County, on all plans for structures located within or adjacent to a flood hazard area
- Flood-proofing levels will be shown on all plans for new or renovated structures located within a flood hazard area. Flood-proofing plans must be certified by a registered professional engineer
- Construction in or adjacent to Special Flood Hazard Zone A will require establishment of base flood elevation by a registered professional engineer in addition to the above conditions

On structures elevated above the base flood, the lowest horizontal structural member, or part thereof, shall be positioned not less than one foot above the base flood elevation. (Supported columns without cross bracing are excluded.)

No relocations or realignments of river and stream channels shall be allowed which result in an increase of flood elevation either upstream or downstream of the relocation or realignment of any property under different ownership, which is adjacent to the relocation, or realignment. Provisions must be incorporated in the proposal to ensure that adequate stabilization will be provided for the altered watercourse. Approvals must be received from the U.S. Army Corp of Engineers and from the Georgia Department of Natural Resources prior to any alteration or relocation of a watercourse, and evidence of such notification submitted to FEMA. Documents in the form of backwater analysis using methods used by FEMA must be submitted to Cobb County.

Structures shall be designed to prevent flotation, collapse, and damage to nonstructural elements.

The location, design, elevation, and construction of all public utilities and facilities, such as sewer, gas, electrical, water systems, and streets, shall be in such a manner as to minimize or eliminate damage by flooding. Unless a variance is granted, both newly constructed public and private roadways except those requiring a state or federal permit or replacement shall be constructed not less than three feet above the base flood elevation measured at the center line of the road. Roadways shall not be deemed to include a driveway that services only one residence, structure, or property. Newly constructed bridges shall be constructed such that the bottom cord of the lowest horizontal structural member is not less than one foot above base flood.

All developments for manufactured homes must meet the specific requirements of the Flood Damage Prevention Ordinance. Appeals and variances must be submitted

to the Board of Zoning Appeals within 30 days. For additional information see the Flood Damage Prevention Ordinance.

103.18 FOOD ESTABLISHMENT DISCHARGE PERMIT

Authorization must be obtained from the Cobb County Water System for a food service establishment to discharge either directly or indirectly to public sewer. Plans for new establishments must be approved by the Water System's Engineering Division prior to the issuance of a building permit. All food service establishments must obtain a Food Establishment Discharge Permit from the Water System's Environmental Compliance Division prior to opening for business. Food Establishment Discharge Permits must be renewed every three years.

103.19 FOOD SERVICE ESTABLISHMENT PERMIT

Authorization must be obtained from the Office of Environmental Health to operate a food service establishment and signify satisfactory compliance. An application, as presented in 290-5-14, Rules and Regulations for Food Service, Cobb County Board of Health as may be amended from time to time, is made with the Office of Environmental Health, Cobb County Health Department. Approval can generally be obtained within 30 days. An appeal lies with the Cobb County Board of Health.

103.20 FOOTINGS SURVEY

A footings survey is required to be prepared anytime a building footprint (foundation wall) is proposed to be constructed within five feet of any applicable setback. The failure to prepare a footings survey shall be a principal factor in determining whether or not to grant a variance.

On any development, prior to obtaining a building permit, the person requesting the permit or landowner must file a copy of a current plan and survey of the property sealed by a registered land surveyor providing such information as shall be required from the Cobb County Development and Inspections Division or its successor.

Prior to pouring footings, it shall be the responsibility of the builder or developer to accurately and clearly flag all pin corner boundaries or building setback lines prior to any footings inspection. Should the developer or builder desire to place **any** footing within five feet of the applicable building setback line, the builder or developer shall provide a footings (foundation) survey signed by a registered land surveyor showing the footing location and the outer perimeter of the proposed structure. The failure to provide such a footing survey shall be a primary consideration in whether or not the Board of Zoning Appeals may deny a variance application.

103.21 FREE STANDING BUILDING/ADDITION PERMIT

Authorization must be obtained from the Permitting Section, Zoning Division, and Fire and Emergency Services Division to construct a building from the ground up.

103.22 GEORGIA MOUNTAIN AND RIVER CORRIDOR ACT

Authorization must be obtained from the Zoning Division to ensure compliance with the provisions of the Georgia Mountain and River Corridor Protection Act O.C.G.A. 12-2-8. Information must be submitted with any application for development permits on properties which are 2,200 feet or more above mean sea level with a percentage slope of 25% or greater for at least 500 feet horizontally (including all crests, summits and peaks) or any area within 100 feet of both sides of a river as measured from the river banks at mean high water. For more specific information on permitted land uses and limitations see Section 134-283 of the Zoning Ordinance.

103.23 GRADING PERMIT

Authorization must be obtained from the Site Inspections Section to commence grading after a land disturbance permit has been issued, and erosion devices installed and inspected. An application as described in Section 102 of these Development Standards is filed with the Permitting Section of the Development and Inspections Division of the Community Development Agency. See Section 102.03.04 for more complete information.

103.24 HOUSE MOVING PERMIT

Authorization must be obtained after recommendation from the Code Enforcement Division, Zoning Division, and the Department of Transportation, and a letter of water and sewer availability/non-availability from the Water System, and review for an individual on-site septic system, if applicable, from the Office of Environmental Health, by the Board of Commissioners to relocate a structure onto a parcel within Cobb County. An application consisting of proposed route and a site plan is filed with the Code Enforcement Division of the Community Development Agency. A building permit generally may be obtained within five days following approval by the Board of Commissioners.

Authorization must be obtained from the Department of Transportation and Code Enforcement Division in order to move a house through Cobb County involving crossing of jurisdictional boundaries. An application consisting of a proposed route and a State of Georgia Oversize or Over-width Permit is filed with the Code Enforcement Division of Community Development Agency. A permit generally may be obtained within two days.

103.25 INDUSTRIAL WASTEWATER DISCHARGE PERMIT

Authorization must be obtained from the Water System for a significant contributing industry to connect to the sewer system.

103.26 LAND DISTURBANCE PERMIT

Authorization must be obtained from the Site Plan Review Section to install erosion and sedimentation control devices to proceed with clearing and grading after site

plans have been approved by all applicable agencies/departments/divisions for site improvements.

103.27 LAND USE PERMIT

Authorization must be obtained following a public hearing before the Planning Commission and the Board of Commissioners which allows a temporary privilege permit to allow the operation of home occupations or professions in zoning districts where regulations would otherwise prohibit such operations. An application as prescribed by Sections 134-36 and 134-37 of the Zoning Ordinance is filed with the Zoning Division of the Community Development Agency. A public hearing is conducted before the Planning Commission, which makes a recommendation to the Board of Commissioners. An appeal lies with the Superior Court.

103.28 MOBILE HOME PERMIT

Authorization must be obtained from the Office of Environmental Health, Zoning Division, Permitting Section, and Water System to operate any property where two or more mobile homes are parked for residential purposes. An application is made with the Permitting Section of the Zoning Division of the Community Development Agency. Approval can generally be obtained within three days. An appeal lies with the Board of Zoning Appeals.

103.29 MODEL HOME PERMIT

Authorization must be obtained from the Director of the Community Development Agency to construct a model home prior to approval of a final plat. In order for developer/builder to construct a model home prior to approval of a final plat, the following standards shall be met:

Developer of record shall file a written request to the Director of the Community Development Agency requesting model home permits utilizing the attached Model Home Permit Request Form. The maximum is four model home permits at any given time per entire development.

MODEL HOME PERMIT REQUEST

Name of Subdivision: _____

Land Lot(s): _____ District(s): _____

Lot Numbers(s) and Address(s): _____

Note: No more than <u>four</u> model home permits are allowed for entire development.

I, _____ of _____

Your Name (Please Print) **Company Name (Please Print)**

acknowledge that the model home(s) shall not be connected to the water and sanitary sewer mains until the final plat has been recorded, the model home(s) shall not be sold or leased for occupancy until final plat has been recorded and certificate of occupancy granted, the model home(s) are located not more than 500 feet from the nearest operational fire hydrant and paved public right of way, and that adequate water pressure and fire flow are available to the model home(s) requested.

As an authorized agent/officer of the above referenced company and by my signature I also agree to hold harmless and indemnify Cobb County Government from any and all liability for personal injuries, real property damage, personal property damage or for loss of life resulting from or in any way connected to the approval or issuance of this permit. This agreement is binding on the heirs, successors, and assigns of the parties hereto.

When the final subdivision plat is recorded the permit must be revised immediately so that the address can be added to the permit and additional requirements and/or approvals can be verified, including proof of payment for water/sewer. A Certificate of Occupancy will not be issued until the permit is revised.

I have read this entire document, understand it fully, and sign it voluntarily.

_____ _____

Signature Required Date

_____

Print telephone, pager or contact number

FOR OFFICIAL USE ONLY

Approved: _____ Approved w/Modifications_____ Rejected: _____

Comments: _____

_____

Site Inspectors comments:

- **Does this project have new streets or lots along existing county road** ☐ **New** ☐ **Existing**
- **Is curb and stone base installed throughout project** ☐ **Yes** ☐ **No**
- **Is water line installed and active or is there an active hydrant within 500'** ☐ **Yes** ☐ **No**
- **Does approved plan show a site plan requirement for requested lots** ☐ **Yes** ☐ **No**

103.30 NPDES PERMIT

Applicant shall comply with all applicable State and Federal NPDES permitting requirements to operate a wastewater or stormwater discharge into waters of the United States.

103.31 ON-SITE SEWAGE MANAGEMENT SYSTEM

Authorization must be obtained from the Office of Environmental Health for installation of a new on-site sewage management system. An application, as prescribed in the Rules and Regulations for On-Site Sewage Management Systems, Cobb County Board of Health as may be amended from time to time, is made with the Office of Environmental Health. An appeal lies with the Cobb County Board of Health.

103.31.01 General

A major factor influencing the health of individuals where public or community sewerage is not available is the proper treatment and disposal of human wastes and other sewage, including industrial and processing waste. Basically, to accomplish satisfactory results, all such wastes must be disposed of so that:

- They will not contaminate any drinking water supply.
- They will not give rise to a public health hazard by being accessible to insects, rodents, or other possible carriers of disease, which may come into contact with food or drinking water.
- They will not give rise to a public health hazard by being accessible to children.
- They will not violate laws or regulations governing water pollution or sewage disposal.
- They will not pollute or contaminate the waters of any bathing beach, shellfish breeding ground, or stream used for public or domestic water supply or for recreational purposes.
- They will not give rise to a nuisance due to odors or unsightly appearance.

Where public or community sewage disposal systems are not accessible, these criteria shall be met by the discharge of sewage to an adequate on-site sewage management system. The purpose of these rules and regulations is to establish minimum standards governing the construction and repair of on-site sewage management systems and the inspection thereof; requiring the submission and approval of plans prior to construction of said systems; and providing the enforcement of these regulations.

103.31.02 Applicability/Exemptions

These rules shall have application except in the following cases:

- To any facility or system under the jurisdiction of and regulated by the Department of Natural Resources or its successor, under the Georgia Water Quality Control Act or the Solid Waste Management Act or their successors;
- To any public or community sewage treatment system.

103.31.03 Subdivision Development Utilizing On-Site Sewage Management Systems

Written approval must be obtained from the Cobb County Water System prior to submitting plans to Community Development or to County Board of Health.

Written approval must be obtained from the County Board of Health prior to beginning the physical development of a subdivision.

Developers are strongly advised to seek a predevelopment review prior to purchasing property or making substantial monetary outlays for development improvements. Tentative approval may be obtained by submitting the following:

- A letter from a County or city water system official stating that public sewerage is not available.
- Vicinity map, to include lot dimensions and designations.
- A level three or greater soil map and soil descriptions from investigations conducted by a certified soil classifier.

For final review and approval, the following requirements must be met:

- A letter from a County or city water system official stating that public sewerage is not available.
- Complete the Subdivision Analysis Record provided by the County Board of Health.
- Preliminary plat (two copies) showing topography on two-foot contours, soil mapping and location of test holes.
- Description of various soils and test holes, as depicted on the preliminary plat, by a certified soil classifier. Each lot must have a minimum of one soil boring. Additional borings or testing may be required for marginal lots.
- Three copies of the proposed final plat with the proper certification statement.
- Preliminary plan review fees paid.
- Front and rear corners of each lot staked and marked; side lines flagged.

Allow ten working days for review.

After review, the developer will be notified that each lot must be designated as one of the following categories on the final recorded plat:

- OUT - means currently unsuitable for an on-site sewage management system.
- SP - (Site Plan) means approval of a detailed individual site plan required prior to issuance of a permit.
- SPA (Site Plan Alternative) means approval of a detailed individual site plan utilizing an alternative on-site sewage management system required prior to issuance of a permit.

103.31.04 Subdivision Lot On-Site Sewage Management System Permit

- Complete an application form provided by the County Board of Health.
- A letter from a County or city water system official stating that public sewerage is not available.
- Pay applicable site review fees prior to site review conference and permit fee prior to the issuance of the permit.
- Residential development in subdivisions approved as listed above.

Plot Plan Lot Requirements:

- A plat drawn to a scale of 1:40 or larger depicting property lines and dimensions.
- Footprint (shape) and location of house or other structures.
- Location of driveway and turnaround.
- Location of wells and/or water service line.
- Location and elevation of building sewer pipe (stub-out).
- Location and sizes of septic tank and absorption field including location of replacement absorption field.
- Number of bedrooms.

Site Plan Lot Requirements:

- All requirements for a plot plan lot must be met; however, site plans must be drawn by a qualified individual utilizing a 1:20 scale. Up to a 1:40 scale may be utilized on lots larger than one acre.
- Soil mapping shall be depicted on plan.
- Topographic lines in two-foot contours showing existing and finished grades.
- Location and actual elevation of house sewer (stub-out) invert.
- Actual floor elevations of main floor and basement.
- Location of streams, ponds, swimming pools, tennis courts and other pertinent structures present on the property.

Residential Development in older existing subdivisions:

- Provide a current letter from a County or city water system official stating that public sewerage is not available.

- Should adequate soil information not be on file, a level three or greater soil map and soil descriptions from investigations conducted by a certified soil classifier.
- Submit a plat meeting the requirements for a plot plan lot delineated above and any other information that may be required.

Non-residential Development: On-Site Sewage Management System Permit

Written approval must be obtained from the Cobb County Water System prior to submitting plans to Community Development or to County Board of Health.

- A plat of the property should be taken to the Site Plan Review Section of the Cobb County Development and Inspections Division to have an address assigned.
- A sewer non-availability letter is required from the County or city water system.
- A soil map and soil description from investigations conducted by a soil expert.
- Plans and specifications shall be prepared by a design professional, such as a registered engineer or architect, licensed by the State of Georgia and shall bear the stamp of the property.
- Calculations relating to the design of the system shall show the maximum daily wastewater usage (gallons/day); and all mathematical calculations and supporting data used in sizing the septic tank and absorption field. Systems shall be designed using the maximum daily wastewater usage and the highest percolation rate measured. Because of general soil characteristics in the County systems, it shall be designed on a percolation rate of no faster than 45 minutes per inch.
- A floor plan showing the location, number, and types of sanitary fixtures should be provided.
- Three copies of a detailed site plan, drawn to 1:40 or larger scale, showing the following information:
  - Property lines and location of buildings, driveways, parking areas, streams, ponds, drainage ditches, easements and floodplains.
  - The locations of wells within 500 feet of the property.
  - The locations of soil test holes.
  - Existing and finished grades at 2-foot contours.
  - Elevations of finished floors and building sewer (stub-out) invert.
  - Location and size of septic tank and absorption field including replacement absorption field.
  - Where an existing system is to be utilized an evaluation of the system shall be performed to indicate its suitability for treating the anticipated maximum daily wastewater flow. The existing system shall be plotted on the site plan.

103.31.05 Lot On-Site Sewage Management System

A plat of the property should be taken to the GIS Section of the Planning Division of the Cobb County Community Development Agency to have an address assigned.

A sewer non-availability letter is required from the County or city water system.

A level three or greater soil map and soil descriptions from investigations conducted by a certified soil classifier.

A certified plat with a plan meeting the requirements for a plot plan delineated in Sub-Division On-Site Sewage Management (Septic Tank) Permit, and any other information that may be required.

103.31.06 Water Permit for Single Family Dwelling or Commercial Development Utilizing a Septic Tank

Acquire a street address from the GIS Section of the Planning Division of the Cobb County Community Development Agency.

Acquire a letter of non-availability from the Water System Engineering and Records Division.

Make application for water permit at Water System Customer Service Division and pay fees.

Acquire a septic tank permit from the Office of Environmental Health of the Cobb County Health Department.

103.31.07 Inspections

No person may cover or use a new on-site sewage management system or cover repair work made to an existing on-site sewage management system, except as provided above until final inspection has been made by the County Board of Health to determine compliance with the provisions of the construction/repair permit issued; and written approval has been issued by the County Board of Health.

Calls for inspections shall be made to the Cobb County Health Department between the hours of 8:00 A.M. to 9:00 A.M. or 12:00 noon to 1:00 P.M. the day the inspection is desired. Sufficient time shall be allowed for completion of the job before requesting inspection to insure that the job will be ready when the inspector arrives. The inspector will not be required to wait for the completion of the job. Some responsible person shall be present to assist the inspector in checking the installation.

- Excessive water or rock formation in an absorption trench will result in disapproval of the line.

- A copy of the final inspection of an on-site sewage management system shall be provided to the owner, builder, developer, or agent, whichever is appropriate. *****
- Any grading, filling, or other landscaping or construction activities on the lot subsequent to final inspection by the County Board of Health which may adversely affect the on-site sewage management system shall render the approval void.

103.31.08 Administration and Enforcement Variance

These regulations shall be administered by the County Board of Health, which shall have the authority to grant a variance from the requirements of these regulations as follows:

Where it is demonstrated to the satisfaction of the County Board of Health that strict compliance with the standards would result in practical difficulty to or undue hardship upon the property owner due to special conditions or causes;

- Where the public or private interest in the granting of the variance is found by the County Board of Health to clearly outweigh the interest of the application of uniform rules; and,
- Where such alternative measures are provided which in the opinion of the County Board of Health will provide adequate public health and safety protection.
- In granting a variance, the County Board of Health may attach thereto any conditions that may be deemed advisable so that the purpose of these regulations will be served; and public health, safety and welfare secured.

Appeals of administrative decisions shall be made to the Executive Officer or the Cobb County Board of Health.

The administration and enforcement of these rules and regulations shall be prescribed in the Official Code of Georgia, Annotated Chapter 31-5.

103.32 ON-SITE SEWAGE MANAGEMENT SYSTEM REPAIR PERMIT

Authorization must be obtained from the County Office of Environmental Health for repair of an on-site sewage management system after the first 12 months of installation. An application, as prescribed in the Rules and Regulations for On-Site Sewage Management Systems, Cobb County Board of Health as may be amended from time to time, is made with the Office of Environmental Health. Approval can generally be obtained within 7 days. An appeal lies with the Cobb County Board of Health.

103.33 PERMANENT ROAD CLOSURE PERMIT

Authorization must be obtained following public hearing by the Board of Commissioners to permanently close and abandon a road or right-of-way. An

application is filed with the Right-of-way Section of the Department of Transportation. Approval can generally be obtained within 30 days. An appeal lies with the Superior Court.

103.34 PERSONAL CARE HOME

Authorization must be obtained from the Office of Environmental Health, Zoning Division, and Fire and Emergency Services to operate a building, a group of buildings, a facility, or place in which is provided two or more beds and other facilities and services, pursuant to O.C.G.A. 31-7-12, and as amended from time to time. Depending on the nature of the activity a Special Land Use Permit or Land Use Permit may be required. Applications, consisting of a land use permit/special land use permit in accordance with 134-26 of the Zoning Ordinance, must be filed with the Zoning Division of the Community Development Agency and the Office of Environmental Health of the Cobb County Board of Health, and Water System respectively. On-site sewage management systems may not be adequate and connection to public sewer may be required. The process normally takes three months.

103.35 REGIONALLY IMPORTANT RESOURCE

Authorization must be obtained from the Georgia Department of Community Affairs to develop a project, which may have a significant effect on natural or historic resources within the Atlanta Region.

103.36 SATELLITE DISH PERMIT

Authorization must be obtained from the Permitting Section of Development and Inspections Division to install a satellite dish. An application, consisting of two site plans signed and sealed by a licensed Georgia registered engineer in accordance with 107.01 of the Development Standards and, footing detail for any ground mounted dish, is made with the Permitting Section of the Development and Inspections Division of the Community Development Agency. Approval can generally be obtained within one day. An appeal lies with the Board of Zoning Appeals.

103.37 SECTION 404 WETLANDS PERMIT

Authorization must be obtained from the U.S. Army Corps of Engineers to impact or affect wetlands. An application, including a proposed delineation of wetlands and a plan for mitigation or avoidance environment assessment of impact statement must be made for nationwide permit, categorical exclusion, or local permit with the U.S. Army Corps of Engineers. Depending on the complexity of comments received from various jurisdictions and individuals, including SHPO, EPA, EPD, U.S. Fish and Wildlife, Advisory Council of the Office of Historic Preservation, a permit could take in excess of six months to obtain.

103.38 SEWER CONNECTION PERMIT

Authorization must be obtained from the Cobb County Water System to connect to public sewer.

New Subdivision, Non-Residential Development, and Multi-Family Residential Development:

Authorization to connect the development to public sewer will be granted through the Cobb County Plan Review process. Applicable Sewer Development Fees must be paid prior to connection. The Water System shall inspect and approve the connection.

Non-Residential Tenant Build Out

This section applies to units in non-residential developments which will exceed water usage of 400 gpd as listed in the Cobb County Water System Sewer Development Fee Flow Calculation (see Section 600).

The process for obtaining an occupancy permit (CO) is as follows:

- Acquire an Official Address Notification (OAN), including suite number if applicable, from the GIS Section of the Planning Division of the Cobb County Community Development Agency.
- Plans must be approved by the Water System's Engineering Division and applicable Sewer Development Fees must be paid to the Water System.
- Obtain a permit, if applicable, from Community Development.

Single-Family Residential

The process for obtaining authorization to connect a single family residential property to public sewer is as follow:

- Acquire a street address from GIS Section of the Planning Division of the Cobb County Community Development Agency
- Acquire a letter of availability from the Water System Engineering and Records Division.
- Pay applicable Sewer Development Fees, Tap Fees, and Sewer Extension Fees to the Water System.
- Obtain a Single Building Permit (new construction) or plumbing permit (existing home).
- Obtain an inspection and approval of the connection from the Building Inspections Section of the Community Development Agency. An affidavit in a form provided by the Community Development Permitting Section may be submitted by a state licensed plumbing contractor to the Building Inspections Section to obtain approval in lieu of Building Inspections conducting the inspection.

103.39 SIGN PERMIT

Authorization must be obtained from the Permitting Section of the Community Development Agency to erect a sign. An application, consisting of a plat identifying the lot of record and plan specification and showing all water, sanitary sewer mains or storm drains and appurtenances, is filed with the Code Enforcement Division of the Community Development Agency. A sign permit may generally be obtained the same day.

103.40 SITE PLAN/STIPULATION AMENDMENT

Authorization must be obtained from the Zoning Division Manager and Board of Commissioners to effect proposed minor modifications, which do not alter or conflict with the basic intent of a site-specific plan. See Cobb County Zoning Ordinance 3-28-8.8 for more details.

103.41 SPECIAL EXCEPTION USE

Authorization must be obtained by the Zoning Division Manager to sign off on proposed development or use upon meeting certain requirements as set forth in 134-271 of the Zoning Ordinance.

103.42 SPECIAL HAZARD BUILDING PERMIT

Authorization must be obtained from the State Fire Marshal, Local Fire Marshal, or State Inspector for any Special Hazard Building as defined by O.C.G.A. 25-2-13, and as amended from time to time prior to the issuance of any building permit, specifically, and without limitation these include the following:

- Buildings more than three stories in height
- Residential structures for three or more families greater than three stories in height
- Any building with more than 15 sleeping accommodations for hire
- Schools or academies with more than 15 children
- Hospitals, health care, nursing centers, and schools (State Fire Marshall)
- Racetracks, stadiums, and grandstands
- Theaters, auditoriums, restaurants, bars, lounges, night clubs, and public assembly of 300 or more, or 100 or more where alcohol is served
- Church with occupant load of 500 or more
- Department or retail stores in excess of 15,000 square feet
- Group day care and day care centers where more than 6 children are kept
- Licensed personal care homes
- Landmark buildings

An application, consisting of plans for Structural Review involving any Special Hazard Building, must first be submitted to the State or Local Fire Marshal for review and approval prior to applying for a Free Standing Structural Permit.

103.43 SPECIAL LAND USE PERMIT

Authorization must be obtained from the Board of Commissioners and processed by the Zoning Division, which allows a privilege permit for land uses, usually requiring a State of Georgia or Federal permit in zoning districts where regulations would otherwise prohibit such operation. An application as prescribed by Section 134-37 of the Zoning Ordinance is filed with the Zoning Division of the Community Development Agency. A public hearing is conducted before the Planning Commission, which makes a recommendation to the Board of Commissioners. An appeal lies with the Superior Court.

103.44 STORAGE TANK REMOVAL PERMIT

Complete a Georgia Underground Storage Closure Activity Form (GUST), obtained from the Georgia EPD. A permit must then be obtained from the Cobb County Fire Marshal and the Georgia EPD prior to the removal of above ground and underground flammable or combustible liquid tanks. In the event that a tank(s) removal requires soil and material borrowing and filling, said activity shall be subject to the borrow/fill permit provisions in Section 103.04.

103.45 STORAGE TANK INSTALLATION PERMIT

Authorization must be obtained from the Zoning Division prior to submitting plans to the Cobb County Fire Marshal's office. The plan shall then be submitted to the State Fire Marshal, and in some cases, the Georgia EPD to install an above ground or underground flammable or combustible liquids tank.

103.46 STORMWATER QUALITY/QUANTITY PERMIT

Authorization must be obtained from the Stormwater Division of the Cobb County Water System to control, retain, or detain stormwater to/from a development site.

Approval for Stormwater Quantity and Quality is granted with the Land Disturbance Permit for Full Site and Grading Permits referenced thereto for all projects properly permitted at Cobb County Community Development Agency. If Community Development discovers unusual circumstances relative to stormwater, comments may be requested from Stormwater Management prior to issuing the Full Site or Grading Permit.

Any person or entity who elects to modify any storm drainage system which has been properly platted, dedicated, inspected, and accepted by Cobb County for perpetual maintenance must submit documents and calculations sufficient to prove full and complete compliance with all codes and regulations to the Site Plan Review Section of Community Development. At such time as the proposed changes or modifications have been found by Site Plan Review to be compliant with those applicable codes and regulations, Site Plan Review may grant approval for the proposal contingent upon proper installation, passing inspection by Site Inspections, and the re-recording of the subdivision final plat properly annotated with the modification as installed. Costs for any surveys, revisions to plat, and re-recording

shall be borne by the property owner/applicant. This procedure for re-recording of the subdivision final plat shall be followed in those cases where the County accepts responsibility to perform the actual work and the drainage easement must be modified to cover the work.

Where Community Development concurs that the proprietary final plat is not accessible from the RLS or PE who owns same, then Community Development may grant the re-recording of the final plat in the form of a referenced survey plat of the individual lots affected by the storm drainage system modification.

103.47 STRUCTURAL RETAINING WALLS PERMIT

Authorization must be obtained from the Site Plan Review and Structural Plan Review Sections to construct a structural retaining wall designed to reinforce or retain a permanent grade slope with an incline steeper than one foot vertical for every two feet of horizontal displacement. An application is made with the Site Plan Review Section of the Development and Inspections Division of the Community Development Agency and the Water System. If retaining walls are approved in conjunction with another approved permit, this permit shall not be required. Approval can generally be obtained within three days. An appeal lies with the Building Official.

103.48 SWIMMING POOL PERMIT

Authorization must be obtained from the Office of Environmental Health, Building Inspections Section, and the Water System to construct, alter, reconstruct, or operate a public swimming pool. An application is made with the Permitting Section of the Development and Inspections Division of the Community Development Agency (construction and operational) and the Office of Environmental Health. Approval can generally be obtained within 30 days. An appeal lies with the Cobb County Board of Health.

103.49 SWIMMING POOL DISCHARGE PERMIT

Authorization must be obtained from the Office of Environmental Health, Cobb County Water System, and the Building Inspections Section to discharge backwash or swimming pool water from a public pool onto any private or public lands. An application is made with the Office of Environmental Health and Permitting Section of the Community Development Agency. Approval can generally be obtained within 30 days. An appeal lies with the Cobb County Board of Health.

103.50 TELEVISION, LAND MOBILE, COMMUNICATION, MICROWAVE, RADIO TRANSMISSION ANTENNAE AND TOWER PERMIT

Authorization must be obtained from the Zoning Division and Board of Commissioners (in the event a Special Land Use Permit is required) to construct, install, and maintain a television, land mobile, communication, microwave, or radio transmission antennae or tower. Approval may generally be obtained within 90 days. An appeal lies with the Superior Court.

103.51 TEMPORARY ROAD CLOSURE PERMIT

Authorization must be obtained from Cobb County Department of Transportation and the Fire Marshall to temporarily close a road and install signs to divert traffic to a detour route. An application is made with the Operations Division of the Cobb County Department of Transportation for all county roads and with the Georgia Department of Transportation for all state roads. Approval can generally be obtained in five (5) days. An appeal lies with the County Manager.

103.52 TEMPORARY TENT PERMIT

Authorization must be obtained from the Zoning Division, Permitting Section and the Fire Marshal to erect a tent for a maximum of 14 days, unless an extension is granted by the Zoning Division and the Permitting Section. This provision shall not apply to tents used for personal recreation. An application consisting of: 1) proof of tent's flame retardant compliance; 2) proof of liability insurance; 3) notarized letter of property owner/agent's approval for locating tent; and 4) business license (unless 501(c) charitable organization) is made with the Permitting Section and the Zoning Division of the Community Development Agency. Approval can generally be obtained within five to seven business days. An appeal lies with the Board of Adjustments and Appeals.

103.53 TENANT SPACE/ALTERATION PERMIT

Authorization must be obtained from the Zoning Division, Permitting Section, and Fire Marshal (for restaurants - Office of Environmental Health and Water System; for hair salons and coin operated laundries - Water System) to remodel, renovate, alter, repair, restore, or for maintenance to an existing structure or building. An application, consisting of four to five sets of plans with sealed drawings by a registered architect or engineer on projects costing in excess of $100,000 and a Code Compliance Bond, is made with the Permitting Section of the Development and Inspections Division of the Community Development Agency. Approval can generally be obtained within ten business days. An appeal lies with the Board of Adjustments and Appeals.

103.54 TOURIST COURT PERMIT

Authorization must be obtained from the Office of Environmental Health, Zoning Division, and Permitting Section to operate a facility consisting of two or more rooms or dwelling units providing lodging and other accommodations for tourists and travelers. This includes tourist courts, tourist cottages, tourist homes, trailer parks, trailer courts, motels, motor hotels, hotels, and any similar place by whatever name called and any food, beverage, laundry, recreational, or other facilities or establishments operated in conjunction therewith. An application is made with the Permitting Section of the Zoning Division of the Community Development Agency and the Office of Environmental Health. Approval can generally be obtained within two days. An appeal lies with the Board of Adjustments and Appeals.

103.55 TREE CLEARING PERMIT

Authorization must be obtained from the County Arborist or his/her designee to clear or remove tree(s) from property when no site construction is proposed or plans have not been approved through the Development Review Process. An application for a land disturbance permit for clearing or clearing and grubbing as described in these Standards shall be in accordance with the current Development Review Process set forth in Section 102 herein and in Section 3-6-111 in the Erosion and Sedimentation Control Ordinance or otherwise established by the Community Development Agency or its subsequent equivalent. The application shall require a certification from the Tax Assessor's Office that all taxes on the property are current and adequate provision for payment of timber taxes be made.

In addition to requirements of Section 3-6-111 of the Erosion and Sedimentation Control Ordinance, plans for tree cutting shall include the following:

- Boundary survey as set forth in Section 107.01;
- Topographic survey with a scale no less than 1"=100';
- Locations and dimensions of any logging decks;
- Locations and dimensions of any Stream Management Zones;
- Locations of any haul roads;
- Locations and dimensions of gravel entrance pads;
- Limits of tree cutting activities;
- Locations and design details of any stream crossings showing approximate width of crossing (bank to bank) and method of crossing (rock rip-rap or culvert);
- Locations and descriptions of all affected forest cover-types;
- Locations and descriptions of all buffers;
- A detail of the method to be used to delineate buffers on the site;
- Any additional information as may be required by Cobb County Staff to perform a proper review of the project and assure the intent of the Erosion and Sedimentation Control Ordinance is met;
- All sanitary sewer easements;
- All water mains and appurtenances; and
- All drainage easements.

An appeal will lie with the Director of the Community Development Agency. See Section 415 of these Standards for Technical Standards.

103.56 TRENCHING/EXCAVATION PERMIT

Authorization must be obtained from the Permitting Section of the Community Development Agency to dig a trench/excavate over four feet deep. An application is made with the Building Section of the Development and Inspections Division of the Community Development Agency. Approval can generally be obtained the same day. An appeal lies with the Building Official.

Excavations and trenching shall comply with Code of Cobb County, Article 11, Section 3-6-144.

Ditches over five feet deep shall be sloped, shored, sheeted, braced, or otherwise supported.

No equipment operator or supervisory personnel shall participate in any excavation or trenching or in any way work in an excavation or trench unless such person holds a valid certificate from Cobb County evidencing satisfactory completion of a required educational program on safe trench/excavation practices provided by Cobb County. No other person shall participate in or work in any excavation or trenching site unless a certificate holder is present at the excavation or trenching site where work is being performed.

103.57 UTILITIES PERMIT

Authorization must be obtained from the Development Review Supervisor in the Department of Transportation to construct utilities within county right-of-way and from the Georgia Department of Transportation to construct utilities within state right-of-way. A permit application is submitted to the Development Review Supervisor of the Department of Transportation. An appeal lies with the Director of the Department of Transportation.

Acquire a street address from the GIS Section of the Planning Division of the Cobb County Community Development Agency, if property is not platted.

103.58 WATER IMPOUNDMENT PERMIT

Authorization must be obtained from the Office of Environmental Health and the Georgia Department of Human Resources to construct and maintain a water impoundment of 1/10 acre or more. Exemptions include sewage lagoons, oxidation ponds, and sewage holding ponds, which are regulated by the Georgia EPD. An application, as prescribed in Rules and Regulations Governing Mosquito Control and other Measures on Impounded Waters, Georgia Department of Human Resources as may be amended from time to time, is made with the Office of Environmental Health. A permit may generally be obtained within 14 days. An appeal lies with the Georgia Department of Human Resources.

103.59 WATER CONNECTION PERMIT

Authorization must be obtained from the Cobb County Water System to connect to the water distribution system.

New Subdivision, Non-Residential Development, and Multi-Family Residential Development:

Authorization to connect the development to public water will be granted through the Cobb County Plan Review process. The Water System shall inspect and approve the connection.

Single-Family Residential:

The process for obtaining authorization to connect a single family residential property to public water is as follow:

- Acquire a street address from GIS Section of the Planning Division of the Cobb County Community Development Agency
- Acquire a letter of availability from the Water System Engineering and Records Division.
- Purchase a water meter and establish an account from the Water System Customer Service Division.
- Obtain a Single Building Permit (new construction) or plumbing permit (existing home).
- Obtain an inspection and approval of the connection from the Building Inspections Section of the Community Development Agency. An affidavit in a form provided by the Community Development Permitting Section may be submitted by a state licensed plumbing contractor to the Building Inspections Section to obtain approval in lieu of Building Inspections conducting the inspection.

103.60 WATER AND SEWER CONSTRUCTION APPROVAL

Authorization must be obtained from the Cobb County Water System to construct, alter, or modify a water or sewer line. Construction of water and sewer infrastructure will be authorized by the Water System through the Development Review Process (Section 102) and in accordance with Water and Sewer Acceptance and Record Drawings (Section 206).

103.60.01 Revisions to Approved Plans

During construction, when deviations from approved plans affecting capacity, flow, or operation are desired, the Cobb County Water System Inspector shall be notified. Revised plans shall be submitted as soon as possible to the Water System Engineering and Records Division for approval. Minor changes not affecting capacities, flows, or operation may be allowed in the field during construction by the inspector. The inspector shall have final authority as to what constitutes a minor or major change. "As-Built" plans clearly showing any changes shall be submitted to the Water System Inspector at the completion of the work and prior to sign-off of the final plat.

See list of abbreviations below with designated meanings:

LIST OF ABBREVIATIONS

The following abbreviations shall have the designated meanings:

AASHTO..... American Association of State Highway and Transportation Officials
ARC..... Atlanta Regional Commission
ANSI ..... American National Standards Institute, Inc.
BOD ..... Biochemical oxygen demand
CABO ..... Council of American Business Officials
CAC..... Community Activity Center
CCT ..... Cobb Community Transit
CCWS..... Cobb County Water System
CFR ..... Code of Federal Regulations
CO..... Certificate of Occupancy
COD ..... Chemical oxygen demand
CWA..... Clean Water Act
DUA ..... Dwelling units per acre
E & H ..... Elderly & handicapped
EPA ..... Environmental Protection Agency
EPD..... Environmental Protection Division
FEMA ..... Federal Emergency Management Agency
FHBM..... Flood Hazard Boundary Map
FIRM..... Flood Insurance Rate Map
GPM..... Gallons per minute
HOA ..... Homeowners Association
HUD ..... Department of Housing and Urban Development
HVAC ..... Heating, Ventilation, Air Conditioning
l..... Liter
LDP..... Land Disturbance Permit
mg ..... Milligrams
mg/l ..... Milligrams per liter
MRPA..... Metropolitan River Protection Act
MUTCD ..... Manual of Uniform Traffic Control Devices
NAC..... Neighborhood Activity Center
NGVD..... National Geodetic Vertical Datum
NPDES ..... National Pollutant Discharge Elimination System
NTU..... Nephelometric Turbidity Unit

O & M..... Operation and maintenance
POTW ..... Publicly owned treatment works
psi..... Pounds per square inch
RAC..... Regional Activity Center
SBCCI ..... Southern Building Code Congress International
SIC..... Standard Industrial Classification
TSS ..... Total suspended solids
USC..... United States Code

104 LICENSE REQUIREMENTS

104.01 GENERAL

104.01.01 General

The Business License Division is responsible for collecting appropriate license fees and certain tax monies from any and all businesses in the unincorporated area of Cobb County. These Business License Fees and taxes augment property taxes as a revenue source for the general operating fund of Cobb County. Developers and contractors located in unincorporated Cobb County pay a license fee based on the total gross sales in the State of Georgia. New businesses estimate their gross receipts for the balance of the calendar year. These fees are shown on Fee Schedule A of the schedule of fees. At the time a developer or a contractor seeks a building or construction permit from Cobb County, he shall have a license from Cobb County or the jurisdiction where the business is located for activity, which he is attempting to obtain a permit. Upon renewing a license, businesses in Cobb County must list all subcontractors, amounts paid, dates of work, type of work performed and addresses of contractors if they desire to reduce the occupation tax by reducing the gross receipts being reported to the business license division.

104.01.02 Applicability/Exemptions

As mandated by the Cobb County Code of Ordinances all persons, firms, or corporations, including professional corporations engaged in business in the unincorporated area of Cobb County, are required to register their business or office and obtain a license. Even though a person may be exempt under state or other law from paying a license fee, such persons must apply to the Business License Division for a free permit to engage in or carry on any business. Proper and lawful credentials exempting the applicant from paying said license fee should be submitted with application for those persons seeking exemption from fees. Generally, only churches, charitable organizations with an IRC 501(c)(3) exemption, and disabled veterans, as defined in 43-12-2 of the State Code of Georgia, may qualify for an exemption from a Business License Fee. A Business License is needed

for each location or office in unincorporated Cobb County, since each license issued authorizes the conduct of one place of business only.

104.01.03 Application/Permit Process

It is unlawful for any person to engage in any business in Cobb County without obtaining a license. Businesses located in Cobb County may apply for a Business License at the Business License Division, 191 Lawrence Street, Marietta, Georgia or one of the Government Service Centers. The East Cobb Government Service Center is located at 4400 Lower Roswell Road, Marietta, Georgia and the South Cobb Government Service Center is located at 4700 Austell Road, Marietta, Georgia. The information required on the Business License Application consists of general information about the company such as business address, mailing address, phone number, and Federal ID number, if applicable. Other information required is personal information about the principals of the business including home addresses and phone numbers, drivers' license and social security numbers, and birthdates. Utility contractors and construction industry contractors certified and/or regulated by the State of Georgia are required to submit a copy of the current state certificate authorizing an individual of the company to engage in specific construction related activities. After the completed application is received, the appropriate license fee will be assessed, payment will be accepted, and a license will be issued. It is only after this process that a building permit can be issued by the Cobb County Community Development Agency.

104.01.04 Inspections

Inspections are conducted on a random basis. Business License Inspectors travel the County on a daily basis checking for licenses at various locations. This includes building sites and business management offices. If it is determined that the appropriate license has not been purchased, the person(s) will be given an adequate length of time in which to apply. If the application is not submitted within a suitable time frame, a citation will be issued requiring the business owner or his agent to appear in court.

104.02 REQUIRED LICENSE

All persons developing, contracting, or subcontracting in Cobb County shall have a Business License from the location that the business is located regardless of permit requirements. Businesses located out of state shall obtain a Cobb County Business License or provide proof of payment of a license in another jurisdiction in the State of Georgia for construction or development related activities. Those persons who are constructing on their own property for their private use without intent to sale, lease, or develop with intent of gain shall be able to obtain a day-labor permit without obtaining a Business License. An affidavit provided by the permit office must be signed by the owner prior to obtaining a day-labor permit. However, any subcontractor of any developer, general contractor, homeowner, or day-labor permit possessor, who is conducting compensated activities, shall be required to obtain a

license in addition to the Developer's License, General Contractor's License, or other subcontractor's license.

All developers or sub-dividers of property shall obtain and maintain a valid Business License from the jurisdiction where they are located. Developers are required to register or obtain a Business Registration Certificate with Cobb County regardless of where the business is located while development activities are being conducted within developments. Also, all general contractors to include building contractors, pipeline contractors, cable-laying contractors, and paving contractors must each have a license. A license held by a general contractor or any other contractor does not cover and is not transferable to another person, contractor, or subcontractor. Licenses held by contractors do not cover developers and persons managing or overseeing developments must have their own licenses. Licenses held by management companies or agents do not absolve the license requirement for developers, contractors, or subcontractors. Developers who are also conducting general contracting, special trade contracting, or subcontracting are required to obtain a Development Contractor's License and a license for the trade(s), which is being conducted. This includes but is not limited to building construction, carpentry contractors, landscape construction, brick or block laying, concrete pouring and finishing, pipeline construction, grading construction, paving construction, insulation contractors, foundation contractors, waterproofing contractors, roofing construction, excavation, demolition, trimming contractors, siding contractors, painting contractors, carpet layers, electricians, heating and/or air conditioning contractors, plumbing contractors, low voltage contractors, burglar alarm installation, sheet metal construction, sheet rock construction, wall paper and interior finishing, interior design, tile contractors, fencing contractors, curb and gutter construction, and other related construction activities.

104.03 C0MMERICAL DEVELOPMENT CONSIDERATIONS

When commercial developments are intended to accommodate locations where alcoholic beverages will be sold by the drink on premises, locations must comply with all applicable Cobb County Codes.

105 FEE REQUIREMENTS, PENALTIES, AND APPEALS

105.01 FEE REQUIREMENTS

Copies of all fee schedules may be obtained from the applicable agencies/departments/divisions.

105.01.01 Water Connection Fees

Applications for new water meters (commercial and residential) can be made at the Cobb County Water System. Fees are available on the Water System website at www.water.cobbcountyga.gov.

Water connection fees for new service may be paid at the Water System.

All fees shall be paid before a building permit is issued.

Normal time for meter installation is approximately six to eight weeks from time of application.

A service deposit will be requested when the water meter is purchased.

105.01.02 Sewer Connection Fees

Applications for new sewerage service (commercial and residential) can be made at the Cobb County Water System.

Sewer connection fees must be obtained from the Water System. Fees for non-residential service will only be quoted in writing after pertinent information is received from the builder/developer.

All fees shall be paid before a building permit is issued.

105.01.03 Water/Sewer Service Area Assessments

There are selected areas in the County where development is assessed an additional cost for water/sewer services above the normal connection fees.

The locations of service areas, which are subjected to water/sewer assessments, can be obtained from the Water System.

105.01.04 Building Inspection Section

A fee will be charged for any construction requiring a permit (except for Trenching/Excavation Permits), for reinspections and for erosion control violations.

105.01.05 Site Plan Review Section

Fees will be charged for the recording of subdivision plats and for copies, as approved by the Cobb County Board of Commissioners.

105.01.06 Office of Environmental Health

A fee will be charged for any permit issued except for charitable organizations, personal care homes, and water impoundments.

105.01.07 Business License

A fee will be charged for any license issued, except for churches, charitable organizations, and businesses issued a business license by a government outside of unincorporated Cobb County.

105.01.08 Planning

A fee will be charged for permits as established by the Board of Commissioners.

105.01.09 Zoning

A fee will be charged for permits as established by the Board of Commissioners.

105.01.10 Fire and Emergency Services

A fee will be charged for plan review as established by the Board of Commissioners.

105.01.11 Department of Transportation

A fee will be charged for permits as established by the Board of Commissioners.

106 IMPACT FEES/DEVELOPMENT AGREEMENTS

O.C.G.A. 36-71-71 et seq. requires that counties not impose development exactions in several specific areas. Presently, other than its Water and Sewer Development fees, Cobb County does not impose Development Impact Fees. However, Cobb County does offer the use of voluntary development agreements to interested developers for donation of system improvements.

In 1991, pursuant to O.C.G.A. 36-71-1 et seq., the State of Georgia authorized local governing authorities to adopt and implement Development Impact Fees, which are intended to provide a legal mechanism for insuring that the Development Community pays its fair share to improve infrastructure. The Board of Commissioners has determined not to implement impact fees at the present time in order to stimulate economic development. Cobb County offers the use of Development Agreements in appropriate instances where a developer proposes mitigation or enhancement to the existing infrastructure. For information regarding Development Agreements, please contact a service representative in the Zoning Division.

107 SITE CONSTRUCTION DOCUMENTS

107.01 PLAN INFORMATION REQUIREMENTS

The minimum information required to be shown on all plans submitted for review and approval:

- Project name
- Developer's name, address, and phone number
- Owner's name, address, and phone number if other than developer
- Appropriate design professional's name, address, and phone number and signed seal
- Location/vicinity map
- Land lot(s) and district
- North arrow
- Scale (minimum scale 1"= 100')

- Closed property boundary showing bearings and distances of all property lines
- State on the plans the zoning, variances, and zoning stipulations as per the Board of Commissioners approval (including stipulations incorporated from Planning Commission recommendations)
- Show buffers as required by Cobb County Zoning Ordinance, State, and Federal Laws (See individual districts for buffer requirements)
- State acreage of site
- Show adjacent property information including subdivision name, lot numbers, block letters, property owners, zoning, land uses, etc.
- Indicate existing conditions, structures, pavement widths, and easements
- Appropriate design professional's seal with signature
- 24-hour emergency contact name and number in bold type (no smaller than 20 point) on cover sheet, sediment and erosion control plan, and grading plan
- Show adjoining roadways, with names, pavement widths, lengths of streets, and right-of-way widths. Also include dimension from the centerline of the existing street to the required right-of-way width
- State or show land lot lines and district on the plans. If it is not possible to show land lot lines on the plans, please provide a legal ***"tie down"*** for the property; e.g., intersection of two right-of-ways distance and bearing from property to land lot line intersection or right-of-way intersection
- Show ten (10) foot “No Access” Easement along the rear of all double frontage lots

107.02 PRELIMINARY PLAN/SITE PLAN REQUIREMENTS

The following information shall be contained in the construction drawings to demonstrate compliance with the above zoning requirements. It is recommended that as much of the site data as practical, be shown on the preliminary plat/plan in tabular form. Some of the requirements that follow may be redundant with that required in Article II of this document; however, it is repeated to provide a complete picture of information necessary for the County staff review.

- All information required under Sections 107.01 and 201.01 (unless included elsewhere on the plans)
- Show all setbacks applicable to the zoning on plans
- On the plans, state the total number of parking spaces
- On the plans, state the parking to be paved and striped consistent with Specification Section 403
- State the use of the buildings and square footage on the plans
- For residential or multi-family developments, state on the plans the total density for the project
- For residential or multi-family developments, state the house or unit size on the plans
- Show on the plans exact boundary of cemetery

- Non-residential property must have a minimum of 50 feet of public road frontage
- The location of signage (both commercial and residential) shall be shown on the plans
- Residential property must have a minimum of 75 feet of public road frontage
- Show ten (10) foot "No Access" Easement along the rear of all double frontage lots

NOTES: The following notes shall appear on the plans:

- Any proposed signs are to be permitted through the Permitting Section; i.e., subdivision entrance signs, monuments, and all commercial signs.
- Construction trailers are to be permitted through the Zoning Division of Community Development.
- Assurances of Compliance with American with Disabilities Act (ADA) are the responsibility of the owner/developer. Cobb County accepts no responsibility for said act, except for notification of this requirement.

107.03 GRADING/DRAINAGE PLAN

- All information required under Section 107.01 (unless included elsewhere in the plans).
- Topographic layout of the development must be at two-foot contour intervals based on mean sea level datum.
- Site grading plans superimposed over existing topographic survey.
- Location, size, and length of existing drainage structures. Drainage area that contributes to each existing drainage structure shall be specified or shown.
- Drainage calculations stating how drainage structures were sized. Calculations must be approved and sealed by a Professional Engineer.
- Location and design criteria of accessory drainage structures (headwalls, drainage ditches, catch basins, junction boxes, drop inlets, retention areas, and retention outlet controls).
- Drainage at intersections indicated by flow arrows on plan.
- The 100-year floodplain limits and elevations, or note absence (specify latest floodplain map and panel).
- Structural detail and dimension of the detention pond including section through detention pond, dam, or wall.
- Ingress/egress easement to stormwater detention structure and maintenance easement to include the surface area inundated by the 100-year storm event.
- Detail of outlet control structure.
- Water travel distance in street between catch basins.
- Establish easements for dedication of all stormwater drainage features directing concentrated flows across property lines.
- Flood hazard areas created or defined within the subdivision area will subject certain lots to the provisions of the Flood Damage and Prevention Ordinance.

A site plan shall be prepared to demonstrate that a structure can be built on each of these lots in accordance with the Flood Damage and Prevention Ordinance. These site plans shall be prepared prior to approval of the construction drawings. The lowest elevation point shown on these site plans shall be certified before the builder begins framing the structures on these lots. Each plat shall contain a notation clearly stating the water surface elevation of the base flood in relation to mean sea level (NGVD), as approved and accepted by the Director of the Community Development Agency or designee. Any lands below this elevation shall be designated on the plat by a heavy contour-type line, depicting the base flood level and created as a drainage easement.

- Show or indicate whether the site is in compliance with a master/parent stormwater management plan.
- Water quality BMP's as recommended in the Atlanta Regional Commission's Georgia Stormwater Management Manual, Volumes I and II. For any project that requires a land disturbance permit the project shall conform to the following standards:
  - The total impervious surface area within its development, including all public and private structures, roadways, utilities, and other facilities shall not exceed 25% of the total area within the development.
  - Impervious surfaces can be considered disconnected from the drainage system if the runoff from the impervious surface flows over a minimum of 25 feet of pervious surfaces (non-concentrated flow) or if the runoff from 1.2" of rainfall is treated by one of the following water quality best management practices as approved by the Stormwater Management Division Manager:
    - Wet Ponds (extended detention for less than 20 acres) — ED-micro pool.
    - Wetland—constructed • Dry swales • Sand Filter • Bio-retention
    - Vegetated Filtration Systems
    - Dedicated, recorded greenspace conservation areas
    - Donated (Fee Simple) floodplain land and/or stream buffers
- Any other best management practice approved by the Stormwater Management Division Manager.

General Notes

The following notes must appear on the site-grading plan:

- Additional erosion control devices to be used as required by Cobb County.
- Disturbed areas left idle for five days, and not to final grade, will be established to temporary vegetation (Ds2). Mulch, temporary vegetation or permanent vegetation shall be completed on all exposed areas within 14 days after disturbance. All areas to final grade will be established to permanent vegetation upon completion.

- When hand planting, mulch (hay or straw) should be uniformly spread over seeded area within 24 hours of seeding. If unable to accomplish, mulch shall be used as a temporary cove. Concentrated flow areas, all slopes steeper than 2.5:1 and with a height of ten feet or greater (does not apply to retaining walls), and cuts and fills within stream buffers, shall be stabilized with the appropriate erosion control matting or blankets.
- Cobb County Land Disturbance Permit must be displayed on site at all times during construction and in plain view from a County road or street.
- Erosion and sediment control devices must be installed and inspected prior to any grading on site. The contractor must call for an inspection to obtain a permit to grade.
- Sediment/erosion control devices must be checked after each storm event. Each device is to be maintained or replaced if sediment accumulation has reached one half the capacity of the device. Additional devices may be necessary as the project progresses.

107.04 STORM DRAINAGE PROFILE DRAWING

- All information required under Section 107.01 (unless included elsewhere in the plans).
- Storm drainage profiles must be prepared to a scale no smaller than 1"= 100' horizontal x 1"= 10' vertical.
- Each profile should be labeled consistent with the labeling scheme used on the drainage plan view.
- The profile should show the existing and proposed elevations along the length of the drainage system.
- Open channel design must show the grade of the flow line of the channel and include a typical ditch section that provides a non-erodible velocity at design flows. Channel slopes less than 1% may be grassed; for channel slopes greater than 1% but less than 3% the designer must demonstrate calculated velocity at or less than 5 feet per second including a channel lining for design to accommodate the design philosophy; channel slopes over 3% must be approved by the Stormwater Management Division of the Cobb County Water System.
  - Channel lining (i.e., grass, concrete, etc.) must be specified along the profile.
  - Pipe material and bedding shall be specified.
  - Crown elevations must be matched at each junction structure or the upstream crown must be higher than the downstream crown.
  - All profiles shall conform to the requirements as set forth in Section 409 of the Technical Specifications.

107.05 SOIL EROSION/SEDIMENT EROSION CONTROL PLAN & DETAILS

- The construction drawings shall contain sufficient detail in plan to demonstrate that all provisions of the Soil Erosion and Sedimentation Control Ordinance will be satisfied for the duration of construction. More specifically, the design for sediment control shall consider the stages of construction. This may require that controls be modified or placed at future increments as the construction continues. It is the duty of the developer/owner to maintain and modify the plan to ensure compliance with local and state laws. Grading limits shall be clearly noted and buffer areas clearly defined on the drawings and identified and protected on the project site.
- Natural vegetative stream buffers shall be noted on the plans and delineated by protective fencing (if contiguous to construction) during construction. Buffers shall be shown on the final plat prepared for recording along with language requiring protection by builders and homeowners. Controls to protect the buffers from disturbance during construction of dwellings on each lot shall be provided by the builders.
- All information required under Section 107.01 (unless included elsewhere in the plans).
- Identify sediment/erosion control practices as specified in the *"Manual for Erosion and Sediment Control in Georgia"*.
- Sediment and erosion control design must be to a legible scale and the details of sufficient size as to be legible in the opinion of the reviewer.
- Provide a schedule of construction activity on plan. Show starting and completion dates and sequence of events for all activities. All revised schedules shall be submitted in writing to the Plan Review Section, which must grant reasonable approval.
- An undisturbed natural vegetative buffer as required by Chapter 50 of the Cobb County Code from the top of each stream bank must be retained and shown on the plan adjacent to state waters in all areas including those within the ARC Chattahoochee River Corridor.
- Rip-rap to have sizes specified by design engineer.
- Show construction outlet location and detail on plan. Specify dimensions and maintenance requirements. Dimensions shall be large enough to fully contain the largest vehicle(s) that may enter the site. A wheel wash down facility may be needed to prevent mud tracking into the paved street. Such mud tracking is not permitted and the developer will be required to maintain the street clean and clear.
- Indicate clearing limits. These should be minimized to retain the maximum vegetative cover possible.
- Provide vegetative plan for temporary and permanent stabilization practices including species, planting dates, seeding, fertilizer, and mulching rates.

General Notes

The following notes must appear on the sediment erosion control plan:

- Additional erosion control devices to be used as required by Cobb County.
- Disturbed areas left idle for more than five days, and not to final grade, will be established to temporary vegetation (Ds2). Mulch, temporary vegetation or permanent vegetation shall be completed on all exposed areas within 14 days after disturbance All areas to final grade will be established to permanent vegetation immediately upon completion.
- When hand planting, mulch (hay or straw) should be uniformly spread over seeded area within 24 hours of seeding.
- Mulch will be used as a temporary cover. Concentrated flow areas, all slopes steeper than 2.5:1 and with a height of ten feet or greater (does not apply to retaining walls), and cuts and fills within stream buffers, shall be stabilized with the appropriate erosion control matting or blankets.
- A Cobb County Land Disturbance Permit must be displayed on-site at all times during construction and in plain view from a County road or street.
- Erosion and sediment control devices must be installed and inspected prior to any grading on site. Please call with enough lead-time for an inspection to meet your schedule.
- Sediment and erosion control devices must be checked after each storm event. Each device is to be maintained or replaced if sediment accumulation has reached one-half the capacity of the device. Additional devices must be installed if new channels have developed.

107.06 LANDSCAPE/TREE PLANTING PLAN REQUIREMENTS

All projects which require a Land Disturbance Permit must comply with the Tree Preservation and Replacement Ordinance which establishes that a minimum density of trees be preserved or planted.

Some projects are subject to additional landscape requirements defined by the Cobb County Zoning Ordinance, stipulated as a condition of rezoning, or established as a matter of policy in this document. A landscape plan for these situations must include the following:

- All information required in Section 416.06 (unless included elsewhere in the plans).
- The design shall conform to the specifications set forth in Section 416;
- A delineation and designation of any required landscaped or undisturbed buffers.
- A detail showing a typical profile and plan view of planted buffers indicating the type and spacing of all trees and shrubs.
- Every effort should be made to landscape so as to minimize all maintenance required - minimize fertilizer, plant food, and herbicide applications. Natural vegetation indigenous to the locale should be promoted; exotic vegetation should be avoided.

107.07 WATER LAYOUT PLAN

Plans submitted for review must contain the following:

- All information required under Section 107.01 (unless included elsewhere in the plans).
- Initial submittal shall include any proposed offsite water mains. Final submittal shall include copies of all off-site recorded easements.
- Site plan of the proposed development, including all future phases showing streets, street names, lot layout (if residential subdivision) or building location (if multi-family, commercial, or industrial), scale, north arrow, land lot lines, and district.
- The initial set of plans shall include a single plan sheet (sheet No. 2) which depicts the entire project layout showing preliminary construction phases.
- Locations, sizes, and materials of existing and proposed water mains, valves, meters, service lines, fire hydrants and other appurtenances on and surrounding the proposed project.
- Minimum scale shall be 1"= 20'; maximum scale shall be 1"= 100'.
- The plans must have the seal of the Georgia Registered Professional Engineer or Land Surveyor, who designed the system.
- Show existing fire hydrants on both sides of all entranceways to the property. Commercial property requires a hydrant to be located within 500 feet of the furthermost portion of structures, measured, as fire equipment would travel. Any new hydrant must meet Cobb County Water System specifications and may be required on private property behind a detector-check fire line meter.
- For non-residential subdivisions or structures, note if building is to have installed sprinklers. If domestic sprinkler is used, the installer must be approved by Fire Marshal's Office and be noted on the plans: ***"SPRINKLERED PER NFPA-13-R and/or NFPA-13"***, whichever standard is applicable.
- For non-residential subdivisions, provide a clear flat (10-foot minimum) access to all parts of the structure.
- Non-residential property may require a fire lane designation. An 8” x 11” drawing (does not have to be to scale) of the site plan must be submitted when the structural plans are submitted for architectural approval.
- Fire flow test results shown on the Water Plan.
- Commercial plans also require 24-hour record of water pressure.
- Proposed sizes, locations, and materials of water mains and service laterals. No other utilities should appear on the water plan layout sheet if such utilities tend to confuse or complicate the plans.
- Location and size of vacuum and air release valves (to be installed at highest points in the system).
- Location of thrust blocks, where needed.
- Specify method and tie-in locations with existing mains.
- Contours in feet above MSL shall be shown on Water Plan. The contour interval shall not be greater than five feet.

- Commercial projects require double backflow devices on domestic mains between the meter and the structure. Note on plans that they are installed by the developer/owner.
- Show nearest valves on the existing main that will need to be closed to make the proposed tie-in and/or the proposed live tap location.
- Show the total square footage under roof for commercial or industrial development.
- Show easements or right-of-way dedicated to the County for water lines to serve adjacent properties, also include on final plat.
- Where underground power service is provided, water system plans will not be approved by Cobb County until the water facilities layout has been reviewed by the power company and a letter so stating is furnished to the Cobb County Water System.

107.07.01 General Water Notes

The general water notes may be obtained from the Water System Engineering Division.

107.08 SANITARY SEWER PLAN

Plans submitted for review must contain the following:

- All information required under Section 107.01 (unless included elsewhere in the plans).
- Name of the Sewerage Basin(s) within which the proposed development is located (to be provided by Cobb County Water System).
- Proposed sizes, locations, and materials of sewer lines and service lines.
- Commercial plans must show building usage, square feet/seating/number of employees on plan.
- Creek crossings require full scale details at 1"= 20' minimum including piers, collars, and all other appurtenances. Rip-rap and other erosion control devices will be required for all disturbed areas. Provisions shall be required to ensure that any activity which takes place within the creek channel shall have an appropriately designed diversion of creek flows around the affected area until the disturbed stream bed/banks are stabilized.
- Minimum sewer line depth in the roadway will have 72 inches of cover.
- Maximum depth of the sewer line in the roadway is 18 vertical feet. The maximum depth of a sewer line outside of the roadway is 25 vertical feet (see Variance on 410.06).
- The maximum allowable distance between manholes is 350 linear feet (see Variance on 410.06).
- Ductile Iron Pipe is required for all outside drop manholes, last joint of pipe at all drop manholes greater than two feet, when clearances between sanitary sewer and storm drain crossings are two feet or less, or where depth of sewer line is greater than 18 feet or less than three feet of cover. Minimum depth of ductile iron pipe is two feet.

- All food service operations are required to install, operate, clean, and maintain sufficiently sized oil and grease separator (grease trap) to prevent obstruction or otherwise interfere with the proper operation of the sanitary sewer collection system and treatment plants.
- Show easements or right-of-way dedicated to the County for sewer lines to serve adjacent properties, also include on final plat.
- If the project is to be served by an on-site sewage disposal system with a proposed capacity of 10,000 gpd or less, an extra set of construction plans must be submitted separately to the Cobb County Office of Environmental Health located at 3830 South Cobb Drive, Suite 102, Smyrna, Georgia. On-site sewage disposal systems with a proposed capacity greater than 10,000 gpd must be reviewed and approved by the State Environmental Protection Division (GaEPD). A letter of non-availability from the Engineering/Records Division of the Cobb County Water System must accompany the application for review by the Health Department or the GaEPD. Other types of projects requiring the review and approval of this department are listed elsewhere in this document.
- Show all phases of the development. In the event the subdivision is developed in phases, the final construction plans for sewers may be submitted in phases or units. However, at the time the first phase is submitted, the engineer will need to submit one copy of the preliminary layout that demonstrates that the entire development can be served by sewer. The layout should also demonstrate how the sewer could serve surrounding property if extended through the subject property. This layout should show all lines required to serve any lots to be developed and any surrounding property that may be served through the property. The site plan for each phase or unit shall contain a location drawing showing the relationship of the phase or unit to the total project and to the surrounding streets and sewer outfalls.

107.09 SANITARY SEWER PLAN/PROFILE

Plan and profile sheets shall be provided for all sewers (except service laterals). Profiles should have a horizontal scale of not more than 1” = 100” and a vertical scale of not more than 1” = 10’. The plan view should normally be shown on the same sheet as the profile. Plan and profile views should have line designations, station numbers, manhole numbers, and any other indexing necessary to easily correlate the plan and profile views.

Plan and profiles shall show the following:

- Location and names of streets, sewers, and drainage easements.
- Line of existing and proposed ground surface, the grade of the sewer between each two adjacent manholes, invert of sewer in and out of each manhole, and surface elevation of each manhole. All manholes shall be

numbered on the plan and correspondingly numbered on the profile. The station number shall be shown for each manhole.

- The location and elevation of adjacent parallel streambeds and of adjacent lake surfaces shall be shown on the plan and profile.
- Sizes, locations, and inverts of all special features such as connections to existing sewers, concrete encasement, collar walls, elevated sewers, piers, special manhole covers such as vented outfall or sealed covers, etc.
- Initial submittal shall include any proposed offsite sewer and all structures within twenty feet of the center line of such proposed sewer. Final submittal shall include copies of all off-site recorded easements.
- All structures, both above and below ground, which might interfere with the proposed construction, particularly water mains, gas mains, storm drains, utility conduits, etc.
- The plans must have the seal of the Georgia Registered Professional Engineer or Land Surveyor who designed the system.

107.09.01 Special Details

Special detail drawings at a scale to clearly show the nature of the design shall be furnished to show the following particulars:

- All stream crossings and storm drain outlets with elevations of the streambed
- Details of all special sewer joints and cross sections.
- Details of special sewer appurtenances such as manholes, service connections, elevated sewers, piers, pipe bedding, special highway crossings, railroad crossings, etc.

107.09.02 General Sanitary Sewer Notes

The general sewer notes may be obtained from the Water System Engineering Division.

107.10 STREET PLAN/PROFILE SHEETS

Plan and profile sheets shall be provided for all streets.

- All traffic control devices, signs, signals, and markings (striping) to be used shall conform to the requirements of the *Manual on Uniform Traffic Control Devices for Streets and Highways* (MUTCD), latest edition.
- A Georgia Department of Transportation (GDOT) Permit may be required on State maintained routes. Provide a copy of the GDOT approved plan or a letter stating that the permit is not required.

The street plan/profile sheets shall contain at a minimum:

- All information required in Section 107.01 (unless included elsewhere in the plans).

- Provide plans and profiles for proposed streets including intersections (scale to be 1” = 50' or 100' horizontal and 1” = 10' vertical).
- Show and state percent grade of streets and length of vertical curves.
- Minimum stopping sight distance requirements must be satisfied at all vertical curves.
- Proposed vertical curves must be adequate for grades shown.
- Street intersections shall be within 2%± of finished roadway grade elevation.
- Show curve data necessary to reproduce street centerline
- Show and state design speed.
- Show in table format on plans and on the final plat the length of all proposed roads in linear feet.
- Provide typical roadway cross section and pavement specifications.
- Provide typical cul-de-sac detail which includes right-of-way and pavement radius.
- Provide sidewalks as required by the *Cobb County Sidewalk Ordinance*, latest revision. Show on plans and include detail.
- Provide handicap ramps (per Section 405) at all intersections, driveways, and curb encroachment locations. Show on plans and include detail.
- Show and state all names and right-of-way (existing and proposed) sizes from centerline and pavement widths of all roads, which appear on plans. Designate if any roadways are unpaved or private.
- Provide right-of-way miter with 10-foot legs at all intersections within subdivision. A 20-foot miter is required at major street intersections.
- Developments with roadways requiring accel/decel lanes or one additional lane widening shall require 1:20 scale construction plans for the intersection approaches.
- Dimension improvements (in feet) from street centerline to back of curb.
- Indicate tapers beyond projected property lines or end of accel/decel, as appropriate.
- Tapers are not to be curbed (transition curbing down unless tying to existing curb).
- Show all existing and proposed grades and slopes at maximum 2' contour intervals.
- Provide appropriate spot elevations.
- Clearly indicate curb type to be used and indicate transition locations. Show on plan and include detail.
- All markings to be thermoplastic.
- Depending upon the complexity and size of the development, separate roadway signing, marking, and traffic signal plans may be required.
- All traffic signal plans must be submitted to and approved by the Cobb DOT Operations Division Manager or designee.
- Proposed development must be consistent with Cobb County's Major Thoroughfare Plan and adopted Transportation Improvement Program. Plans are on file with the Engineering Division of Cobb DOT. Note source of information on plans.

- Developer may be requested to bring right-of-way up to minimum requirements as outlined through a Development Agreement in the current Cobb County Major Thoroughfare Plan. Show and state right-of-way as measured from centerline to property line.
- Minimum intersection sight distance (ISD) requirements per Section 401.07.03 must be satisfied in each direction of any proposed access, driveway, or intersection. Show lines of sight on plan view.
- Provide temporary construction exit/entrance detail and show location of access on plans. Minimum ISD requirements must also be satisfied at this location, before construction can begin.

For driveways, the following information shall be shown:

- Show proper widths of all driveways.
- State driveway radius.
- Provide spot elevations from edge of pavement along centerline of proposed drive(s).
- Provide driveway/intersection profiles.
- On one-way drives, show one-way arrows and provide details.
- Show all streets and non-single family driveways near the proposed access on both sides of the road.

107.10.01 Intersection Sight Distance Plan

When an intersection meets or barely exceeds the minimum intersection sight distance, intersection sight distance information is required and shall include the following:

A plan view of the entrance(s) must be prepared at a scale of 1” = 20’ and include all details of road widening, accel/decel lanes, striping, drainage, etc. The plan shall clearly show how the existing drainage can be conveyed through the intersection without draining the runoff through the intersection on the surface. The plan shall clearly show how the water will be directed into the receiving channel downstream. Calculations must be provided to support the design depicted in the plan view.

Plan shall clearly show existing width of pavement, right-of-way on both sides of roadway, and define centerline from which improvements will be referred. Roadway cross-slope and super elevation with appropriate design calculations shall be shown on the plat.

Notes regarding street lighting requirements for new subdivisions and developments should be shown on the drawings in accordance with the Cobb County Street Lighting Ordinance, Section 3-23-41.

107.10.02 General Street Notes

The following notes shall be on the street plan/profile drawings. Additional notes will be required to address specific aspects of the individual development, such as street lighting.

- Construction equipment shall not be parked in required right-of-way and must be stored within the site.
- If medians/islands are to be planted, minimum intersection site distance requirements must be satisfied and will be maintained by the homeowners' association or the developer. These landscape plans must have verification of a minimum site distance.
- Contractor shall restore roadway shoulders to minimum Cobb County specifications.
- Roadway and driveway crossings shall be bored and cased.

107.11 CONSTRUCTION DETAILS

A construction details study shall contain, at a minimum, the following information:

- Water/sewer station
- DOT typical standard
- Show 10 foot "No Access Easement" along the rear of all double frontage lots along a classified roadway
- Show the location of all existing and proposed utilities and easements (aerial and underground). All power poles shall be relocated to within two feet of the required right-of-way. The relocation of the existing pole shall be clearly identified by a proposed pole location on the plan
- Provide easement agreements for the following:
  - Work in power company easement
  - Work in gas company easement
  - Off-site work
  - Common use of driveways (cross access)
- Provide interparcel access easements
- Provide the following general notes:
  - The contractor shall maintain driveway access and postal service throughout the duration of the project.
  - The contractor shall restore the roadway shoulders to minimum Cobb County specifications.
  - All roadway and driveway crossings shall be bored and cased.
- If permission is obtained to open-cut the street for utility installation, the typical street cut repair detail per Cobb County Standards and Specifications must be provided on the construction plans
- Construction details for storm drainage systems and appurtenant works shall comply with the latest standards approved and promulgated by the Georgia Department of Transportation in *Standard Specifications (for) Construction of Roads and Bridges*, latest edition

- Construction details for dams and appurtenant works shall comply with those promulgated by the U.S. Department of Interior, Bureau of Reclamation in *Design of Small Dams*, latest edition or other accepted design criteria
- Where a conflict or difference is identified between the above references and specifics within these standards for Cobb County, these standards for Cobb County shall take precedence over all others.
- Where alternate technology, research, etc., provides a potentially workable solution not addressed herein or as a replacement for the standard herein, the project specific design professional may present a case for the alternate to the Cobb County Water System Director, who on the basis of the proven alternate well documented, may grant approval for the use of same.

107.12 HYDROLOGY REPORT

The site hydrology study shall contain, but not be limited to, the following information and data:

- The hydrology study must be prepared by a Professional Engineer. The seal and signature of the design professional must be located on the cover sheet of the study.
- Narrative explaining the rationale and method used in design.
- Drainage Area Map showing all drainage basins and sub-basins. Drainage basins shall be clearly labeled and correlate to basin identifiers used in the study.
- The Drainage Area Map shall show the direction of flow and acreage of drainage area for stormwater entering and exiting the site
- A summary shall be provided to show pre-development, post-development flows for the 2-, 5-, 10-, 25-, 50-, and 100-year storm events.
- Allowable discharge from the site shall consider downstream conditions. Explain impact on lower adjacent properties. Describe the condition of the downstream receiving the concentrated discharge from the site; Assess the impact to a point where the developed property is 10% of the total drainage area or the next downstream construction whichever is smaller.
- On-site and off-site drainage areas shall be clearly defined in the study and be consistent with the Drainage Area Map.
  - Drainage areas that bypass detention in a developed state demonstrate how these flows are managed to a pre-development rate. Developed runoff must not increase at points where the flow is to exit along the subdivision boundary.
- Maximum pre-development NRCS Curve (CN) used to determine the peak runoff by the NRCS (i.e. Soil Conservation Service) rainfall runoff Curve Number-mythology shall be 55. The rational method can no longer be used for storage routing analyses unless specifically approved in writing by the Division Manager of the Stormwater Management Division and in any case cannot be used for drainage areas that exceed 5 acres.

- Minimum time of concentration of 10 minutes shall be used. A five-minute concentration time may be used for subdivisions/developments of less than one acre.
- Stormwater must be managed to pre-development rates.
- Demonstrate how the discharge velocities from the stormwater management structure are dissipated to non-erodible velocities before the runoff exits the subdivision boundary. The outlet from the detention structure must be located a minimum distance from the project boundary to provide adequate dissipation of energy. Under no circumstances shall the outlet be any closer than ten feet to the subdivision boundary.

107.13 SITE PLAN TO SATISFY REQUIREMENT OF FLOOD PREVENTION ORDINANCE

The following information shall be shown on the required site plan:

- Land lot, district, subdivision name, and street address
- Drawing scale not less than 1" = 100'
- House location indicating the lowest footing elevation
- Location of streams, lakes, buffers, etc.
- Any drainage structures (i.e., pipes, headwalls, etc.)
- The plan should show existing and proposed contours to indicate that the proposed construction will not result in excess fill material being placed below the 100-year flood elevation
- The 100-year flood contour
- Any plan for a building site outside of a developed subdivision, or deviation from the subdivision design, must be prepared by a licensed surveyor, landscape architect, or civil engineer
- If the site preparation is consistent with the subdivision design, no professional seal will be required on the site plan. Inaccurate sketches that are not to scale will not be acceptable.

108 STRUCTURAL PLAN REVIEW DOCUMENTS

108.01 BUILDING, FIRE, & LIFE SAFETY CODES

Cobb County has adopted the following building, fire, and life safety codes which must be adhered to in conjunction with any structural plan submitted:

- 2006 International Building Code
- 2006 International Mechanical Code
- 2006 International Fuel Gas Code
- 2006 International Plumbing Code
- 2005 National Electrical Code
- 2006 International Residential Code
- 1990 Cobb County Code Chapter 18

- 1997 Georgia State Handicap Code - ANSI A117.1 (1991 edition effective 1-1-94)
- 2006 International Energy Conservation Code
- 2000 Life Safety Codes and Modifications
- 2006 International Fire Code
- 1994 O.C.G.A. for Existing Buildings 8-3-1 et seq.

All of said codes are hereby adopted including any and all future versions and amendments as may be made from time to time by the Board of Commissioners of Cobb County and/or the Department of Community Affairs.

108.01.01 Building Code Inspections

The Cobb County Building Code requires the following inspections at the time of this publication. Inspections may be added or deleted without notice. Please request most current inspection requirements, from permitting staff, at time of permitting.

- Footings and/or foundations (also on commercial slabs): Must be passed before pouring concrete.
- Sewer: Must be passed before sewer to building connection is covered.
- Under Slab Rough (Applicable only when electrical, plumbing, heating, or air conditioning items are placed under or inside poured concrete): Must be passed before pouring concrete.
- Electrical Rough: Must be passed before any insulation or sheetrock can be installed over plumbing items.
- Plumbing Rough: Must be passed before any floor insulation or sheetrock can be installed over plumbing items.
- Heating, Ventilation, and Air Conditioning Rough: Must be passed before ducts can be covered with wall insulation and/or sheetrock.
- Prefab Fireplace Rough: Must be passed before closing front opening around fireplace items.
- Residential Insulation: After all rough inspections, including framing inspection have passed inspection and after all insulation has been installed.
- Framing: Must not have insulation in walls and inspection must be passed before sheetrock can be installed.
- Electrical Final: Must be passed before electricity can be turned on.
- Heating, Ventilation, and Air Conditioning Final: Must be passed before gas can be turned on.
- Plumbing Final: Must be passed before Final Building Inspection.
- Building Final: Must be passed before the Certificate of Occupancy is issued.
- All freestanding buildings, condominiums, and apartments must receive approvals, inspections, and releases from all and any other affected agencies/departments/divisions before a Certificate of Occupancy can be issued by the Inspection Division.

The Fire Marshal's office shall make a final inspection and release before a Certificate of Occupancy is issued on apartments.

Any work done in advance of the above inspections, which inhibits inspections from being conducted, WILL BE ORDERED REMOVED! No letters, indemnity agreements, or other substitutes will be accepted if a building is occupied before the Building Inspections Division has completed final inspections and issued a Certificate of Occupancy. The occupants may be required to vacate the premises until the Certificate of Occupancy can be issued.

108.02 PLAN INFORMATION REQUIREMENTS

The minimum information required to be shown on building plans submitted for review and approval:

- Project name
- Builder's name, address, and phone number
- Owner's name, address, and phone number
- Appropriate design professional's name, address, and phone number
- Location/vicinity map
- Land Lot(s) and District
- Scale (minimum scale 1" = 100')
- Any zoning/variance stipulations or conditions relating to architectural controls
- Appropriate design professional's seal
- 24-hour emergency contact name and number in bold type (no smaller than 20 point type)
- The following notes shall appear in **red**:

  This project may be subject to the architectural standards of the Americans with Disabilities Act of 1990 (The ADA), and as amended from time to time. Issuance of a building permit does not certify compliance with the Federal law. Copies of the guidelines and information concerning the ADA may be obtained through the Architectural and Transportation Barriers Compliance Board, (202) 653-7834 (Voice/TDD) or (800) USA-ABLE. Failure to comply with the ADA may result in federal fines and penalties.

108.03 SINGLE FAMILY/RESIDENTIAL PERMITTING REQUIREMENTS

- All information required under Section 108.02 (unless included elsewhere in the plans).
- Completed application filed with the Permitting Section of Development and Inspections Division.
- Proof by contractor of business license as may be required by local and state laws. In the event an individual is constructing his/her own home, no business license shall be required.

- Cobb County Code Compliance Bond in the amount of $10,000 (NOTE: Business License and Bond must read exactly the same.)
- Proof of payment for water and sewer or on-site sewer management system fees.
- Approval from:
  - Development & Inspections Division
  - Planning Division
  - Zoning Division
  - Business License Division
  - Water System
  - Office of Environmental Health
  - Department of Transportation
- Approved site plan showing setbacks and any sanitary or drainage easements and setbacks.

108.04 RESIDENTIAL ACCESSORY STRUCTURE PERMITTING REQUIREMENTS

- All information required under Section 108.02 (unless included elsewhere in the plans).
- Completed application filed with the Permitting Section of Development and Inspections Division.
- Proof by contractor of business license as may be required by local and state laws. In the event an individual is constructing his/her own home, no business license shall be required.
- Cobb County Code Compliance Bond. See Sample Bond. (NOTE: 1. Homeowners will be allowed to permit up to $ 10,000 per year without bond requirements. 2. Business License and bond must read exactly the same.)
- Approvals from:
  - Development & Inspections Division
  - Planning Division
  - Zoning Division
  - Business License Division
  - Water System
  - Office of Environmental Health
  - Department of Transportation

Approved site plan showing setbacks and any sanitary or drainage easements and setbacks.

108.05 APARTMENT AND CONDOMINIUMS PERMITTING REQUIREMENTS

- All information required under Section 108.02 (unless included elsewhere in the plans).

- Completed application filed with Structural Plan Review Section.
- Approved site plan as set forth in Section 102.
- Street address from the Site Plan Review Section.
- A minimum of four sets of complete plans as required under Section 102.04, which include structural, architectural, plumbing, electrical, and HVAC drawings. See State of Georgia Disabilities Act.
- Approval by Fire Marshal for apartments.
- Proof of a business license by contractor, as required by local and state law.
- Cobb County Code Compliance Bond in the amount of $10,000. (NOTE: The Business License and the bond must read exactly the same.)
- Proof of payment for water and sewer fees.
- Approvals from:
  - Development & Inspections Division
  - Planning Division
  - Zoning Division
  - Business License Division
  - Water System
  - Office of Environmental Health
  - Department of Transportation

Grading Permit (**NOTE: NOT TO BE CONFUSED WITH LAND DISTURBANCE PERMIT)**. All erosion control measures and other requirements of the approved site plan must be installed, constructed, and inspected by the Site Inspections Section.

For permit approval purposes, apartments and condominiums shall be reviewed under the currently adopted Standard Building Code.

The amount of time required for Structural Plan Review varies with complexity of plans. A minimum of five working days is usually required. Plans are reviewed by appointment only. Walk-ins will be given appointments as time permits.

108.06 FEE SIMPLE TOWNHOUSE PERMITTING REQUIREMENTS

- All information required under Section 108.02 (unless included elsewhere in the plans).
- Completed application filed with the Structural Plan Review Section.
- Complete site plan as set forth in Section 102.
- Street addresses will be shown on final plat.
- A minimum of four sets of complete plans as required under Section 102.04, which include structural, architectural, plumbing, electrical, and HVAC drawings. See State of Georgia Disabilities Act.
- Proof of a business license by contractor, as required by local and state law.
- Cobb County Code Compliance Bond in the amount of $10,000. (NOTE: The Business License and Bond must read exactly the same.)
- Proof of payment for water and sewer fees.

- Approvals from:
  - Development & Inspections Division
  - Planning Division
  - Zoning Division
  - Business License Division
  - Water System
  - Office of Environmental Health
  - Department of Transportation
  - Fire Marshal

Grading Permit **(NOTE: NOT TO BE CONFUSED WITH LAND DISTURBANCE PERMIT.)** All erosion control measures and other requirements of the approved site plan must be installed, constructed, and inspected by Site Inspections Section.

For permit approval purposes, Fee Simple Townhouses shall be under the currently adopted Standard Building Code.

The amount of time required for Structural Plan Review varies with complexity of plans. A minimum of five working days is usually required. Plans are reviewed by appointment only. Walk-ins will be given appointments as time permits.

108.07 TENANT SPACE PERMITTING REQUIREMENTS

- All information required under Section 108.02 (unless included elsewhere in the plans).
- Completed application filed with Structural Plan Review Section.
- Street address from the Site Plan Review Section.
- One set of proposed floor plans, as well as floor exiting plans.
- Approval by Fire Marshal, Zoning Division, Structural Plan Review Section (for all occupancies), and Water System for hair salons and coin operated laundries required.
- Approval by Health Department, State Agricultural Department, and Water System for any food service.
- Proof of payment of water and sewer fees. Please note with certain large water consumption users (beauty shop, food service, or laundry), additional sewer fees may be required.
- Proof of a business license by contractor.
- Cobb County Code Compliance Bond in the amount of $10,000. See Sample Bond. (NOTE: The Business License and the bond must read exactly the same.)
- Completed subcontractors' information form filed with the Business License Division.

Plan review time varies with complexity of plans. Plans are reviewed by appointment only. Walk-ins will be given appointments as time permits.

108.08 ALTERATION PERMITTING PROCESS

- All information required under section 108.02 (unless included elsewhere in the plans).
- Completed application filed with Structural Plan Review Section.
- Complete site plan under Section 102, signed by the Plan Review Committee when doing exterior renovations.
- Street address from the Site Plan Review Section.
- A minimum of four sets of complete plans. Plans are to show scope of work in regards to structural, architectural, plumbing, electrical, and HVAC drawings.
- When construction cost exceeds 40% of valuation or a change in occupancy occurs, the entire structure must be upgraded to current codes.
- Approval by Health Department, State Agricultural Department, Fire Marshal, and Water System for any food service.
- Approval by Fire Marshal.
- Proof of a business license by contractor.
- Completed subcontractor information form filed with the Business License Division.

Plan review varies with complexity of plans. Plans are reviewed by appointment only. Walk-ins will be given appointments as time permits.

108.09 FREE STANDING BUILDING AND ADDITION PERMITTING PROCESS

- All information required under Section 108.02 (unless included elsewhere in the plans).
- Completed application filed with Structural Plan Review Section.
- Complete site plan under Section 102 signed by the Plan Review Committee.
- Street Address from the Site Plan Review Section.
- A minimum of four sets of complete plans, which include: structural, architectural, plumbing, electrical, and HVAC drawings. See Disabled Persons Requirements, Section 405.
- Approval by Health Department, Water System, and State Agricultural Department for food services.
- Approval by Fire Marshal.
- Proof of Cobb County Business License by contractor.
- Cobb County Code Compliance Bond in the amount of $10,000. See Sample Bond. (NOTE: Business License and the bond must read exactly the same.)
- Proof of payment for Water and Sewer or On-Site Sewage Management System Fees.
- For sprinkler systems meeting the requirements of NFPA, some exceptions to the Building Code may be allowed.
- Grading Permit **(NOTE: NOT TO BE CONFUSED WITH LAND DISTURBANCE PERMIT.**) All erosion control measures and other

requirements of the approved site plan must be installed, constructed, and inspected by the Development and Inspections Division and/or other stipulated agencies/departments/divisions/sections prior to issuance of building permit.

- A list of all subcontractors must be furnished to the Building Inspections Section.

Plan review time varies with complexity of plans. A minimum of five working days is usually required. Plans are reviewed by appointment only. Walk-ins will be given appointments as time permits.

108.10 FAST TRACK PERMITTING PROCESS

- All information required under Section 108.02 (unless included elsewhere in the plans).
- Completed application filed with Structural Plan Review Section.
- Complete site plan under Section 102 signed by Plan Review Committee.
- Street address from the Site Plan Review Section.
- A letter of vested interest from the property owner on County approved form.
- One complete set of structural drawings sealed by the architect, if required by code, and a preliminary set of architectural drawings.
- Proof of Cobb County Business License by contractor.
- Cobb County Code Compliance Bond in the amount of $10,000. See Sample Bond. (NOTE: The business license and bond must read exactly the same.)
- Proof of payment for Water and Sewer or On-Site Sewage Management System Fees.
- Grading Permit **(NOTE: NOT TO BE CONFUSED WITH LAND DISTURBANCE PERMIT.)** All erosion control measures and other requirements of the approved site plan must be installed, constructed, and inspected by the Development and Inspections Division and/or other stipulated agencies/departments/divisions/sections prior to issuance of building permit.
- A list of all subcontractors must be furnished to the Building Inspections Section.
- Payment of building permit in full.

NOTE: All architectural and/or engineering plans must be presented for review prior to proceeding with construction past footing, foundations, and/or slabs.

108.11 FIRE DAMAGE REPAIR PERMITTING PROCESS

- All information required under Section 108.02 (unless included elsewhere in the plans).
- Completed application filed with Structural Plan Review.
- Street address from the Site Plan Review Section.

- Approval from Zoning Division and Fire Marshal (except for detached single family).
- Proof of Cobb County Business License by contractor.
- Cobb County Code Compliance Bond in the amount of $10,000. See Sample Bond. (NOTE: The business license and bond must read exactly the same.)
- All plumbing and electrical systems within the structure shall be checked, repaired, or replaced as necessary under current codes.
- Any charred wood must be replaced.
- Any damaged structural members may require an engineer's report and/or replacement.
- All smoke-damaged components shall be properly treated.
- If the cost of repairs exceeds 50% of the value of the building, the building must be upgraded to current codes.
- All HVAC systems within the structure shall be checked, resealed, or replaced if necessary.
- A list of all subcontractors must be furnished to the Building Inspections Section.

NOTE: ALL PERMITS ARE ISSUED SUBJECT TO FIELD INSPECTION.

Any code violations found by the building inspector must be repaired before the building can be occupied.

108.12 SATELLITE DISH PERMITTING PROCESS

- All information required under Section 108.02 (unless included elsewhere in the plans).
- Completed application filed with Structural Plan Review Section.
- Street address from the Site Plan Review Section (unless already existing).
- Approval from the Zoning Division.
- Two sets of approved site plans.
- Dish attached to building must have footing detail, if applicable.
- Ground mounted dish must have footing detail.
- Proof of Cobb County Business License by contractor.
- Cobb County Code Compliance Bond in the amount of $10,000. See Sample Bond. (NOTE: The business license and the bond must read exactly the same.)
- A list of all subcontractors must be furnished to the Building Inspections Section.

Plan review time varies with complexity of plans. Plans are reviewed by appointment only. Walk-ins will be given appointments as time permits.

108.13 FREE STANDING SIGN PERMITTING PROCESS

- All information required under Section 108.02 (unless included elsewhere in the plans).
- Completed application filed with the Permitting Section.
- Street address from the Site Plan Review Section.
- Two sets of approved site plans.
- Two sets of footing details.
- Any sign over 35 feet in height must have plans SEALED by a Georgia Registered Engineer.
- Proof of Cobb County Business License by contractor.
- Cobb County Code Compliance Bond in the amount of $10,000. See Sample Bond. (NOTE: The Business License and bond must read exactly the same.)
- A list of subcontractors must be furnished to the Building Inspections Section.

Plan review time varies with complexity of plans. Plans are reviewed by appointment only. Walk-ins will be given appointments as time permits.

108.14 TEMPORARY TENT PERMITTING REQUIREMENTS

- All information required under Section 108.02 (unless included elsewhere in the plans).
- Completed application filed with and approved by the Zoning Division and Fire Marshal.
- Street address from the Site Plan Review Section.
- Proof of flame retardant compliance.
- Proof of liability insurance in the amount of $100,000.
- Notarized letter from property owner/agent where tent is to be installed.
- Proof of Cobb County Business License.
- Tent permits are limited to 14-day maximum use. Extensions require approval from the Zoning Division and the Development and Inspections Division.
- A list of subcontractors must be furnished to the Building Inspection Section.

108.15 DEMOLITION PERMITTING REQUIREMENTS

- All information required under Section 108.02 (unless included elsewhere in the plans).
- Completed application filed with Structural Plan Review.
- Historic Preservation Planner to approve this permit for **any** building, not just historic.
- Street address from the Site Plan Review Section.

- Proof of Cobb County Business License by contractor.
- Cobb County Code Compliance Bond in the amount of $10,000. See Sample Bond. (NOTE: The business license and the bond must read exactly the same.)
- Property owners will be allowed a day labor permit without Business License and Code Compliance Bond, with proof of ownership and property is not covered under County, State, or Federal Historic Designation.
- Notarized letter from property owner giving permission for demolition.
- A list of subcontractors must be furnished to the Building Inspections Section.
-

108.16 SWIMMING POOL REQUIREMENTS

- All information required under Section 108.02 (unless included elsewhere in the plans).
- Completed application filed with Structural Plan Review Section.
- Street address.
- Proof of Cobb County Business License by contractor.
- Cobb County Code Compliance Bond in the amount of $10,000. (NOTE: The business license and bond must read exactly the same.)
- Approved site plan by Planning Division and Zoning Division.
- Approved site plan by Community Development Agency and Cobb County Water System, if permanent easements show on plat.
- Subcontractor information.
- All swimming pools, with a depth of more than 24 inches, shall comply with the 1994 Standard Swimming Pool Code.
- Swimming pool backwash may connect to sewer system. In the event it is determined that swimming pool backwash cannot be discharged without damage to the environment, the swimming pool backwash may be connected to the wastewater collection system under the following circumstances:
  - There must be a minimum of a 3-inch atmospheric break between the sewer service and the backwash discharge line.
  - The sewer service line accepting the discharge must be one standard pipe size larger than the backwash discharge line or a minimum of 4 inches, whichever is greater.
  - The discharge connection to the wastewater collection system must be located in the housed backwash facility and protected from any surface drainage or runoff in accordance with Cobb Code Section 3-26-48.
  - Swimming pools connected to the wastewater collection system must be paying monthly sewer rates to Cobb County Water System and will not be eligible for the annual sewer credit offered for swimming pool filling. This shall not apply to the initial filling of the swimming pool.
  - All proposals for the backwash connection to the wastewater collection system must be shown on the site plans submitted for Site Plan Review

and on the construction drawings submitted to Structural Plan Review for permit issuance.
- Approved plat or site plan by the Office of Environmental Health, as required.

Office of Environmental Health Requirements:
Except for pools serving two or less private residences, it shall be unlawful for any person to operate a swimming pool in Cobb County, Georgia, without having applied for and obtained a valid permit issued by the Health Department. All pools proposed to be constructed on premises utilizing individual on-site sewage management systems must be approved by the Health Department prior to construction.

Construction Approval
Upon request, the Health Department shall provide application forms for approval to construct, alter, or reconstruct a swimming pool. All applications shall be submitted in duplicate together with a complete set of detailed plans and specifications. Except for pools serving a private residence, all plans must be submitted to the Health Department at least ten days prior to the anticipated date for beginning construction. Allow five working days for completion of the plan review.

- Plans and Specifications: All drawings, specifications, and data shall be prepared by a design professional and shall bear the registration stamp and number of said person, except plans for a private, residential pool serving two or more single family residences. Three sets of plans and specifications shall be drawn to scale and shall be accompanied by complete specifications to permit a complete review of the plans, and shall include:
  - a plan and sectional review with all the necessary dimensions of both the pool and surrounding area
  - complete site drainage details including diversion ditches for surface run-off
  - a piping diagram showing the appurtenances, including treatment facilities in sufficient detail
  - specifications shall contain details of all treatment equipment, including performance characteristics of pumps, chlorinators, chemical feeders, filters, strainers, interceptors, and related equipment
  - all swimming pools, including adjacent wading pools, shall be provided with a recirculation and filtration system

Any additional data required by the Health Department for the purpose of clarification, anticipated use, or to support any changes in design or scope of the project must be submitted prior to issuance of a permit to construct. Maximum bathing load must be stated on the plans.

A permit to construct, alter, or modify a pool shall be issued only after a review of the plans and specifications indicates compliance with these regulations.

Payment of the plan review fee shall be remitted with the application to construct and all relevant plan review fees must be paid prior to issuance of a permit to construct.

The owner or agent for the owner may request a preliminary review of the plans by the Health Department without obtaining a permit to construct the pool. A fee may be charged for this consultation service.

All contractors shall have a current business license. The general contractor and subcontractors performing electrical, heating, and plumbing work shall have a current license by the appropriate governmental jurisdiction. All work must be inspected and approved by the Development and Inspections Division prior to final approval by the Health Department.

All piping shall be water-pressure tested to a minimum of 50 psi for a minimum of 30 minutes. The results of these tests shall be submitted to the Health Department.

If construction is not commenced within one year from the date of approval, the construction permit becomes invalid and the project must be resubmitted to the Health Department.

Operation Approval

Application for permit to operate a pool shall be made on forms provided by the Health Department. The application shall be prepared in duplicate. The original shall be forwarded to the Health Department and a carbon copy retained by the applicant. Application shall be made at least ten days prior to the anticipated date of opening.

Operational permits shall expire annually on the date indicated on the permit. Only persons who comply with all provisions of this regulation shall be entitled to receive and retain a permit.

A permit fee shall be remitted with the application to operate and all pertinent fees must be paid in full prior to issuance of an operational permit.

Inspection by the Office of Environmental Health

Periodically, the Health Department shall inspect every operating pool located in Cobb County, Georgia.

Administration and Enforcement by the Office of Environmental Health

Variance

These regulations shall be administered by the Health Department, who has the authority to grant a variance from the requirements of these regulations as follows:

- Where it is demonstrated to the satisfaction of the Health Department that strict compliance with the standards would result in practical difficulty to or undue hardship upon the property owner due to special conditions or causes
- Where the public or private interest in the granting of the variance is found by the Health Department to clearly outweigh the interest of the application of uniform rules
- Where such alternative measures are provided which in the opinion of the Health Department will provide adequate public health and safety protection

In granting a variance, the Health Department may attach thereto any conditions, which may be deemed advisable so that the purpose of these regulations will be served, public health, safety, and welfare secured.

An operational permit may be temporarily suspended by the Health Department upon the violation by the holder of any of the terms of this regulation or revoked after an opportunity for a hearing by the Health Officer upon severer or repeated violations. The Health Department may post signs prohibiting use of the pool at any pool deemed to be unsanitary or unsafe. Signs shall be removed by the Health Department only. No person may enter the pool enclosure.

The administration and enforcement of these rules and regulations shall be as prescribed in the Official Code of Georgia, Annotated Chapter 31-5.

108.17 STRUCTURAL RETAINING WALLS PERMIT REQUIREMENTS

When permanent grades are proposed with a resulting slope steeper than one-foot vertical for every two feet of horizontal displacement (2:1), an appropriate retaining structure shall be designed to reinforce or retain the resulting embankment. The structure shall be designed by a registered professional engineer to be constructed of reinforced concrete as defined and specified by standards of the reinforced concrete. Initiate latest revision OSHA, or as may be amended from time to time. An engineered design may be substituted for the reinforced concrete design if the specific vendor has a pre-qualified acceptance from the Manager of Development and Inspections. All structural components of the wall shall meet the minimum building codes for the proposed use.

When the necessity for an earth retaining structure is required for a vertical displacement of 30 inches or less, appropriate landscaping timbers or approved equal, may be employed if no permanent structure is supported by the soil retained by the retaining wall. The use of railroad cross ties or other timber product will only be allowed in these instances. Landscape timbers or other approved timber products (except for railroad cross ties) will be allowed for walls higher than 30

inches that do not support a permanent structure. Walls higher than 30 inches must be designed and inspected by a professional engineer licensed to practice in the State of Georgia.

All wall designs must demonstrate complete dimensions for line and grade. Wall design will consider foundation drainage and select backfill material for the proposed conditions.

Walls shall be located in such a fashion as to not encroach upon existing or proposed drainage easements or drainage courses or floodplains to encumber the natural flow of surface runoff of stormwater. Walls shall be located at a distance from such watercourses to allow for anticipated future maintenance of the easement to prevent a safety hazard to the maintenance workers or to jeopardize the structural integrity of the wall.

Walls that are not attached to the permitted structure and require a foundation shall be permitted as a freestanding structure and shall be inspected as prescribed by the permitting procedure. Walls will be inspected for conformance with the approved design. Any deviation from the approved design will require the engineer of record to submit a certification of the non-conforming structure along with supporting calculations to indicate that the construction is consistent with the initial design parameters. In the event the inspector has not been provided ample opportunity to inspect the structure, the contractor must provide a certification of the construction by the engineer of record and geotechnical reports for concrete testing for strength, reinforcing steel specifications. Failure to comply with the requirements of this section will require that the remaining work cease and/or removal of nonconformance until the adequacy of structural integrity be demonstrated to the satisfaction of the Manager of Development and Inspections.

Retaining walls that are proposed for the purpose of stormwater detention must be designed to demonstrate that the walls are capable of a hydrostatic load as measured from the top of the foundation footing to the highest elevation along the top of the wall. The hydrological design must allow for a free board dimension of one foot and an emergency overflow capacity equal to the allowable peak discharge for the 100-year storm event. The routing calculations should not take into account the existence of the emergency overflow. Place the overflow device above the projected 100-year flood elevation within the detention area. The structure shall also be required to meet the requirements of Sections 409 and 413.

108.18 FOOD SERVICE REQUIREMENTS

These rules and regulations shall have application to any food service establishment which means establishments for the preparation and serving of meals, lunches, short orders, sandwiches, frozen desserts, or other edible products. The term "food service establishment" shall not mean a "food sales establishment" as defined in

Code Section 26.2-21, O.C.G.A., which does not provide seating or facilities for consumption of food on the premises.

Application/Permit Process

Food Processing Establishments are regulated by the:

Georgia Department of Agriculture
19 Martin Luther King, Jr. Drive
Atlanta, Georgia 30334
Telephone: (404) 656-3627

All food related activities including plan review, permitting, and inspections are the responsibility of the Georgia Department of Agriculture.

Food Sales Establishments are regulated by the:

Georgia Department of Agriculture
19 Martin Luther King, Jr. Drive
Atlanta, Georgia 30334
Telephone: (404) 656-3630

All food related activities including plan review, permitting, and inspections are the responsibility of the Georgia Department of Agriculture. However, food sales establishments providing seating for the consumption of food on the premises are required to be approved, permitted and inspected by the Cobb County Board of Health. See below section for the requirements.

- Food Service Establishments are regulated by the Cobb County Board of Health.
- Plans and specifications must be submitted for review and approval when a food service establishment is constructed or extensively remodeled, or when an existing structure is converted to use as a food service establishment.
- Five sets of plans and specifications must be submitted to the Health Department at least 14 days prior to beginning construction. The plans should be drawn to a minimum scale of ¼" = 1' and should include the proposed layout, construction materials, mechanical plans, and the type and model of proposed fixed equipment and facilities.
- A plan review fee is due when the plans are submitted. Allow three working days for completion of the plan review.
- The plans must be approved by the Health Department and Fire Marshal prior to the beginning of construction.
- The management of new food service establishments or existing food service establishments which change ownership, location, or plan to open must submit a permit application at least ten days prior to the anticipated date of opening, change in ownership, or change in location.

- A pre-opening inspection must be completed by the Health Department prior to the opening of new establishments and before changes in ownership of existing establishments to determine if the facility is in compliance with current regulations.
- After completion of an inspection by the Health Department, which reveals compliance, the establishment is approved to open provided that applicable fees are paid and applications are completed. The food service permit will be forwarded by mail to the management.

Inspections

Frequency of Inspections

In the case of "food service establishments," an inspection of a food service establishment shall be performed by the Health Department as often as necessary for the enforcement of State and Local Food Service Regulations. In addition, inspections shall be performed by the Cobb County Water System to ensure compliance with their requirements and applicable County code, including grease trap requirements and payment of fees.

Access

Representatives of the Health Department, after proper identification, shall be permitted to enter any food service establishment or operation at any reasonable time for the purpose of making inspections to determine compliance with this section. Should access be denied, an inspection warrant may be obtained as authorized in O.C.G.A., Chapter 31-5, Article 2.

Report of Inspection

When the Health Department makes an inspection of a food service establishment or operation, the findings shall be recorded on an inspection report form provided for this purpose. Upon the completion of the inspection, the evaluating official shall have management or its representative sign the inspection report form. Management's signature shall not necessarily indicate agreement with the findings noted on the inspection form. The most current inspection report shall be posted in public view.

Administration and Enforcement

Issuance

Permits shall be issued by the Health Department. Such permits shall be valid until suspended or revoked.

Suspension or Revocation

The Health Department shall have the power and authority to suspend or revoke permits for failure to comply with the provisions of this section. When an application for a permit is denied or the permit previously granted is to be suspended or

revoked, the applicant or holder thereof shall be afforded notice and hearing as provided in O.C.G.A., Section 31-5, Article 1. If an application is denied or a permit suspended, or revoked, the applicant or holder of the permit must be notified in writing, specifically stating any and all reasons why the action was taken.

Notice of Hearing

For the purpose of this section, a notice of hearing is properly served when delivered in person or by registered or certified mail.

108.19 PERSONAL CARE HOMES

These rules and regulations shall have application to a building or group of buildings, a facility, or place in which is provided two or more beds and other facilities and services, including room, meals, and personal care for non-family ambulatory adults for which a fee for room and board is charged. However, these rules and regulations do not apply to facilities owned or operated by the federal government.

Application/Permit Process

General Requirements

- Initial contact is usually made from persons interested in operating a Personal Care Home. Environmentalists should be on the alert for facilities operating in the community which may fall in the definition of Personal Care
- Obtain the person's name, address, and phone number
- Determine the type of program being considered (family, group, or congregate). Thoroughly explain each
- The applicant should be referred to the local Zoning Board, for approval/consideration
- If they are building, remodeling, or renovating, refer them to the appropriate agency/department/division/section: Building Inspections, Fire Marshal, Water System
- Give the applicant the packet of Personal Care Home, criminal records check information, copies of resident Bill of Rights, Admission Agreement, resident information, and a copy of the Rules and Regulations for Personal Care Homes

Permitting

- The applicant must supply a copy of the inspection report from the local fire department, building inspections, or Certificate of Occupancy jointly issued by the Fire Marshal and Building Inspections Division (whichever is appropriate), floor sketch of home (group or congregate), and criminal records check application.

- The Environmental Health Specialist will submit the above information along with the original copies of all inspections and recommendations to the State Environmental Health Section, Personal Care Home Program of the Department of Human Resources through his/her supervisor, and the program manager.
- The Environmental Health Specialist will make copies of all information relative to the proposed home and maintain complete file on said home.
- Two types of permits can be recommended:
  - Regular Permit
  - Provisional
    - "Regular Permit" means authorization granted by the Permitting Section of the Community Development Agency's Development and Inspections Division to any personnel or persons to operate a Personal Care Home; such a permit signifies satisfactory compliance with these rules and regulations.
    - "Provisional Permit" means authorization granted by the Permitting Section of the Community Development Agency's Development and Inspections Division to a person or persons to operate a Personal Care Home on a conditional basis to allow a newly established personal care home a reasonable but limited period of time to demonstrate operational procedures in satisfactory compliance with these rules and regulations, or to allow a personal care home a specified length of time to comply with these rules and regulations, provided said personal care home shall first present an acceptable plan or improvement.

Inspections

Personal Care Homes shall be inspected twice yearly at a minimum. Two inspections should be done each year; one announced and one unannounced, if time allows.

Administration and Enforcement

Waiver of Rules

Community Development may waive any rule for a stated period of time when it can be shown that the specific rule is not applicable or the waiver is needed to permit experimentation and demonstration of new and innovative approaches to the delivery of services. Results of experimentation and demonstration projects shall be submitted to the Department as prescribed by the plan under which the waiver is approved. The Department will maintain a record of and make available to interested persons information on all waivers granted under this rule.

Deemed Status

Any facility which offers personal care in addition to other services and which has been approved or licensed by an agency in accordance with specific rules and regulations or standards which are acceptable to the Department and which place

no less stringent requirements than are outlined herein, may apply for deemed status as having met the requirements of these rules and regulations.

Enforcement

A personal care home, which fails to comply with these rules and regulations, shall be subject to revocation of its permit or provisional permit and/or other sanctions provided by law. The enforcement and administration of these rules and regulations shall be as prescribed in Chapter 88-3 Enforcement and Administrative Procedure, the Georgia Health Code, Acts 1964, pp. 499 and 518, which includes provision for:

- the misdemeanor penalty for violations of rules and regulations promulgated under this title
- injunctive relief under appropriate circumstances
- the due process requirements of notice, hearing, and appeals
- Upon final determinations that a home does not comply with these rules and regulations, the Department will:
  - inform all residents in writing of the standard not being met
  - provide all residents with a list of approved facilities and agencies which will help them to relocate
  - provide the residents a minimum of 30 days in which to relocate if they wish before the Department reports to the Regional Office of the Social Security Administration the name and address of the home, which no longer meets these standards and the effective date of the determination

108.20 TRAILER PARKS

These regulations apply to any property where two or more trailers are parked for residential purposes.

Application/Permit Process

Permit required: Any person operating a trailer park shall possess and display permanently a valid permit issued by the Health Department.

Application for permit to operate a trailer park must be made in duplicate on forms provided by the Department.

To be eligible for a permit, the trailer park shall be in satisfactory compliance with these rules and any laws or regulations applicable to trailer parks, but the enforcement of which is the responsibility of an agency/department of government other than the Health Department.

A permit shall not be transferable with respect to person or location.

Plan Review

A minimum of two sets of plans needs to be provided for review and approval. Allow at least five working days for review of plans.

Inspection

All trailer parks shall be subject to inspection at reasonable hours and as often as deemed necessary by the Health Department to ensure adequate compliance with the provisions of these rules.

Each inspection report shall show compliance or non-compliance with this rule and shall show the corrective measures to be taken, and under "Remarks" shall show the date when it is anticipated such corrections are to be completed. This report shall show the date of inspection and shall bear the signature of the inspector and the signature of the person with whom the inspection was discussed.

Administration and Enforcement

Penalties

These regulations shall be enforced under Code Section 88-301 and 88-302, Georgia Laws of 1964.

108.21 TOURIST COURTS

These rules and regulations apply to any facility consisting of two or more rooms or dwelling units providing lodging and other accommodations for tourists and travelers including tourist courts, tourist cottages, tourist homes, trailer parks, trailer courts, motels, motor hotels, hotels, and any
similar place by whatever name called and any food, beverage, laundry, recreational, or other facilities/establishments operated in conjunction therewith.

Application/Permit Process

Any person operating a tourist court shall possess a valid permit issued by the Health Department. The permit must be framed and publicly displayed at all times. The permit is not transferable with respect to person or location.

To be eligible for a permit to operate a tourist court, the tourist court must be in satisfactory compliance with these rules and regulations and the provisions of law which apply to the location, construction, and maintenance of tourist courts and the safety of persons therein. A permit shall not be issued unless the owner/operator of the tourist court has paid any and all applicable fees for services.

Application for permit to operate a tourist court must be made in duplicate on forms provided by the Community Development Agency. Application forms shall be completed in all details and signed by the applicant or his/her authorized agent and submitted to the Agency together with plans and specifications at least ten days prior to the beginning of operation.

Upon receipt of any application for permit to operate a tourist court, the Health Department shall review the application and shall take such action relative to

approval or denial of said application. The permit or a statement of reasons for denial thereof shall be forwarded to the tourist court applicant by the Health Department within 30 days of receiving said application for permit.

Plan Review

When a tourist court is hereafter constructed or remodeled or an existing structure is converted for use as such, properly prepared plans and specifications for such construction, remodeling, or alteration, showing layout, arrangement, and construction materials of work areas, and the location, size, and type of installation of fixed equipment and facilities shall be submitted together with the appropriate plan review fee to the Health Department and Fire Marshal for approval before such work is begun. A minimum of two sets of plans needs to be provided for review and approval. Allow at least five working days for review of plans.

Inspection

All tourist courts shall be subject to inspection at reasonable hours and as often as deemed necessary by the Health Department to insure adequate compliance with the provisions of these rules.

The report of inspection shall show compliance or noncompliance with these rules, the correction measures to be taken, and the date when it is anticipated such corrections are to be completed. This report shall show the date of inspection and the signature of the person making the inspection.

Administration and Enforcement

The administration and enforcement of these rules and regulations shall be as prescribed in the Official Code of Georgia, Annotated, Chapter 31-5.

108.22 CONVERSION OF SINGLE-FAMILY RESIDENCE TO GROUP DAY CARE HOME/DAY CARE CENTER

A change of occupancy requires the building to conform to all requirements of the Standard Building Code. (Section 101.5.2, S.B.C.):

- State Law: Title 8, Chapter 2, Section 8.2.217 requires an existing building to comply with all the requirements of applicable state and local rules, regulations, codes, and standards for the new use.
- An investigation is required by a Georgia registered professional engineer to determine the adequacy of the existing floor system to support the increased loads.
- Full compliance with the handicap law is required.
- A handicap parking space is required with an above ground sign.
- The main entrance must be handicap accessible by means of a ramp. The ramp must be a minimum of 36" wide with a maximum slope of 1:12. Any

ramp with a rise of more than 6" or that is more than 72" long must have handrails on both sides.

- All doors must be a minimum of 3'0" with handicap hardware.
- All halls, corridors, and aisles must be a minimum of 36" wide.
- A handicap path is required with a clear turning radius of 5'.
- An investigation is required by a state-licensed electrician to determine the adequacy of the existing electrical system for the new use.
- Three sets of drawings must be submitted to the Development and Inspections Division, with approval from the Zoning Division, Water System, and State and County Fire Marshal's Offices before a permit can be issued.

108.23 CONVERSION APARTMENTS TO CONDOMINIUMS

- When construction cost exceeds 50%of valuation of the structur4e or the intent to convert to condominium, including the assignment of new tax parcels from an existing singular tax parcel, or a change in occupancy occurs, the entire structure must be upgraded to current applicable state and local rules, regulations, codes and standards for the new use, or an approved alternate but equal method. The valuation percentage will be based on the highest percentage when individually comparing the units, buildings, and complex.
- An investigation is required by a Georgia registered professional engineer to determine adequacy of the exiting floor system to support the increased loads. (when required by Structural Plan Review)
- Where utilities may cross boundary lines and/or are confined to common property locations, recorded easements as outlined by the County Attorney's Office must be implemented.
- All information required under Section 108.02 (unless included elsewhere in the plans).
- Completed application filed with Structural Plan Review Section.
- Street address from the GIS section or if each condominium has a separate address the street addresses will be shown on the final plat.
- A minimum of our sets of complete plans as required under Section 102.904, which include structural, architectural, plumbing, electrical, and HVAC drawings. See State of Georgia Disabilities Act. Type and complexity of drawings will be determined by Structural Plan Review (Complete site plan under Section 102, signed by the Plan Review Committee when doing exterior renovations or additions)
- Proof of a business license by contractor, as required by local and state law.
- Cobb County Code Compliance Bond in the amount of $10,000.
- (NOTE: The business license and the bond must read exactly the same.)
- Proof of payment for water and sewer fees if/when applicable.
- Approvals from:

Development and Inspections	Cobb County Fire Marshal

Division	
Zoning Division	**Office of Environmental Health**
Planning Division	**Water System**
Business License Division	**Department of Transportation**

- For permit approval purposes, conversions from apartments to condominiums shall be reviewed under the currently adopted Standard Building Code.
- The conversion to a condominium will not change the status of these buildings having to meet the requirements of NFPA 101 Chapters 30 or 31, Apartments. All building and their protective systems shall be maintained in accordance with Cobb County Code, section 54-54. Condominiums not separated by 2-hour fie walls shall be deemed apartments and shall be subject to the jurisdiction of the Cobb County Fire Marshal's Office. An association must be formed and the Fire Marshal's Office kept informed as to the name(s) and phone(s) of contact personnel. The association is responsible to ensure all Life Safety Code requirements are enforced.

The amount of time required for Structural Plan Review varies with the complexity of plans. A minimum of five working days is usually required. Plans are reviewed by appointment only. Walk-ins will be given appointments as time permits.

200 PLATS/RECORD DRAWINGS

200.01 APPLICABILITY

Cobb County requires that any subdivision of land into two or more parcels or lots shall be platted as described below and filed of record with the Clerk of the Superior Court of Cobb County. This shall be required for both residential and non-residential properties alike. For exemptions for this section, please see Section 203.

200.02 APPLICATION PROCESS FOR PRELIMINARY PLAT

A preliminary plat drawn on bond paper along with copy on a CD must be submitted to the Site Plan Review Section. Detailed parameters for document resolution and labeling can be obtained from the Site Plan Review Section prior to submitting the CD. The Community Development Agency, shall conduct an independent review and either approve or reject with written comments. If rejected, the applicant shall revise the plat and resubmit. If approved, the applicant shall submit the approved preliminary plat in the set of construction documents for site plan review.

201 PRELIMINARY PLAT

201.01(A) SINGLE FAMILY RESIDENTIAL PRELIMINARY PLAT SPECIFICATIONS

GENERAL

The preliminary plat shall be clearly and legibly drawn on mylar, vellum, or bond paper at a scale no smaller than 1" = 100'. The plat shall not exceed 24" X 36". In no case shall sheet size be less than 8½" X 11".

The preliminary plat shall be prepared by the appropriate design professional as required by state law, and shall show the following:

- Proposed name of residential subdivision.
- Name, address, and telephone number of owner of record.
- Name, address, and telephone number of the developer.
- Date of survey, north point with magnetic north or Georgia State Plane grid north shown and graphic scale, source of datum, date of plat drawing, and space for revision dates.
- Location (land lot and district) and gross acreage of tract.
- Vicinity map locating the subdivision in relation to the surrounding area with regards to well known landmarks such as major thoroughfares, railroads, or others. Sketches may be drawn in freehand and at a scale sufficient to clearly show the information required, but not less than 1" = 2,000'.
- Former name of subdivision if the preliminary plat has been previously submitted or subdivided.

- Exact boundary lines of the tract indicated by a heavy line giving the lengths and bearings. The boundary lines shall include the entire tract to be eventually subdivided and data as required herein shall apply to the entire tract.
- Ground elevations on the tract based on field surveys or photogrammetric methods from aerial photographs. The basis for the topographic information shall be shown. Contour lines shall be drawn at intervals of two feet.
- Natural features within the proposed subdivision, including drainage channels, bodies of water, tributary, state-mandated buffers, corridors, wooded areas, specimen tree locations and other significant features. On all water courses leaving the tract, the direction of flow and acreage of the drainage area above the point of entry into the site shall be noted. Floodplains shall be outlined. Wetland areas should also be located on the plat. Local benchmarks shall be established. State whether elevations are based on NGVD29 OR NAV88.
- Cultural features (including cemeteries or other historic features around and within the proposed subdivision); names, right of way widths and pavement widths of existing and proposed streets; city and county boundaries; and other significant information. Locations and dimensions of existing bridges; existing utility lines and structures; existing or proposed easements; existing street culverts; stormwater management lots and associated access easements and other features are to be indicated.
- Proposed layout including lot lines with rough dimensions, lot numbers, block letters, street and alley lines with proposed street names, right-of-way widths, buffers, open space, amenities, and easements dedicated for public uses.
- Proposed unit division or stage development, if any, as proposed by the owner/developer.
- Present zoning of the proposed development and the present zoning of abutting land(s).
- Zoning and variances granted stipulations/conditions placed on the project by the Cobb County Board of Commissioners and Board of Zoning Appeals.
- Number of lots.
- Each preliminary plat submitted shall carry the certifications printed or stamped thereon substantially as set forth in 201.02.
- Development agreement recording information.
- Show adjoining roadways with names, pavement widths, lengths of streets, access locations, and right-of-way widths. Also include dimensions from the centerline of the existing street to the required right-of-way width.

201.01(B) CONDOMINIUM/MULTIFAMILY RESIDENTIAL PRELIMINARY PLATS

GENERAL

The preliminary plat shall be clearly and legibly drawn on mylar, vellum, or bond paper at a scale no smaller than 1" = 100'. The plat shall not exceed 24" X 36". In no case shall sheet size be less than 8½" X 11".

- The final plat shall contain the following information:
- Name of the project and street names
- Property address numbers (furnished by the Plan Review Section of Development and Inspections)
- Reference to record subdivision plats of adjoining land by record name
- Date of plat drawing, graphic scale, and north point
- Location of tract (land lot and district)
- Location sketch at a scale of 1" = 2,000'. See note below.
- Index map on each sheet when more than one sheet is required
- Courses and distances to the nearest existing street, intersections, or other recognized permanent monuments or benchmarks
- Exact boundary lines of the tract, to be indicated by a heavy line, giving distances to the nearest 1/10 foot and angles to the nearest minute shall be balanced and closed. The error of closure shall be stated, and further the error of closure shall exceed 1 to 10,000. Tract boundaries shall be determined by accurate survey in the field

  NOTE: Unit plats shall provide a location sketch for location within the master plat.

- Land lot lines shall be accurately tied to boundary lines of the subdivision by angles and\distances when such lines traverse the subdivision; when the subdivision does not intersect a land lot line, then the lines of a major controlling street shall be projected and tied to a land lot line by angles and distances. In both cases, the measured distance from land lot tie to a respective land lot corner shall be shown with the magnetic bearing of the land lot line. No approximate land lot lines shall be shown on the subdivision plat.
- Exact locations, widths, and names of all streets and alleys within and immediately adjoining the plat, and the exact locations and widths of all crosswalks
- Street centerlines showing angles of deflection and standard curb data of intersection, radii, length of tangents and arcs, and degree of curvature with basis of curve data
- Lot lines with dimensions to the nearest 1/10-foot, necessary internal angles, arcs, and chords and tangent or radii or rounded corners
- Building setback lines with dimension
- Legal description of individual condominium units shall be as follows:
- The individual condominium unit shall be referenced as a lot by numeric data only (limited to 999 units).
- Each building shall be referenced as Unit by numeric data only (limited to 99 units).
- Each development phase shall be referenced as a block by alpha data.
- Parcel numbers shall be assigned by the tax office.

- Plats of the development shall be separated into different development phases when individual units or buildings reach the limits set forth above.
- Locations, dimensions, drainage areas, and purpose of all drainage structures and of any easements (including slope easements), flood hazard areas, public service utility right-of-way lines, and any areas to be reserved, donated, or dedicated to public use or sites for other than residential use with notes stating their purpose and limitations; and of any areas to be reserved by deed covenant for common uses of all property owners.
- Accurate locations, materials, and descriptions of monuments and markers.
- A statement referencing the protective covenants by record book and page number.
- Registered land surveyor's certification and stamp required for master plat.
- Registered professional engineer certification and stamp accepted for "as built" condition on unit plats only.
- Registered architect certification and stamp may be used to certify the acceptability of the structural work.
- Variances (if any) and date approved by the Board of Adjustments and Appeals.
- Recording of plats and plans; contents; completion of structural improvements; certification by registered architect or engineer.
- Prior to the first conveyance of a condominium unit, there shall be recorded one or more plats of survey showing the location and dimensions of the submitted property; the location and dimensions of all structural improvements located on any portion of the submitted property; the intended location and dimensions of all contemplated structural improvements committed to be provided by the declaration on any portion of the submitted property; and, to the extent feasible, the location and dimensions of all easements appurtenant to the submitted property or otherwise submitted to this article as part of the common elements. With respect to all such structural improvements, the plats shall indicate which, if any, have not been begun by use of the phrase "NOT YET BEGUN." No structural improvement which contains or constitutes all or part of any unit or units and which is located on any portion of the submitted property shall be commenced on any portion of the submitted property after the recording of the plats. The declarant shall complete all structural improvements depicted on the plats, subject only to such limitations, if any, as may be expressly stated in the declaration with respect to those labeled "NOT YET BEGUN" on the plats, provided that, within six months after written notice from the association, the declarant shall be obligated to complete within a reasonable time every structural improvement actually commenced on the submitted property, notwithstanding any provision of the declaration, unless the declarant removes within a reasonable time all portions of any such structural improvement and restores the surface of the land affected thereby to substantially the same condition as that which existed prior to commencement of any such structural improvement; and provided, further, that nothing contained in this sentence shall exempt the declarant from any contractual

liability to complete any such structural improvement. If the submitted property consists of noncontiguous parcels, the plats shall indicate the approximate distances between such parcels unless such information is disclosed in the declaration. If, with respect to any portion or portions, but less than all, of the submitted property, the unit owners are to own only a leasehold or estate for years, the plats shall show the location and dimensions of any such portion or portions and shall label each such portion by use of the phrase "LEASED LAND." To the extent feasible, the plats shall show all easements to which the submitted property or any portion thereof is subject. The plats shall also show all encroachments by or on any operation of the submitted property. In the case of any units which have vertical boundaries lying wholly or partially outside of structures for which plans pursuant to subsection (b) of this Code section are recorded, the plats shall show the location and dimensions of the vertical boundaries to the extent that they are not shown on the plans; and the units or portions thereof thus depicted shall bear their identifying numbers. Each plat shall be certified as to its accuracy and compliance with this subsection by a registered land surveyor. The specification within this subsection of items that shall be shown on the plats shall not be construed to mean that the plats shall not also show all other items customarily shown or required by law to be shown for land title surveys.

- There shall be recorded prior to the first conveyance of a condominium unit:
- Plans which have been prepared, signed, and sealed by a registered architect or registered engineer of every structure which contains or constitutes all or part of any unit or units located on or within any portion of the submitted property, which plans shall show:
- the location and dimensions of the exterior walls and roof of such structures;
- the walls, partitions, floors, and ceilings as constitute the horizontal boundaries, if any, and the vertical boundaries of each unit, including convertible space, to the extent that such boundaries lie within or coincide with the boundaries of such structures; and
- the identifying numbers of all units or portions thereof depicted on the plans; and
- A certification by such architect or engineer to the effect that he has visited the site and viewed the property and that, to the best of his knowledge, information, and belief:
- the exterior walls and roof of each structure are in place as shown on the plans; and
- such walls, partitions, floors, and ceilings, to the extent shown on said plans, as constitute the horizontal boundaries, if any, and the vertical boundaries of each unit, including convertible space, have been sufficiently constructed so as to establish clearly the physical boundaries of such unit.
- In addition, each convertible space depicted in the plans shall be labeled as such by use of the phrase "CONVERTIBLE SPACE." Unless the condominium instruments expressly provide otherwise, it shall be presumed that, in the case of any unit not wholly contained within or constituting one or more of the

structures, the horizontal boundaries extend, in the case of each unit, at the same elevation with regard to any part of such unit lying outside of such structures, subject to the following exception: in the case of any unit which does not lie over any other unit other than basement units, it shall be presumed that the lower horizontal boundary, if any, of that unit lies at the level of the ground with regard to any part of that unit lying outside of the structures. This subsection shall apply to any condominium created on or after July 1, 1980, or to the expansion of any such condominium.

- There shall be recorded prior to the first conveyance of a condominium unit plans of every structure which contains or constitutes all or part of any unit or units located on or within any portion of the submitted property and a certification by a registered architect or registered engineer to the effect that he has visited the site and viewed the property and that, to the best of his knowledge, information, and belief:
- the foundation, structural members, exterior walls, and roof of each such structure are complete and in place as shown on the plans;
- the walls, partitions, floors, and ceilings, to the extent shown on the plans, as constituting or coinciding with the vertical and horizontal boundaries of each unit, including convertible space, within each such structure, are sufficiently complete and in place to establish clearly the physical boundaries of such unit and that such physical boundaries are as shown on the plans; and
- each such structure, to the extent of its stage of completion at that time, is constructed substantially in accordance with such plans.
- The plans shall show the location and dimensions of the horizontal boundaries, if any, and the vertical boundaries of each unit to the extent that such boundaries lie within or coincide with the boundaries of such structures, and the units, or portions thereof, thus depicted shall bear their identifying numbers. In addition, each convertible space depicted in the plans shall be labeled as such by use of the phrase "CONVERTIBLE SPACE." Unless the condominium instruments expressly provide otherwise, it shall be presumed that, in the case of any unit not wholly contained within or constituting one or more of the structures, the horizontal boundaries extend, in the case of each unit, at the same elevation with regard to any part of such unit lying outside of such structures, subject to the following exception: in the case of any unit which does not lie over any other unit other than basement units, it shall be presumed that the lower horizontal boundary, if any, of that unit lies at the level of the ground with regard to any part of that unit lying outside of the structures. This subsection shall apply to any condominium created prior to July 1, 1980, or to the expansion of any such condominium.
- Prior to the first conveyance of a condominium unit located on any portion of any additional property being or having been added to an expandable condominium, there shall be recorded new plats of survey conforming to the requirements of subsection (A) of this section and, with regard to any structures on the property being or having been added, plans conforming to the requirements of subsection (B) of this section or certifications, conforming

to the certification requirements of subsection (B) of this section, of plans previously recorded pursuant to Code Section 44-3-84.

- When converting all or any portion of any convertible space into one or more units or limited common elements, the declarant shall record, with regard to the structure or portion thereof constituting that convertible space, plans showing the location and dimensions of the horizontal boundaries, if any, and the vertical boundaries of each unit formed out of such space. The plans shall be certified by a registered architect or registered engineer in accordance with the certification requirements of subsection (B) of this section.
- When any portion of the submitted property is withdrawn, there shall be recorded a plat or plats showing the portion of the submitted property withdrawn and the remaining submitted property, which plat or plats shall be certified as provided in subsection (A) of this section. (Ga. L. 1975, p.609, § 20; Ga. L. 1980, p. 1406, § 3; Ga. L. 1982, p. 3, § 44; Ga. L. 1983, p. 3, § 33; Ga. L. 1984, p. 22, § 44.)

201.01(C) NON-RESIDENTIAL PRELIMINARY PLAT SPECIFICATIONS

GENERAL

The preliminary plat shall be clearly and legibly drawn at a scale no larger than 1" = 100'. The plat shall not exceed 24" X 36". In no case shall sheet size be less than 8½" X 11". Subject to state law requirements, the preliminary or overall development plat shall be prepared by a registered landscape architect, land surveyor, or civil engineer and shall show the following:

- Proposed name of the non-residential subdivision.
- Name, address, and telephone number of owner of record.
- Name, address, and telephone number of the developer.
- Date of survey, north point with magnetic north or Georgia State Plane grid north shown and graphic scale, source of data, date of plat drawing, and space for revision dates.
- Location (land lot and district) and gross acreage of tract.
- Original vicinity map locating the subdivision in relation to the surrounding area with regards to well known landmarks such as major thoroughfares, railroads, or others. Sketches may be drawn in freehand and at a scale sufficient to clearly show the information required, but not less than 1" = 2,000'. Photocopies of a local atlas are not acceptable. Previously developed non-residential properties must be reflected on the plat.
- Exact boundary lines of the tract indicated by a heavy line giving the lengths and bearing. The boundary lines shall include the entire tract to be eventually subdivided and data as required herein shall apply to the entire tract.
- Ground elevations on the tract based on field surveys or photogrammetric methods from aerial photographs. The basis for the topographic information shall be shown. Contour lines shall be drawn at intervals of 2 feet.

- Natural features within the proposed non-residential development, including drainage channels, tributaries or state mandated buffers or corridors, bodies of water, wooded areas, and other significant features. On all water courses leaving the tract, the directional flow and acreage of the drainage area above the point of entry into the site shall be noted. Floodplains shall be outlined and elevations and total area of floodplain noted. Wetland areas should also be located on the plat and total area specified. Local benchmarks shall be established and properly described and the mean sea level elevation noted.
- Cultural features, including cemeteries or other historic features, around and within the proposed non-residential subdivision, right-of-way, pavement widths, and names of existing and platted streets; all easements, city and county boundaries, and other significant information. Locations and dimensions of bridges, proposed and existing utility lines and structures, existing or proposed easements, street culverts, and other features are to be indicated.
- Proposed layout including lot lines with rough dimensions, lot numbers, street and alley lines with proposed street names, right-of-way widths, buffers, open space, and easements dedicated for public use shall be noted.
- Proposed outparcels, supported by internal utilities and interparcel access points, must be clearly shown.
- Proposed unit division or stage development, if any, as proposed by the owner or developer including but not limited to outparcel development.
- Present zoning of the proposed development and the present zoning of abutting lands.
- Zoning and variance conditions placed on the project by the Cobb County Board of Commissioners or Board of Zoning Appeals.
- Each preliminary plat submitted shall carry the following certifications printed or stamped thereon substantially as set forth in Section 201.02.
- Development agreement recording information.
- Show adjoining roadways, with names, pavement widths, lengths of streets, access locations, and right-of-way widths. Also include dimensions from the centerline of the existing street to the required right-of-way width.

201.02 PRELIMINARY CERTIFICATION STATEMENT

The certification statement that follows shall be provided on each preliminary plat submitted for review and approval and shall be signed by the appropriate design professional:

I hereby certify that this proposed Preliminary Plat correctly represents data compiled or verified through a survey completed by me on _____ 20___, of property shown and described hereon.

or By_____
Registered Georgia Engineer No._____

or By_____
Registered Georgia Landscape Architect No._____

or By_____
Registered Georgia Surveyor No._____

201.03 PRELIMINARY PLAT APPROVAL CERTIFICATE

The following approval certification should be provided on the preliminary plat to indicate the approval and acceptance of the appropriate Cobb County agencies/departments/divisions.

All requirements of the Cobb County Subdivision Regulations relative to the preparation and submission of a Preliminary Plat having been fulfilled, approval of this plat is hereby granted subject to further provisions of said Regulations. This approval does not constitute review and approval for a required land disturbance permit and any project related improvements required by the Cobb County Zoning Ordinance or Cobb County Development Standards as part of the land disturbance permit.

This certificate shall expire on _____.

_____ _____
Development and Inspections Division Date

_____ _____
Zoning Division Date

202 FINAL PLAT

202.01(A) FINAL SINGLE FAMILY RESIDENTIAL PLAT SPECIFICATIONS

- The final plat shall be clearly and legibly drawn on mylar, vellum, or bond paper. The scale of the final plat shall be no greater than 1" = 100'. The plat shall not exceed 24" X 36". If the complete plat cannot be shown on one sheet, several sheets with an index map indicated on each sheet shall be used. In no case shall sheet size be less than 8½" X 11."
- The final plat shall conform to the preliminary plat and may constitute only that portion of the approved preliminary plat which the subdivider proposes to record and develop at any time, provided that such portion conforms to the staging established on the preliminary plat procedure and to the requirements of these rules and regulations. All plats shall be required to

meet the requirements of the Georgia Platting Act, and as may be amended from time to time.

- The final plat shall contain the following information:
- Names of the subdivision and street names.
- Property address numbers.
- Reference to recorded subdivision plats of adjoining land by record name.
- Date of plat drawing, graphic scale, and magnetic north point or Georgia State Plane grid north.
- Location of tract (land lot and district).
- Former name of subdivision, if any or all of the final plat has been previously subdivided.
- Vicinity map at a scale of 1" = 2,000'.
- Index map on each sheet when more than one sheet is required.
- Courses and distances to the nearest existing street, intersections, or other recognized permanent monuments or benchmarkers.
- Exact boundary lines of the tract, to be indicated by a heavy line, giving distances to the nearest 1/10-foot and angles to the nearest second, which shall be balanced and closed. The error of closure shall exceed 1:10,000. The tract boundaries shall be determined by accurate survey in the field.
- Provide closure statement and field data statement.
- Exact locations, widths, and names of all streets, alleys, and proposed sidewalks within and immediately adjoining the plat and the exact location and widths of all sidewalks.
- Street centerlines showing angles of deflection and standard curve data of intersection, radii, length of tangents and arcs, and degree of curvature with basis of curve data, design speeds, horizontal and vertical site distances.
- Lot lines with dimensions to the nearest 1/10-foot, necessary internal angles, arcs and chords and tangent or radii of rounded corners.
- Building setback lines with dimension.
- Lots or sites numbered in numerical and clockwise order. Blocks shall be identified alphabetically.
- Cultural features, including cemeteries and historic features, or a statement indicating that “No cemeteries, archeological or architectural landmarks are known to exist on site.”
- Location, dimensions, stormwater management structures, access easements, detention areas, and any other easements, tributary and state mandated buffers and corridors, flood hazard areas and elevations, water, sewer and drainage easements with setback requirements, and any areas to be reserved, donated, or dedicated to public use or sites for other than residential use with notes stating their purposes and limitations; and of any areas to be reserved by deed covenant for common uses of all property owners. Delineation of protected wetlands with total acreage noted.
- A statement of the private covenants, if they are brief enough to be put directly on the plat; otherwise a statement as follows:

"This plat is subject to the covenants set forth in the separate document(s) dated _____, which hereby becomes a part of this plat," recorded in Deed Book _____, page _____, Cobb County Deed Records and signed by the owner."

- Accurate location, material and description of monuments and markers. Monuments to be placed after final street improvements shall be designated as "future."
- Seal of appropriate design professional.
- Zoning stipulations and variances (if any) and the date approved by the Board of Commissioners or Board of Zoning Appeals.
- State law prohibits the private construction, planting, or otherwise making improvements on the dedicated right-of-way. The sole responsibility for repairing of any damage of any such improvement shall be the property owners.
- Tabular chart which specifies the lengths of each public street or right-of-way.

202.01(B) FINAL CONDOMINIUM/MULTIFAMILY RESIDENTIAL PLATS

GENERAL

The preliminary plat shall be clearly and legibly drawn on mylar, vellum, or bond paper at a scale no smaller than 1" = 100'. The plat shall not exceed 24" X 36". In no case shall sheet size be less than 8½" X 11".

The final plat shall contain the following information:

- Names of the project and streets
- Property address numbers (furnished by the Development and Inspections Division)
- Reference to record subdivision plats of adjoining land by record name
- Date of plat drawing, graphic scale, and north point
- Location of tract (land lot and district)
- Location sketch at a scale of 1" = 2,000'. See NOTE.
- Index map on each sheet when more than one sheet is required
- Courses and distances to the nearest existing street, intersections, or other recognized permanent monuments or benchmarks
- Exact boundary lines of the tract, to be indicated by a heavy line, giving distances to the nearest 1/10-foot and angles to the nearest minute shall be balanced and closed. The error of closure shall be stated, and further the error of closure shall exceed 1:10,000. Tract boundaries shall be determined by accurate survey in the field

NOTE: Unit plats shall provide a location sketch for location within the master plat.

- Exact locations, widths, and names of all streets and alleys within and immediately adjoining the plat and the exact location and widths of all crosswalks
- Street centerlines showing angles of deflection and standard curb data of intersection, radii, length of tangents and arcs, and degree of curvature with basis of curve data
- Lot lines with dimensions to the nearest 1/10-foot, necessary internal angles, arcs and chords and tangent or radii or rounded corners
- Building setback lines with dimension
- Legal description of individual condominium/multi-family units shall be as follows:
  - the individual condominium unit shall be referenced as a lot by numeric data only (limited to 999 units)
  - each building shall be referenced as “Unit” by numeric data only (limited to 99 units)
  - each development phase shall be referenced as a block by alpha data;
- Parcel numbers shall be assigned by the tax office
- Plats of the development shall be separated into different development phases when individual units or buildings reach the limits set forth above
- Location, dimensions, drainage areas, and purpose of all drainage structures and of any easements, including slope easements, flood hazard areas, public service utility right-of-way lines, and any areas to be reserved, donated, or dedicated to public use or sites for other than residential use with notes stating their purposes and limitations; and of any areas to be reserved by deed covenant for common uses of all property owners
- Accurate locations, materials, and descriptions of monuments and markers
- A statement referencing the protective covenants by record book and page number
- Registered land surveyor's certification and stamp required for master plat
- Registered professional engineer certification and stamp accepted for "as built" condition on unit plats only
- Registered architect certification and stamp may be used to certify the acceptability of the structural work
- Variances (if any) and the date approved by the Appeals Board
- Recording of plats and plans, contents, completion of structural improvements, and certification by registered architect or engineer
- Prior to the first conveyance of a condominium unit, there shall be recorded one or more plats of the survey showing the location and dimensions of the submitted property; the location and dimensions of all structural improvements located on any portion of the submitted property; the intended location and dimensions of all contemplated structural improvements committed to be provided by the declaration on any portion of the submitted property; and, to the extent feasible, the location and dimensions of all easements appurtenant to the submitted property or otherwise submitted to this article as part of the common elements. With respect to all such

structural improvements, the plats shall indicate which, if any, have not been begun by use of the phrase "NOT YET BEGUN." No structural improvement which contains or constitutes all or part of any unit or units and which is located on any portion of the submitted property shall be commenced on any portion of the submitted property after the recording of the plats. The declarant shall complete all structural improvements depicted on the plats, subject only to such limitations, if any, as may be expressly stated in the declaration with respect to those labeled "NOT YET BEGUN" on the plats, provided that, within six months after written notice from the association, the declarant shall be obligated to complete within a reasonable time every structural improvement actually commenced on the submitted property, notwithstanding any provision of the declaration, unless the declarant removes within a reasonable time all portions of any such structural improvement and restores the surface of the land affected thereby to substantially the same condition as that which existed prior to commencement of any such structural improvement; and provided, further, that nothing contained in this sentence shall exempt the declarant from any contractual liability to complete any such structural improvement. If the submitted property consists of noncontiguous parcels, the plats shall indicate the approximate distances between such parcels unless such information is disclosed in the declaration. If, with respect to any portion or portions, but less than all, of the submitted property, the unit owners are to own only a leasehold or estate for years, the plats shall show the location and dimensions of any such portion or portions and shall label each such portion by use of the phrase "LEASED LAND." To the extent feasible, the plats shall show all easements to which the submitted property or any portion thereof is subject. The plats shall also show all encroachments by or on any operation of the submitted property. In the case of any units which have vertical boundaries lying wholly or partially outside of structures for which plans pursuant to subsection (B) of this section are recorded, the plats shall show the location and dimensions of the vertical boundaries to the extent that they are not shown on the plans; and the units or portions thereof thus depicted shall bear their identifying numbers. Each plat shall be certified as to its accuracy and compliance with this subsection by a registered land surveyor. The specification within this subsection of items that shall be shown on the plats shall not be construed to mean that the plats shall not also show all other items customarily shown or required by law to be shown for land title surveys.

- There shall be recorded prior to the first conveyance of a condominium unit:
- Plans which have been prepared, signed, and sealed by a registered architect or registered engineer of every structure which contains or constitutes all or part of any unit or units located on or within any portion of the submitted property, which plans shall show:
  - the location and dimensions of the exterior walls and roof of such structures

- the walls, partitions, floors, and ceilings as constitute the horizontal boundaries, if any, and the vertical boundaries of each unit, including convertible space, to the extent that such boundaries lie within or coincide with the boundaries of such structures
- the identifying numbers of all units or portions thereof depicted on the plans
- A certification by such architect or engineer to the effect that he has visited the site and viewed the property and that, to the best of his knowledge, information, and belief:
  - the exterior walls and roof of each structure are in place as shown on the plans; and
  - such walls, partitions, floors, and ceilings, to the extent shown on said plans, as constitute the horizontal boundaries, if any, and the vertical boundaries of each unit, including convertible space, have been sufficiently constructed so as to establish clearly the physical boundaries of such unit.

- In addition, each convertible space depicted in the plans shall be labeled as such by use of the phrase "CONVERTIBLE SPACE." Unless the condominium instruments expressly provide otherwise, it shall be presumed that, in the case of any unit not wholly contained within or constituting one or more of the structures, the horizontal boundaries extend, in the case of each unit, at the same elevation with regard to any part of such unit lying outside of such structures, subject to the following exception: in the case of any unit which does not lie over any other unit other than basement units, it shall be presumed that the lower horizontal boundary, if any, of that unit lies at the level of the ground with regard to any part of that unit lying outside of the structures. This subsection shall apply to any condominium created on or after July 1, 1980, or to the expansion of any such condominium.
- There shall be recorded prior to the first conveyance of a condominium unit plans of every structure which contains or constitutes all or part of any unit or units located on or within any portion of the submitted property and a certification by a registered architect or registered engineer to the effect that he has visited the site and viewed the property and that, to the best of his knowledge, information, and belief:
- the foundation, structural members, exterior walls, and roof of each such structure are complete and in place as shown on the plans;
- the walls, partitions, floors, and ceilings, to the extent shown on the plans, as constituting or coinciding with the vertical and horizontal boundaries of each unit, including convertible space, within each such structure, are sufficiently complete and in place to establish clearly the physical boundaries of such unit and that such physical boundaries are as shown on the plans; and
- each such structure, to the extent of its stage of completion at that time, is constructed substantially in accordance with such plans.

The plans shall show the location and dimensions of the horizontal

boundaries, if any, and the vertical boundaries of each unit to the extent that such boundaries lie within or coincide with the boundaries of such structures, and the units, or portions thereof, thus depicted shall bear their identifying numbers. In addition, each convertible space depicted in the plans shall be labeled as such by use of the phrase "CONVERTIBLE SPACE." Unless the condominium instruments expressly provide otherwise, it shall be presumed that, in the case of any unit not wholly contained within or constituting one or more of the structures, the horizontal boundaries extend, in the case of each unit, at the same elevation with regard to any part of such unit lying outside of such structures, subject to the following exception: in the case of any unit which does not lie over any other unit other than basement units, it shall be presumed that the lower horizontal boundary, if any, of that unit lies at the level of the ground with regard to any part of that unit lying outside of the structures. This subsection shall apply to any condominium created prior to July 1, 1980, or to the expansion of any such condominium.

- Prior to the first conveyance of a condominium unit located on any portion of any additional property being or having been added to an expandable condominium, there shall be recorded new plats of survey conforming to the requirements of subsection (A) of this section and, with regard to any structures on the property being or having been added, plans conforming to the requirements of subsection (B) of this section or certifications, conforming to the certification requirements of subsection (B) of this section, of plans previously recorded pursuant to Code Section 44-3-84.
- When converting all or any portion of any convertible space into one or more units or limited common elements, the declarant shall record, with regard to the structure or portion thereof constituting that convertible space, plans showing the location and dimensions of the horizontal boundaries, if any, and the vertical boundaries of each unit formed out of such space. The plans shall be certified by a registered architect or registered engineer in accordance with the certification requirements of subsection (B) of this section.
- When any portion of the submitted property is withdrawn, there shall be recorded a plat or plats showing the portion of the submitted property withdrawn and the remaining submitted property, which plat or plats shall be certified as provided in subsection (A) of this section. (Ga. L. 1975, p.609, 20; Ga. L. 1980, p. 1406, 3; Ga. L. 1982, p. 3,. 44; Ga. L. 1983, p. 3,. 33; Ga. L. 1984, p. 22,. 44.)

202.01(C) FINAL NON-RESIDENTIAL PLAT SPECIFICATIONS

- The final plat shall be clearly and legibly drawn on mylar, vellum, or bond paper. The scale of the final plat shall be 1" = 100'. The plat shall not exceed 24" X 36". If the complete plat cannot be shown on one sheet, several sheets

with an index map indicated on each sheet shall be used. In no case shall sheet size be less than 8½" X 11".

- The final plat shall conform to the preliminary plat and it may constitute only that portion of the approved preliminary plat which the subdivider proposes to record and develop at any time, provided that such portion conforms to the staging established on the preliminary plat procedure and to the requirements of these rules and regulations.
- The final plat shall contain the following information:
- Names of the subdivision and streets
- Property address numbers (Furnished by the Development and Inspections Division)
- Reference to recorded subdivision plats of adjoining land by record name.
- Date of plat drawing, graphic scale, and magnetic north point Georgia State Plane grid north
- Gross acreage of tract, square footage of out parcel
- Location of tract (land lot and district)
- Former name of subdivision, if any or all of the final plat has been previously subdivided
- Vicinity map at a scale of 1" = 2000'
- Index map on each sheet when more than one sheet is required
- Courses and distances to the nearest existing street, intersections, or other recognized permanent monuments or benchmarkers
- Exact boundary lines of the tract, to be indicated by a heavy line, giving distances to the nearest 1/10-foot and angles to the nearest second, which shall be balanced and closed. The error of closure shall exceed 1:10,000. The tract boundaries shall be determined by accurate survey in the field
- Exact locations, widths, and names of all streets, alleys, and sidewalks within and immediately adjoining the plat and the exact locations and widths of all sidewalks
- Street centerlines showing angles of deflection and standard curve data of intersection, radii, length of tangents and arcs, and degree of curvature with basis of curve data, design speeds, horizontal and vertical site distances
- Lot lines with dimensions to the nearest 1/10-foot, necessary internal angles, arcs and chords and tangent or radii of rounded corners
- Building setback lines with dimension
- Lots or sites numbered in numerical and clockwise order; blocks shall be identified alphabetically
- Cultural features, including cemeteries and historic features
- Property/lease lines clearly delineated
- References to recorded and unrecorded access/cross parking, easements, utilities, and off-site stormwater management facility
- Location, dimensions, drainage areas, and purposes of all drainage structures, stormwater management structures, access easements, and any other easements, including slope easements, tributary and state mandated buffers and corridors, flood hazard areas and elevations, new or existing water and

sewer easements with setback requirements that are or shall be maintained by the Water System, and any areas to be reserved, donated, or dedicated to public use or sites for other than residential use with notes stating their purpose and limitations; and of any areas to be reserved by deed covenant for common uses of all property owners. Delineation of protected wetlands with total acreage noted.

- For purposes of dedication of stormwater management easements and facilities, reference should be made to the Cobb County Comprehensive Stormwater Management Quantity and Quality Ordinance.
- Accurate locations, materials, and descriptions of monuments and markers. Monuments to be placed after final street improvements shall be designated as "future."
- Seal of appropriate design professional
- Zoning stipulations and variances (if any) and the date approved by the Board of Commissioners or Board of Zoning Appeals
- State law prohibits the private construction, planting, or otherwise making improvements on the dedicated right-of-way. The sole responsibility for repairing of any damage of any such improvement shall be property owners.
- Tabular chart which specifies the length of each public street or right-of-way.

202.02 FINAL PLAT CERTIFICATES

202.01(A) FINAL SINGLE FAMILY RESIDENTIAL PLAT SPECIFICATIONS

- The final plat shall be clearly and legibly drawn on mylar, vellum, or bond paper. The scale of the final plat shall be no greater than 1" = 100'. The plat shall not exceed 24" X 36". If the complete plat cannot be shown on one sheet, several sheets with an index map indicated on each sheet shall be used. In no case shall sheet size be less than 8½" X 11".
- The final plat shall conform to the preliminary plat and may constitute only that portion of the approved preliminary plat which the subdivider proposes to record and develop at any time, provided that such portion conforms to the staging established on the preliminary plat procedure and to the requirements of these rules and regulations. All plats shall be required to meet the requirements of the Georgia Platting Act, and as may be amended from time to time.
- The final plat shall contain the following information:
- Names of the subdivision and street names
- Property address numbers
- Reference to recorded subdivision plats of adjoining land by record name
- Date of plat drawing, graphic scale, and magnetic north point or Georgia State Plain grid north
- Location of tract (land lot and district)
- Former name of subdivision, if any or all of the final plat has been previously subdivided

- Vicinity map at a scale of 1" = 2,000'
- Index map on each sheet when more than one sheet is required
- Courses and distances to the nearest existing street, intersections, or other recognized permanent monuments or benchmarkers
- Exact boundary lines of the tract, to be indicated by a heavy line, giving distances to the nearest 1/10-foot and angles to the nearest second, which shall be balanced and closed. The error of closure shall exceed 1:10,000. The tract boundaries shall be determined by accurate survey in the field.
- Provide closure statement and field data statement
- Exact locations, widths, and names of all streets, alleys, and proposed sidewalks within and immediately adjoining the plat and the exact location and widths of all sidewalks
- Street centerlines showing angles of deflection and standard curve data of intersection, radii, length of tangents and arcs, and degree of curvature with basis of curve data, design speeds, horizontal and vertical site distances
- Lot lines with dimensions to the nearest 1/10-foot, necessary internal angles, arcs and chords and tangent or radii of rounded corners
- Building setback lines with dimension
- Lots or sites numbered in numerical and clockwise order. Blocks shall be identified alphabetically
- Cultural features, including cemeteries and historic features, or a statement indicating that “No cemeteries, archeological or architectural landmarks are known to exist on site.”
- Location, dimensions, stormwater management structures, access easements, detention areas, and any other easements, tributary and state mandated buffers and corridors, flood hazard areas and elevations, water, sewer and drainage easements with setback requirements, and any areas to be reserved, donated, or dedicated to public use or sites for other than residential use with notes stating their purposes and limitations; and of any areas to be reserved by deed covenant for common uses of all property owners. Delineation of protected wetlands with total acreage noted
- A statement of the private covenants, if they are brief enough to be put directly on the plat; otherwise a statement as follows:

  "This plat is subject to the covenants set forth in the separate document(s) dated _____, which hereby becomes a part of this plat," recorded in Deed Book _____, page _____, Cobb County Deed Records and signed by the owner.”
- Accurate location, material and description of monuments and markers. Monuments to be placed after final street improvements shall be designated as "future"
- Seal of appropriate design professional
- Zoning stipulations and variances (if any) and the date approved by the Board of Commissioners or Board of Zoning Appeals

- State law prohibits the private construction, planting, or otherwise making improvements on the dedicated right-of-way. The sole responsibility for repairing of any damage of any such improvement shall be the property owners
- Tabular chart which specifies the lengths of each public street or right-of-way

202.01(B) FINAL CONDOMINIUM/MULTIFAMILY RESIDENTIAL PLATS

GENERAL

The preliminary plat shall be clearly and legibly drawn on mylar, vellum, or bond paper at a scale no smaller than 1" = 100'. The plat shall not exceed 24" X 36". In no case shall sheet size be less than 8½" X 11".

The final plat shall contain the following information:

- Names of the project and streets.
- Property address numbers (furnished by the Development and Inspections Division).
- Reference to record subdivision plats of adjoining land by record name.
- Date of plat drawing, graphic scale, and north point.
- Location of tract (land lot and district).
- Location sketch at a scale of 1" = 2,000'. See NOTE.
- Index map on each sheet when more than one sheet is required.
- Courses and distances to the nearest existing street, intersections, or other recognized permanent monuments or benchmarks.
- Exact boundary lines of the tract, to be indicated by a heavy line, giving distances to the nearest 1/10-foot and angles to the nearest minute shall be balanced and closed. The error of closure shall be stated, and further the error of closure shall exceed 1:10,000. Tract boundaries shall be determined by accurate survey in the field.

NOTE: Unit plats shall provide a location sketch for location within the master plat.

- Exact locations, widths, and names of all streets and alleys within and immediately adjoining the plat and the exact location and widths of all crosswalks
- Street centerlines showing angles of deflection and standard curb data of intersection, radii, length of tangents and arcs, and degree of curvature with basis of curve data
- Lot lines with dimensions to the nearest 1/10-foot, necessary internal angles, arcs and chords and tangent or radii or rounded corners
- Building setback lines with dimension
- Legal description of individual condominium/multi-family units shall be as follows:

  - the individual condominium unit shall be referenced as a lot by numeric data only (limited to 999 units)
  - each building shall be referenced as “Unit” by numeric data only (limited to 99 units)
  - each development phase shall be referenced as a block by alpha data
- Parcel numbers shall be assigned by the tax office
- Plats of the development shall be separated into different development phases when individual units or buildings reach the limits set forth above
- Location, dimensions, drainage areas, and purpose of all drainage structures and of any easements, including slope easements, flood hazard areas, public service utility right-of-way lines, and any areas to be reserved, donated, or dedicated to public use or sites for other than residential use with notes stating their purposes and limitations; and of any areas to be reserved by deed covenant for common uses of all property owners
- Accurate locations, materials, and descriptions of monuments and markers
- A statement referencing the protective covenants by record book and page number
- Registered land surveyor's certification and stamp required for master plat
- Registered professional engineer certification and stamp accepted for "as built" condition on unit plats only
- Registered architect certification and stamp may be used to certify the acceptability of the structural work
- Variances (if any) and the date approved by the Appeals Board
- Recording of plats and plans, contents, completion of structural improvements, certification by registered architect or engineer
- Prior to the first conveyance of a condominium unit, there shall be recorded one or more plats of the survey showing the location and dimensions of the submitted property; the location and dimensions of all structural improvements located on any portion of the submitted property; the intended location and dimensions of all contemplated structural improvements committed to be provided by the declaration on any portion of the submitted property; and, to the extent feasible, the location and dimensions of all easements appurtenant to the submitted property or otherwise submitted to this article as part of the common elements. With respect to all such structural improvements, the plats shall indicate which, if any, have not been begun by use of the phrase "NOT YET BEGUN." No structural improvement which contains or constitutes all or part of any unit or units and which is located on any portion of the submitted property shall be commenced on any portion of the submitted property after the recording of the plats. The declarant shall complete all structural improvements depicted on the plats, subject only to such limitations, if any, as may be expressly stated in the declaration with respect to those labeled "NOT YET BEGUN" on the plats, provided that, within six months after written notice from the association, the declarant shall be obligated to complete within a reasonable time every structural improvement actually commenced on the submitted property,

notwithstanding any provision of the declaration, unless the declarant removes within a reasonable time all portions of any such structural improvement and restores the surface of the land affected thereby to substantially the same condition as that which existed prior to commencement of any such structural improvement; and provided, further, that nothing contained in this sentence shall exempt the declarant from any contractual liability to complete any such structural improvement. If the submitted property consists of noncontiguous parcels, the plats shall indicate the approximate distances between such parcels unless such information is disclosed in the declaration. If, with respect to any portion or portions, but less than all, of the submitted property, the unit owners are to own only a leasehold or estate for years, the plats shall show the location and dimensions of any such portion or portions and shall label each such portion by use of the phrase "LEASED LAND." To the extent feasible, the plats shall show all easements to which the submitted property or any portion thereof is subject. The plats shall also show all encroachments by or on any operation of the submitted property. In the case of any units which have vertical boundaries lying wholly or partially outside of structures for which plans pursuant to subsection (B) of this section are recorded, the plats shall show the location and dimensions of the vertical boundaries to the extent that they are not shown on the plans; and the units or portions thereof thus depicted shall bear their identifying numbers. Each plat shall be certified as to its accuracy and compliance with this subsection by a registered land surveyor. The specification within this subsection of items that shall be shown on the plats shall not be construed to mean that the plats shall not also show all other items customarily shown or required by law to be shown for land title surveys.

- There shall be recorded prior to the first conveyance of a condominium unit:
- Plans which have been prepared, signed, and sealed by a registered architect or registered engineer of every structure which contains or constitutes all or part of any unit or units located on or within any portion of the submitted property, which plans shall show:
  - the location and dimensions of the exterior walls and roof of such structures;
  - the walls, partitions, floors, and ceilings as constitute the horizontal boundaries, if any, and the vertical boundaries of each unit, including convertible space, to the extent that such boundaries lie within or coincide with the boundaries of such structures; and
  - the identifying numbers of all units or portions thereof depicted on the plans; and
  - A certification by such architect or engineer to the effect that he has visited the site and viewed the property and that, to the best of his knowledge, information, and belief:
  - the exterior walls and roof of each structure are in place as shown on the plans; and

- such walls, partitions, floors, and ceilings, to the extent shown on said plans, as constitute the horizontal boundaries, if any, and the vertical boundaries of each unit, including convertible space, have been sufficiently constructed so as to establish clearly the physical boundaries of such unit.

- In addition, each convertible space depicted in the plans shall be labeled as such by use of the phrase "CONVERTIBLE SPACE." Unless the condominium instruments expressly provide otherwise, it shall be presumed that, in the case of any unit not wholly contained within or constituting one or more of the structures, the horizontal boundaries extend, in the case of each unit, at the same elevation with regard to any part of such unit lying outside of such structures, subject to the following exception: in the case of any unit which does not lie over any other unit other than basement units, it shall be presumed that the lower horizontal boundary, if any, of that unit lies at the level of the ground with regard to any part of that unit lying outside of the structures. This subsection shall apply to any condominium created on or after July 1, 1980, or to the expansion of any such condominium.
- There shall be recorded prior to the first conveyance of a condominium unit plans of every structure which contains or constitutes all or part of any unit or units located on or within any portion of the submitted property and a certification by a registered architect or registered engineer to the effect that he has visited the site and viewed the property and that, to the best of his knowledge, information, and belief:
- the foundation, structural members, exterior walls, and roof of each such structure are complete and in place as shown on the plans;
- the walls, partitions, floors, and ceilings, to the extent shown on the plans, as constituting or coinciding with the vertical and horizontal boundaries of each unit, including convertible space, within each such structure, are sufficiently complete and in place to establish clearly the physical boundaries of such unit and that such physical boundaries are as shown on the plans; and
- each such structure, to the extent of its stage of completion at that time, is constructed substantially in accordance with such plans.

The plans shall show the location and dimensions of the horizontal boundaries, if any, and the vertical boundaries of each unit to the extent that such boundaries lie within or coincide with the boundaries of such structures, and the units, or portions thereof, thus depicted shall bear their identifying numbers. In addition, each convertible space depicted in the plans shall be labeled as such by use of the phrase "CONVERTIBLE SPACE." Unless the condominium instruments expressly provide otherwise, it shall be presumed that, in the case of any unit not wholly contained within or constituting one or more of the structures, the horizontal boundaries extend, in the case of each unit, at the same elevation with regard to any part of such unit lying outside of such structures, subject to the following exception: in the case of any unit which does not lie over any other unit other than basement units, it

shall be presumed that the lower horizontal boundary, if any, of that unit lies at the level of the ground with regard to any part of that unit lying outside of the structures. This subsection shall apply to any condominium created prior to July 1, 1980, or to the expansion of any such condominium.

- Prior to the first conveyance of a condominium unit located on any portion of any additional property being or having been added to an expandable condominium, there shall be recorded new plats of survey conforming to the requirements of subsection (A) of this section and, with regard to any structures on the property being or having been added, plans conforming to the requirements of subsection (B) of this section or certifications, conforming to the certification requirements of subsection (B) of this section, of plans previously recorded pursuant to Code Section 44-3-84.
- When converting all or any portion of any convertible space into one or more units or limited common elements, the declarant shall record, with regard to the structure or portion thereof constituting that convertible space, plans showing the location and dimensions of the horizontal boundaries, if any, and the vertical boundaries of each unit formed out of such space. The plans shall be certified by a registered architect or registered engineer in accordance with the certification requirements of subsection (B) of this section.
- When any portion of the submitted property is withdrawn, there shall be recorded a plat or plats showing the portion of the submitted property withdrawn and the remaining submitted property, which plat or plats shall be certified as provided in subsection (A) of this section. (Ga. L. 1975, p.609, 20; Ga. L. 1980, p. 1406, 3; Ga. L. 1982, p. 3, 44; Ga. L. 1983, p. 3, 33; Ga. L. 1984, p. 22, 44.)

202.01(C) FINAL NON-RESIDENTIAL PLAT SPECIFICATIONS

- The final plat shall be clearly and legibly drawn on mylar, vellum, or bond paper. The scale of the final plat shall be 1" = 100'. The plat shall not exceed 24" X 36". If the complete plat cannot be shown on one sheet, several sheets with an index map indicated on each sheet shall be used. In no case shall sheet size be less than 8½" X 11".
- The final plat shall conform to the preliminary plat and it may constitute only that portion of the approved preliminary plat which the subdivider proposes to record and develop at any time, provided that such portion conforms to the staging established on the preliminary plat procedure and to the requirements of these rules and regulations.
- The final plat shall contain the following information:
- Names of the subdivision and streets.
- Property address numbers (Furnished by the Development and Inspections Division).
- Reference to recorded subdivision plats of adjoining land by record name.

- Date of plat drawing, graphic scale, and magnetic north point or Georgia State Plain grid north.
- Gross acreage of tract, square footage of out parcel.
- Location of tract (land lot and district).
- Former name of subdivision, if any or all of the final plat has been previously subdivided.
- Vicinity map at a scale of 1" = 2000'.
- Index map on each sheet when more than one sheet is required.
- Courses and distances to the nearest existing street, intersections, or other recognized permanent monuments or benchmarkers.
- Exact boundary lines of the tract, to be indicated by a heavy line, giving distances to the nearest 1/10-foot and angles to the nearest second, which shall be balanced and closed. The error of closure shall exceed 1:10,000. The tract boundaries shall be determined by accurate survey in the field.
- Exact locations, widths, and names of all streets, alleys, and sidewalks within and immediately adjoining the plat and the exact locations and widths of all sidewalks.
- Street centerlines showing angles of deflection and standard curve data of intersection, radii, length of tangents and arcs, and degree of curvature with basis of curve data, design speeds, horizontal and vertical site distances.
- Lot lines with dimensions to the nearest 1/10-foot, necessary internal angles, arcs and chords and tangent or radii of rounded corners.
- Building setback lines with dimension.
- Lots or sites numbered in numerical and clockwise order. Blocks shall be identified alphabetically.
- Cultural features, including cemeteries and historic features.
- Property/lease lines clearly delineated.
- References to recorded and unrecorded access/cross parking, easements, utilities, and off-site stormwater management facility.
- Location, dimensions, drainage areas, and purposes of all drainage structures, stormwater management structures, access easements, and any other easements, including slope easements, tributary and state mandated buffers and corridors, flood hazard areas and elevations, new or existing water and sewer easements with setback requirements that are or shall be maintained by the Water System, and any areas to be reserved, donated, or dedicated to public use or sites for other than residential use with notes stating their purpose and limitations; and of any areas to be reserved by deed covenant for common uses of all property owners. Delineation of protected wetlands with total acreage noted.
- For purposes of dedication of stormwater management easements and facilities, reference should be made to the Cobb County Comprehensive Stormwater Management Quantity and Quality Ordinance.
- Accurate locations, materials, and descriptions of monuments and markers. Monuments to be placed after final street improvements shall be designated as "future."

- Seal of appropriate design professional.
- Zoning stipulations and variances (if any) and the date approved by the Board of Commissioners or Board of Zoning Appeals.
- State law prohibits the private construction, planting, or otherwise making improvements on the dedicated right-of-way. The sole responsibility for repairing of any damage of any such improvement shall be property owners.
- Tabular chart which specifies the length of each public street or right-of-way.

202.02 FINAL PLAT CERTIFICATES

The following certifications and acknowledgements must appear on the final plat presented for approval. The language of each must be verbatim as it appears below:

1. Owner's Acknowledgment

Subdivisions with public infrastructure:

I hereby certify that I am the owner of the land shown on this plat (or a duly authorized agent thereof) whose name is subscribed hereto. I acknowledge that this plat was made from an actual survey, and for value received the sufficiency of which is hereby acknowledged, I do hereby convey all streets and rights-of-way, detention pond lots, water mains and sewer lines shown hereon in fee simple to Cobb County and further dedicate to the use of the public forever all alleys, parks, watercourses, drains, easements, and public places hereon shown for the purposes and considerations herein expressed. In consideration of the approval of this development plan and other valuable considerations, I further release and hold harmless Cobb County from any and all claims, damages, or demands arising: on account of the design, construction, and maintenance of the property shown hereon; on account of the roads, fills, embankments, ditches, cross drains, culverts, water mains, sewer liens, and bridges within the proposed rights-of-way and easements shown; and on account of backwater, the collection and discharge of surface water, or the changing of courses of streams.

And further, I warrant that I own fee simple title to the property shown hereon and agree that Cobb County shall not be liable to me, my heirs, successors, or assigns for any claims or damages resulting from the construction or maintenance of cross drain extensions, drives, structures, streets, culverts, curbs, or sidewalks, the changing of courses of streams and rivers, flooding from natural creeks and rivers, surface waters, and any other matter whatsoever. I further warrant that I have the right to sell and convey the land according to this plat and do hereby bind owners and myself subsequent in title to defend by virtue of these presents.

Subdivisions with private infrastructure (replaces Owner’s Acknowledgement on page 147)

I hereby certify that I am the owner of the land shown on this plat (or a duly authorized agent thereof) whose name is subscribed hereto. I acknowledge that this plat was made from an actual survey, and for value received the sufficiency of which is hereby acknowledged, do hereby convey the private roadways and utility easements to the association named on this plat for its maintenance and upkeep and the purposes and considerations herein expressed. In consideration of the approval of this development plan and other valuable considerations, I further release and hold harmless Cobb County from any and all claims, damages, or demands arising: on account of the design, construction and maintenance of the property shown hereon; on account of the roads, lack of access, fills, embankments, ditches, cross drains, culverts, water mains, sewer lines, and bridges within the proposed private roadways and easements shown; and on account of backwater, the collection and discharge of surface water, or the changing of courses of streams.

And further, I warrant that I own fee simple title to the property shown hereon and agree that Cobb County shall not be liable to me, my heirs, successors, or assigns for any claims or damages resulting from the construction or maintenance of cross drain extensions, drives, structures, streets, culverts, curbs, or sidewalks, the changing of courses of streams and rivers, flooding from natural creeks and rivers, surface waters, and any other matter whatsoever. I further warrant that I have the right to sell and convey the land according to this plat and do hereby bind owners and myself subsequent in title to defend by virtue of these presents.

_____ _____

Signature Date

_____

Print Name

2. Surveyor's Acknowledgment

I hereby certify that the plan shown and described hereon is a true and correct survey made on the ground under my supervision, that the monuments have been placed as shown hereon, and is to the accuracy and specifications required by the Cobb County Development Standards.

_____

Registered Ga. Land Surveyor

_____

Print Name

3. Cobb County Board of Health Certification

This plat has been approved for individual septic tank systems (except noted) and individual septic tank permits will be issued upon receipt of individual plans showing the septic tank system in a suitable place on the lot.

Dated this _____ day of _____ 20___.

_____
Environmental Health Program Manager,
Cobb County Board of Health

Notes on Individual Septic Systems

Out: Means unsuitable for septic system

SP: Means approval of individual site plan required prior to issuance of septic tank permit

PP: Means approval of individual plot plan required prior to issuance of septic tank permit

4. Cobb County Development Certification

This plat, having been submitted to Cobb County and having been found to comply with the Cobb County Development Standards and the Cobb County Zoning Ordinance, is approved subject to the installation and dedication of all streets, utilities, easements and other improvements in accordance with the Standard Design Specifications and the posting of a one year maintenance security.

_____ _____
Cobb County Water System Date

_____
Zoning Division Date

_____ _____
Development & Inspections Division Date

_____ _____
Cobb County Board of Commissioners Date

The following certifications and acknowledgements must appear on the final plat for any condominium or subdivision that includes private roadways and utilities:

I hereby certify as the owner of the land shown on this plat and whose name is subscribed hereto, acknowledge that this plat was made from an actual survey, and for value received the sufficiency of which is hereby acknowledged, do hereby convey the private roadways and utility easements to the association named on this plat for its maintenance and upkeep and the purposes and considerations herein expressed. In consideration of the approval of this development plan and other valuable considerations, the owner further releases and holds harmless Cobb County from any and all claims, damages, or demands arising: on account of the design, construction and maintenance of the property shown hereon; on account of the roads, fills, embankments, ditches, cross drains, culverts, water mains, sewer lines, and bridges within the proposed private roadways and easements shown; and on account of backwater, the collection and discharge of surface water, or the changing of courses of streams.

And further the owner warrants that he owns fee simple title to the property shown hereon and agrees that Cobb County shall not be liable to him, his heirs, successors or assigns for any claims or damages resulting fro the construction or maintenance of cross drain extensions, drives, structures, streets, culverts, curbs, or sidewalks, the changing courses of streams and rivers, flooding from natural creeks and rivers, surface waters and any other matter whatsoever. I further warrant that I have the right to sell and convey the land according to this plat and do hereby bind owners and myself subsequent in title to defend by virtue of these presents.

202.03 FINAL PLAT REVISIONS

Should a developer/subdivider desire to amend or revise a previously approved final plat then the developer/subdivider shall submit to the Cobb County Community Development Agency the following:

1. A letter specifically identifying the modifications/revisions to the final plat and stating that all necessary infrastructure (storm, sanitary sewer, and water) has been adjusted in accordance with Cobb County Code to address the modifications.

2. Submission of the latest recorded original final plat with a specific statement regarding the nature of the revision on the face thereof. The format for such a revision statement shall be as follows:

   This plat supersedes the plat recorded in Plat Book_____, Page_____. The purpose of this revision is to:_____.

3. If the original final plat is otherwise unavailable, then the developer/subdivider may submit a plat prepared to show the specific revision

to the original plat of record with the revisions noted thereon with references to the previously recorded plat (latest revision).

4. Approved By: _____
Cobb County Community Development Agency

_____
Cobb County Water System

_____
Cobb County Board of Commissioners

203 LOTS

203.01 GENERAL

A portion of a subdivision intended as a unit for transfer or ownership or for development or both. In determining the area and dimensions of a lot, no part of the right-of-way of a road or crosswalk may be included.

A parcel of land, whether or not platted, in single ownership, and not divided by a street.

Lot of record: A lot, which is part of an approved subdivision, a plat of which has been recorded in the office of the clerk of the superior court of the county.

203.02 DIMENSIONS

Lot Coverage shall be the percentage of a lot which may be covered with permitted or accessory buildings or structures, excluding walks, drives, and other similar uses, and recreational facilities which are accessory to a permitted use.

Lot Depth shall be the average horizontal distance between the front and rear lot lines.

Lot Width shall be the distance between the side lot lines measured along the front building line of the lot as determined by the prescribed front yard requirement. (See Sections 107.02 and 417)

203.03 LOTS ACCESSING PRIVATE EASEMENTS

In those instances where the board of appeals grants a variance for a subdivision of property lacking the minimum public road frontage and an easement is necessary for ingress and egress to the property, there shall be a maximum of three lots permitted, a minimum of 80,000 feet per lot, a minimum of 25 feet width easement, and the easement and the subdivided lots shall be platted and required to be recorded as restrictive covenants running with the land in the Clerk's Office, County

Superior Court. The board of appeals shall be authorized and directed to consider any variance application to this provision so long as the lots shall be a minimum of 40,000 square feet in size (as recommended to the Board of Commissioners per chapter 134-271), a minimum of 20 feet width easement, and a maximum of three lots.

203.04 MULTIPLE-FRONTAGE LOTS

A multiple-frontage lot is a lot fronting on two or more streets. When the frontage of one street exceeds the frontage of the other, the one with the least frontage shall be deemed the front of the lot for the purpose of determining building setbacks.

203.05 OUTLOT OR LEGEND LOT

Requirements for special lots requiring site plans should be referenced back to sections (i.e., septic tanks require site plans, floodplain requires site plans).

204 PHASED DEVELOPMENT

Each construction phase of any development shall be capable of standing on its own if subsequent phases will be constructed at some future time.

Subdivisions may be divided into units. Units may be further divided into phases. Phases may be divided into sub-phases. No subdivision element, whether phase or sub-phase, shall be served by any utility to be constructed in the future. Developed phases shall be numbered in sequence (i.e., Phase Two must follow Phase One and precede Phase Three). Sub-phases must also be labeled in a like fashion (i.e., Sub-phase B must follow Sub-phase A and precede Sub-phase C).

Units will be denoted by Roman numerals. Phases will be denoted by Arabic numbers. Units and phases may be referenced by spelling out the number, if both unit and phase are spelled out. Sub-phases are to be always referenced by alphabetic characters, beginning with the letter "A".

205 DEDICATION OF RIGHT-OF-WAY AND EASEMENTS

- Any property other than shown on approved development plats, which are to be dedicated to Cobb County in fee or by easement shall be accomplished by the following method:
- The property owner shall submit a plat demonstrating the boundary limits of the property to be dedicated consistent with the requirements of the Georgia Plat Act.
- The property owner shall execute and submit an owner's affidavit and evidence that the development is in conformity with these standards and specifications and evidence of good and marketable title in a form approved by the County Attorney’s Office.

- In the event the property is encumbered by liens or mortgages, the property owner shall furnish consent of lender/lien holder affidavits on forms approved by the County Attorney's Office.
- The property owner shall submit a deed or easement in favor of Cobb County, Georgia for such property to be dedicated.
- Unless the property is conveyed via a Development Agreement, the property owner shall furnish a maintenance bond contemporarily with the above.
- Any dedication relating to streets, sidewalks, and streetlights shall be submitted to the Department of Transportation. Any dedication relating to storm drainage, drainage channels, retention and detention, and storm sewer shall be submitted to the Stormwater Management Division of the Cobb County Water System. Any dedication relating to water lines or sanitary sewers shall be submitted to the Engineering and Records Division of the Cobb County Water System.
- All materials in the right-of-way that have salvage value, as determined by the inspector, shall remain property of Cobb County and shall be utilized as shown on the plans or returned to the Department of Transportation. Any item damaged during removal or relocation shall be replaced in kind.

206 WATER AND SEWER ACCEPTANCE AND RECORD DRAWINGS

206.01 CLOSE OUT STANDARDS

206.01.01 Acceptance of Work

- Water and sewer facilities shall be installed and tested in accordance with Sections 502, 503, and 504.
- The contractor/developer shall present the following prior to final inspection:
  - records of sewer line low pressure air testing and deflection
  - records of water line testing
- The contractor/developer shall present the following prior to final plat approval:
  - as-built plans from surveyor or engineer
  - length of sewer line installed by line size
  - length of water line installed by line size
  - cost of sewer line installed by line size
  - cost of water line installed by line size
- No issuance of water and sewer acceptance letters, nor final inspections shall occur until all downstream sewers (outfall segments) are completed.
- The developer will service and maintain the utility lines for one year after the completion of the project.
- At the end of the first year, a second inspection is conducted to determine if any damage or material failures are present, and upon repair by the

developer of any discrepancies found, the County will accept responsibility for perpetual maintenance.

206.01.02 Guidelines for Record Drawings

In addition to the information required on the construction plans record drawings must contain the following information:

- Water record drawings shall be a separate plan from the sewer record drawings plan.
- Maximum plan size shall be 30" x 42".
- Scale no larger than 1" = 20' and no smaller than 1" = 100'.
- No hand-drawn or marked up construction plans will be accepted as records drawings.
- Copies are to be clear and legible.
- “Record drawing” is to be stamped in large clear print on the plans.
- When a phase of a subdivision is completed, a location sketch of the entire subdivision with said phase outlined should appear on the plans.
- Record drawings shall contain the developer’s name, address, and phone number.
- Contractor’s name, address, and telephone number shall be shown.
- Land lots and districts shall be shown.
- All lots are to be numbered.
- Out lots shall be noted.
- Road names and ROW width shall be shown.
- Easements must be shown on records drawings.
- No contour lines.
- All water meter locations must be shown.
- Fire Hydrant make and model numbers for each hydrant.
- All sanitary service lateral and clean out locations must be shown.
- All laterals shall be stationed from a manhole.
- Invert and top elevations shall be shown for all manholes.
- Profiles must be included in all sewer records drawings.
- Drawings must be submitted in both hard copy and digital formats. Digital formats must be Autocad.DWG or Microstation.DGN
- Slopes for any sewer laid at 1% grade or less will be field verified after construction and shown on the record drawing.
- Engineering and Records Division shall be provided X,Y,Z locations, based upon state plane coordinates, of water valves, fire hydrants and sanitary sewer manholes.

207 DIGITAL DATA SUBMISSION STANDARDS

Cobb County has adopted geographic information system (GIS) technologies to store, manage and maintain geographic/spatially-related data. The civil engineering community has evolved as well to the point where the predominant design

environment is computer aided design and drafting (CAD) or GIS. It is the goal of the County to use both CAD and GIS technologies to expedite the design and review processes within the administration, by developing standards and procedures for integration of digital engineering CAD drawings in to the GIS environment, maintaining the integrity and positional accuracy of the data.

Below are the requirements and options for submission of digital data as required for County construction projects. Please note that those levels shown in bold italics are REQUIRED concurrent with plan submission.

207.01 FILE FORMAT

Acceptable file formats are Autocad.DWG, Microstation.DGN, ESRI Shapefile.SHP or ESRI Personal Geodatabases.

Acceptable media formats for data submission include CD's, DVD's or email.

207.02 COORDINATE SYSTEM

The standard coordinate system for all digital mapping in Cobb County shall be in the Georgia State Plane Coordinate System, West Zone, 1983 North American Datum. This coordinate system uses base units of US Survey foot.

207.03 OTHER INFORMATION

1. Contact name; 2. Contact phone number; 3. Contact address.

207.04 OVERVIEW OF LAYERS

Cobb County recognizes that each engineering and design firm has created their own set of standard CAD and data layers. Therefore Cobb County will accept digital files with any layering scheme as long as there is sufficient separation of categories. Listed below are the minimum layer categories for separation:

TRANSPORTATION LAYER
CADASTRAL LAYER
CULTURAL LAYER
HYDROLOGY LAYER
OTHER UTILITY LAYER
CONTROL LAYER
TOPOGRAPHY/DTM LAYER
WATER LAYER
SEWER LAYER

Source: Cobb County, Georgia: Standards for Digital Mapping and Geographic Information Systems. April 2012

208 MIXED-USE DEVELOPMENTS

208.01 PRE-APPLICATION MEETINGS

It is strongly recommended that mixed-use development applicants make arrangements for a pre-application conference in accordance with the procedures set forth in Section 101.02.

208.02 PRELIMINARY PLAT

The preliminary plat shall show the entire mixed-use development and conform to the standards for preliminary plats set forth in Section 201.

Include in the set of drawings for the preliminary plat a master plan shown on a single sheet (regardless of size). On the master plan, show all road and building locations, but no topographic or utility information. Also, delineate and label the different use types and any units, phases, or sub-phases of any proposed single-family residential (SFR) areas (if known).
Any layout revisions to construction plans must be accompanied by corresponding revisions to the master plan.

208.03 PERMITS

A full land disturbance permit will be required for each SFR unit, phase and sub-phase and for each distinct use area (condominiums, townhomes, retail/townhomes, etc.). Each permit application must be accompanied by a set of drawings that include the preliminary plat, master plan and construction plans for the SFR unit, phase, sub-phase or other use area indicated. Provide a distinct name for each use area.

Mass grading and shared infrastructure installation across use areas can be accomplished through a land disturbance permit that is separate from the individual permits discussed in the previous paragraph. A mass grading/infrastructure permit shall not preclude the need for the individual permits.

208.04 FINAL PLAT

The final plat for each SFR unit, phase, sub-phase or other use areas shall conform to the standards for final plats set forth in Section 202.

300 SECURITIES AND ENFORCEMENT

Cobb County requires certain securities to ensure completion of all development. They are explained in detail later in this section.

301 MAINTENANCE & PERFORMANCE SECURITIES

301.01 MAINTENANCE SECURITIES

A maintenance bond, letter of credit, or other equivalent form of security as approved by the County Attorney, running in favor of the County, shall be posted with the County by all subdividers/persons where street or other improvements are made and offered to the County for acceptance and maintenance. The amount of this security will be calculated by the formula specified in the County Code and shall be filed with the County **before** the final plat is recorded by Cobb County. Any bond, letter of credit, or other equivalent form of approved security shall be on forms supplied or approved by the County. No securities shall be terminated or otherwise allowed to expire without at least 30 days prior written notice to that effect to both the County and the subdivider/person. Separate bonds are required for each subdivision unit, phase, or like entity. The subdivider/person shall maintain all improvements in the subdivision to be dedicated to the County, for a minimum of one year from the issuance date of the security or the recording of the final plat. No dedication of improvements shall be accepted by the County until the expiration of one year from such date and inspection and determination by the County at the expiration of such time that all the improvements meet all County specifications and requirements under the ordinance.

If a period of 18 months elapses from the commencement of the maintenance period for any subdivision and defects, noncompliance, or violations still exist to the extent that the subdivision has not been accepted by the County, the County is authorized to withhold issuance of any and all permits or to refuse inspections to any subdivider/person on the project in dispute or any other project in which the subdivider/person may have a financial interest, or both, who violates or fails to comply with this ordinance.

301.01.01 Guarantee of Installation and Performance

Each subdivider/person shall guarantee installation of improvements and faithful performance of all provisions of County specifications and this ordinance. The subdivider/person shall maintain a performance bond, letter of credit, or other equivalent form of security in an amount that is 110% of the construction cost of all improvements including landfill, as estimated by the subdivider's/person's professional engineer and verified by the Director of the Community Development Agency or his/her designee. Said bond, letter of credit, or other equivalent form of security shall be on forms supplied by the County. In lieu of installation of improvements, surety bond, letter of credit, or other equivalent form of security, the

subdivider/person may provide a first mortgage to the County on the property to satisfy the subdivider's/person's guarantee. In the event that a subdivider/developer shall not have completed all requirements of the construction plans and desires to record a final plat, the plat may be recorded subject to the posting of a performance security in a form acceptable to the County Attorney's Office approved by the Board of Commissioners. Each subdivider/person shall guarantee installation of improvements and faithful performance of all provisions of County specifications and the County ordinance as applies to performance securities. The subdivider shall maintain a performance bond, letter of credit, or other equivalent form of security in an amount specified by the applicable ordinance. This security shall be on forms supplied by the County. Separate bonds as required by Section 301.01.01 of these standards shall be required for each subdivision unit, phase, or like entity approved by the County pursuant to these standards.

301.01.02 Existing Subdivision

The provisions of this ordinance shall remain in effect, even if inconsistent with the amendments effective upon adoption, as to those subdivisions existing and as to any subdivider/person who has initiated the approval procedure for subdivisions on or before the effective date of these amendments for that subdivision's phase, unit, or like entity only. The applicable provisions of the ordinance and terms of the ordinance existing on the date hereof are specifically incorporated by reference hereof; provided, however, that all other subdivision phases, units, or like entities initiated after the effective date of the ordinance, including subdividers/persons who may have been previously grandfathered, shall be subject to the ordinance, as amended upon adoption of these amendments.

301.02 INTERJURISDICTIONAL SECURITIES

Where a jurisdictional boundary line is within a city or other governmental jurisdiction then the requirements for a performance and maintenance security shall be required as set forth above.

302 ENFORCEMENT

These Development Standards are designed to be enforced by the jurisdictional County staff responsible for the applicable review or permitting. Likewise, see the specific development ordinances for more detail.

303 STOP WORK ORDERS

In the event a site is not in compliance or a violation exists under these Development Standards and Specifications, any applicable agency/department/division shall be authorized to issue a stop work order under the following procedure:

- Except in an emergency or a circumstance involving a health or safety issue, the applicable agency/department/division representative shall first issue a written notice of non-compliance as may be required by the applicable chapter of the Cobb County Code.
- In the event a reinspection is called for and the site remains in noncompliance, the applicable agency/department/division shall issue a stop work order.
- Fines and penalties are assessed in accordance with the governing ordinance from the date of the original notice of violation.
- Upon issuance of a stop work order by any County agency/department/division, all work by the noncomplying party shall be halted until one of the following occurs:
- Work shall be allowed to bring the site into compliance or
- A performance security in favor of the County in the amount of not less than 125% of the engineer's estimated completion cost of bringing the site into compliance is received.

401 STREETS

401.01 GENERAL

The character, width, grade, and location of all public streets shall conform to the standards in these Regulations and shall be considered in their relation to existing and planned streets, to topographical conditions, to public convenience and safety, and in their appropriate relation to the proposed uses of the land to be served by such streets. Construction and material specifications for streets shall conform to Georgia DOT Standard Specifications for Roads, except as may otherwise be stated herein. Specifications and design criteria stated herein are for planning purposes. Design exceptions will be considered on a case-by-case basis and it is the responsibility of the developer and his engineer to identify the exceptions in the concept and preliminary design stages. Exceptions/variances will be subject to approval by the Director of the Cobb County Department of Transportation.

- Thoroughfares in developments shall be planned in conformity with the Comprehensive Plan, and the Major Thoroughfare Plan. These streets classified, or designated to be classified, as an arterial, major collector, or minor collector shall be developed per Section 401.20.
- The proposed development's street layout shall be coordinated with the street system of the surrounding area or with plans for streets in said area on file with the County, if any.
- If the developer desires to provide for street access to an adjoining property, proposed streets shall be extended by dedication to the boundary of such property and a temporary paved turn-around provided.

401.02 RIGHT-OF-WAY

MINIMUM RIGHT-OF-WAY PER STREET CLASSIFICATION*

STREET CATEGORY	MINIMUM RIGHT-OF-WAY	AS MEASURED FROM CENTERLINE
Arterial	100'	50'
Major Collector	80'	40'
Minor Collector	60'	30'
Local (Residential Subdivision)	50'	25'
Non-Residential Local	60'	30'

* Additional street right-of-way width may be required to be dedicated at intersections or other locations fronting the property where turning lanes, storage

lanes, medians, or realignments are required for traffic safety and minimum right-of-way standards would be inadequate to accommodate the improvements.

** Right-of-way variable depending upon roadway design and Cobb DOT approval.

Additional Right-of-Way and/or Pavement Widths

- Right-of-way for all abutting and internal public streets, existing and proposed, may be dedicated in accordance with the street classifications as shown on the Major Thoroughfare Plan, and as contained in these Regulations, or as otherwise required by the Board of Commissioners.
- On any existing street that abuts a property, one-half of the required width of right-of-way shall be dedicated to Cobb County as measured from the centerline of the roadway.
- Right-of-way miters are required at all intersections to provide area for adequate utility location and maintenance. Twenty (20) foot miters shall be provided at the right-of-way intersection of any major thoroughfare. Ten (10) foot miters shall be provided at the right-of-way intersection of any local and collector roads.
- If a new street or thoroughfare is funded by the Cobb DOT or the State of Georgia to adjoin or traverse the property, the proposed road right-of-way shall be incorporated into the development plans of the property in accordance with these regulations. These right-of-way requirements shall govern except where there exists clearly defined plans of the GA DOT or Cobb DOT, which require additional right-of-way. In that case, the greater right-of-way requirements shall govern.
- Any development with property fronting on an existing County road for which there exists clearly defined plans by the GA DOT or Cobb DOT, may be required to provide road improvements associated with the defined plans. In such cases, in lieu of the design and construction, at the discretion of the Board of Commissioners, the developer shall escrow the dollar equivalency of required improvements (including curbing, utility relocation, and drainage structures), as estimated by the developer and verified by the Cobb DOT Engineering Division. These funds shall be deposited in the appropriate road construction account prior to the Approval of Development improvements or within 30 days of County award of a construction contract, whichever occurs first.

401.03 ROADWAY/LANE WIDTHS

A minimum of 10-foot travel lanes is required on all streets. Roadway widths and lane assignments are typically based upon the functional classification of said roadway; for Major Thoroughfares see Section 401.20.

Roadway width and design may be variable based upon current and/or proposed operational characteristics of the roadway and is subject to Georgia D.O.T. and/or Cobb D.O.T. review and approval. Median divided roadways may be required with left-turn bays and median breaks in lieu of center two (2) way left turn lanes.

401.04 IMPROVEMENTS ALONG STATE HIGHWAYS

For any development that abuts a state highway or other right-of-way controlled by the State of Georgia, improvements to the roadway and the location and design of any street or driveway providing access from the state highway shall comply with the standards and requirements of GA DOT. A permit for the proposed access or improvements shall be required to have been approved by the GA DOT and incorporated into the construction drawings for the project prior to issuance of a development permit by the Cobb County Community Development Agency.

401.05 SUPERELEVATION AND RUN-OFF

Widening sections along existing streets shall be designed reflecting existing curvature and superelevation, if any, unless the existing street has been included in a specific design by the County or GA DOT which calls for different standards, in which case the project will be coordinated with the overall design (excluding local residential streets).

Roadway edge curves shall be provided for tangent runout (bringing edge from a normal crown to centerline elevation) and superelevation runoff (from the end of tangent runout to the point of design superelevation) in accordance with design standards of AASHTO, latest edition.

401.06 UNIMPROVED ROAD

In the event that a subdivision and/or development has access to a substandard street (i.e., a dirt or gravel road), the following improvements shall be considered through a Development Agreement:

- If the abutting substandard street provides the primary means of access to the development and is dirt or gravel, the street shall be upgraded to the classification of the roadway from the end of the improvements required to the nearest standard paved road along the route of primary access.
- Where lots do not front onto, but the access is other than primary, in addition to the road widening requirements abutting the development access, a drainage ditch, shoulder, and adequate base shall be provided and the roadway paved on the opposite side of the road from the project, minimum of ten (10) feet from centerline to edge of pavement.
- Where lots do not front onto, but the access is other than primary**,** in addition to the road Off-site improvements required above, shall at a minimum result in a full-section roadway meeting the requirements of a local residential rural roadway of 24 feet, edge to edge of pavement, with drainage ditches as needed. Responsibilities shall be as follows:

- The developer shall design the road and provide the labor, equipment, and materials required for roadway improvements and necessary drainage improvements.
- All right-of-ways required for these off-site improvements shall be considered in the Development Agreement.

401.07 INTERSECTION DESIGN

For an intersection that contains at least one street classified in the Major Thoroughfare Plan, refer to Section 401.20.

401.07.01 Angle of Intersection

Intersections shall be at right angles and shall not be at an angle of less than 75° for reasons of safety, topography, interference with utilities, or separation from other driveways.

401.07.02 Intersection Radius

Intersection radii for all streets shall be measured at the back of curb or edge of pavement, if no curb exists. The minimum roadway radius for the intersection of local and residential collector streets is 25 feet. When a local or residential collector intersects a higher classification of roadway, the radius shall be a minimum of 35 feet. Larger radii may be required for streets intersecting at an angle of less than 90° or when a vehicle and operating circumstances dictate. The radii can be reduced a maximum of five ten feet for the following reasons:

- Separation from street or
- Removal of obstruction

401.07.03 Intersection/Corner Sight Distance

Intersections shall be designed with adequate corner sight distance for each street, which approaches a street of higher street category. Where necessary, back slopes shall be flattened and horizontal or vertical curves lengthened.

The minimum corner sight distance requirement shall be calculated per Standard 401B.

401.07.04 Vertical Alignment/Intersection Approaches

For the intersections of local and residential collector streets, a leveling of the street at a grade not exceeding 2% shall be provided for a minimum tangent length of 25 feet. Exemptions are allowed for topographic considerations as determined by the design professional and the Director of Cobb DOT.

As a street approaches an intersection with a street classified in the Major Thoroughfare Plan, the approach shall be in accordance with the Plan Preparation Manual Engineering Division, latest edition.

Tangent length is measured from edge of pavement of the intersecting street to the point of curvature in the approaching street.

This grade for the landing may be 1%.

401.07.05 Horizontal Alignment/Intersection Approaches

New local streets, which approach an intersection with a street in a higher category on a horizontal curve having a centerline radius less than 240 feet, shall provide a tangent section of roadway at least 30 feet long. The tangent length shall be measured along the centerline of the street from the right-of-way line of the intersecting street extending to the point of tangency with the centerline of the curve section.

Minor and Major Collector classified streets in the Major Thoroughfare Plan shall provide tangent sections at intersections with streets in equal or higher categories as needed to provide adequate stopping sight distances at their design speeds; see Section 401.13.

401.07.06 Stormwater Design for Intersections

For intersections classified under the Major Thoroughfare Plan, sheet or concentrated flows of water will not be permitted through the intersection.

401.08 NEW/PROPOSED STREETS

401.08.01 General

All proposed new streets shall be designed and constructed to the standards contained in these Regulations in accordance with the classification of said streets.

The arrangement of local streets shall permit practical patterns, shapes, and sizes of development parcels. Street layout must strike a balance with proposed land use so as to not unduly hinder the development of land. Distances between streets, angles of intersections, numbers of streets, and related elements all have a bearing on efficient lot layout of an area.

401.08.02 Local Residential Streets

Local residential streets shall be 24 feet wide as measured back curb to back of curb. This provides for a 10-foot lane in each travel direction. This does not provide for any street parking.

Local residential streets shall provide fire department access to within 150 feet of all portions of residential structures.

When projects contemplate less than 20 foot separation between units, emergency vehicle access can be accomplished by any of the following methods or combinations of methods:

- Parking spaces as required by zoning in addition to .50 guest parking per unit.
- Streets shall be designated as fire lanes, appropriately marked/identified in accordance with Cobb County Code, Section 118-231.

All structures except detached single family homes over 30 feet in height measured from the lowest level of fire department vehicle access to the ceiling level of the highest occupiable floor shall be provided with approved fire apparatus access roads capable of accommodating fire department aerial apparatus. Overhead utility and power liens shall not be located within the aerial fire apparatus access roadway. Aerial apparatus access roads shall have a minimum unobstructed width of 24 feet face of curb to face of curb. The access road shall be located a maximum of 40 feet from the structure and shall be positioned parallel to the long side of the building for its entire lenth.

Residential townhome style developments may be allowed to increase the 30 foot height requirement to 35 feet if one of the following items is met:

- The structure is built of noncombustible construction.
- Building built of Type V construction (combustible construction(shall meet one of the following items:
  - Structural members are sprayed with a fire retardant spray meeting a flame spread of 10 or less and smoke development of 450 or less.
  - Structure is protected with a sprinkler system and the attic space is protected with a dry sprinkler system.
  - Each dwelling unit is separated by a two hour masonry fire wall, wall shall extend vertically above the roof a minimum of 30 inches and horizontally past the exterior walls a minimum of 18 inches.

A 4 foot sidewalk may be used as part of the required 24 feet aerial apparatus lane if all of the following items are met:

- Sidewalk shall be able to support 52,000 pounds or an equivalent in PSI.
- Sidewalk shall be adjacent to the road.
- Roll back curb shall be used versus L back curb.
- Grass pavers shall not be allowed.
- Decorative hard pavers shall be allowed.

Gates

Gates securing fire apparatus access shall be a minimum 14 feet in clear width for a single lane. Double lane gates shall be a minimum of 20 feet in clear width. Gates shall be of the swinging or sliding type. Electric gates shall be equipped with a means of opening the gate by fire department personnel for emergency access. Emergency opening devices shall be approved by the Cobb County Fire Marshal's Office.

401.08.03 Non-Residential Local Streets

Local non-residential streets shall be laid out so that use by through traffic will be discouraged. The functional and operational characteristics of the roadway shall be to provide access to adjacent non-residential lots.

401.08.04 Minor & Major Collector Streets

Collector streets shall be provided to channel through traffic movements within a development as part of or in addition to the current thoroughfare network. Actual classification of said roadway will be determined by the Cobb DOT after review of the functional and operational characteristics of the roadway and adequate traffic study including, but not limited to trip generation data, as provided by the developer.

401.09 CUL-DE-SACS

Dead end streets designed to have one end permanently closed shall provide a cul-de-sac turnaround. Cul-de-sacs shall conform to the layout and dimensional requirements as shown in the Standard Details.

Non-residential cul-de-sacs shall have a 60' paved radius.

Non-standard cul-de-sacs will be evaluated individually and may be constructed with a landscaped island (subject to approval by the Fire Marshall) to be maintained by the Homeowners Association in perpetuity.

401.10 MINIMUM CENTERLINE OFFSETS AND INTERSECTION SEPARATION

Streets shall either directly align or have offsets of a minimum of 125 feet for intersecting streets on opposite sides of the through street and a minimum of 250 feet for streets on the same side of the through street, as measured between centerlines of said streets.

401.11 STREET GRADES AND DESIGN SPEEDS

401.11.01 Minimum Grades

Minimum grade for all streets shall be 1½%.

Grades of less than 1½% may be approved by the Director of Cobb D.O.T, based on adequate engineering designs, where at least 1½% cannot reasonably be achieved due to topographical limitations imposed by the land. In such cases, an as-built drawing and such computations as necessary shall be provided after construction to establish that the street will drain in accordance with these regulations. Street sections where unacceptable pooling, excessive spread at catch basins, or other hazardous conditions occur shall be reconstructed or otherwise improved to eliminate such conditions.

401.11.02 Maximum Grades

Maximum grade for all local residential streets shall be 18%. Grades between 14% and 18% shall require an "as graded" survey prior to the installation of the curb or utilities.

MAXIMUM GRADES	
STREET CATEGORY	MAXIMUM GRADE
Arterial	8%
Major Collector	10%
Minor Collector	12%
Local	18%
Non-Residential Local	14%

Maximum grade on any cul-de-sac turnaround shall be limited by drainage concerns. Negative grade cul-de-sacs will require vertical face curbing.

Maximum grade in excess of those listed above may be approved by the Director of Cobb D.O.T. or his/her designee in order to address topographical safety, hydrological, and environmental concerns.

401.12 VERTICAL ALIGNMENT

Vertical alignment must be designed in conjunction with the horizontal alignment. All changes in street profile grades having an algebraic difference greater than 1% shall be connected by a parabolic curve.

Minimum safe stopping sight distance is a direct function of the design speed of 25 mph in residential and 35 mph in local, non-residential, and commercial areas. A height of eye of 3½ feet and height of object of 2-feet is used to determine safe stopping sight distance. See Standard Detail 108.

The minimum length of vertical curve required for safe stopping sight distance shall be calculated using AASHTO "Policy on Geometric Design of Highways and Streets", latest edition.

401.13 HORIZONTAL ALIGNMENT

For streets classified by the Major Thoroughfare Plan, see Section 401.20.

HORIZONTAL CURVES

STREET CATEGORY	MINIMUM RADIUS (FT)	MAXIMUM SUPERELEVATION
Local	100	Normal Crown
Non-Residential Local	150	Normal Crown

As a traffic-calming feature, provide a maximum tangent length of 500 feet between slow points such as a curve with a centerline curvature radius between 300 feet and 100 feet. Where this cannot be accomplished, optional traffic calming features will be considered by the Director of Cobb DOT on a case-by-case basis. Consideration for shape of property, topography, and environmental features will be accepted.

A minimum tangent is required between reverse curves to facilitate steering and control. Between reverse horizontal curves there shall be not less than the minimum centerline tangents shown in the following table. Compound radii curves are prohibited, except local residential streets.

TANGENTS

STREET CATEGORY	MINIMUM TANGENT LENGTH
Local	50 Feet
Minor & Major Collector	100 Feet
Non-Residential Local	75 Feet

401.14 PAVEMENT SPECIFICATIONS

MINIMUM CONSTRUCTION STANDARDS*

STREET CATEGORY	BASE	BINDER	TOPPING
Local	8” GAB	1½" B	1½" E

* **NOTE:** Unless otherwise specified by Cobb County DOT or GA DOT.

Pavement of sections of existing roads of less than 4' in width shall have a minimum of 6" Class “B” concrete base and 1" asphaltic topping.

For non-residential local streets and industrial park developments the pavement section, shall be 10" of GAB, 4" of asphaltic base, 2" of binder, 1½" type “E” topping, and bituminous tack coat applied per GA DOT specifications.

Engineers can submit alternate pavement designs.

401.15 CURBS AND GUTTERS

All new streets or street widening sections shall be provided with curb and gutter except where noted otherwise within these regulations or where not required per zoning, where ditches may be provided in lieu of curbing. All gutters shall drain positively with no areas of ponding.

401.15.01 Curbing

Concrete shall be Class “A” (as defined by GA DOT) and have a minimum strength of 3,000 psi at 28 days.

Typical minimum section (residential subdivision only) shall be 6" x 24" x 12" for vertical curb (see Standard Detail # 106) unless otherwise specified by Cobb DOT or Georgia DOT. A six (6”) inches by thirty (30”) inches by twelve (12”) inches section may be required on non-residential local and collector roads.

½-inch expansion joints or pre-molded bituminous expansion joint material shall be provided at all structures and radius points and at intervals not to exceed 250 feet in the remainder of the curb and gutter as shown on Standard Detail 106.

When the development ties into existing curbing, the curb and gutter shall match the existing width.

401.15.02 Minimum Grades

Curb and gutter shall be set true to line and the grade of the street, horizontally field staked, and finished to the section shown on the plans. Along the widening section of a road, which Cobb DOT has identified for resurfacing within one year of the construction, the grade of the new gutter shall be placed one inch above the widening pavement grade in areas where drainage will not be adversely affected.

Line and grade shall be set by developers’ engineer or surveyor.

401.15.03 Other Requirements

Bridges, Arches, Etc. Before “accepting” a structure, the developer is to provide copies (PDF the best) of the following documents:

- Overall Project Plan
- Hydraulic Study for structures at stream crossings
- Bridge Foundation Investigation
- As-built bridge plans (this includes the actual elevation of the bottom of footings and tip of the piles)

- Bridge construction inspection reports
  - Inspector
  - Materials
  - Concrete Cylinder breaks
  - QA reports

Inferior workmanship or unprofessional construction methods resulting in unacceptable curb and gutter will be cause for rejection of the finished work. Disturbed areas along all curbing shall be back-filled, stabilized, and grassed.

401.16 SUB-GRADE PREPARATION

- Sub-grade preparation on all non-local streets shall be in accordance with GA DOT specifications and these Regulations. Sub-grade preparation for local streets shall meet and pass proof roll testing. Density testing may be required by inspector.
- If any section of the sub-grade is composed of topsoil, organic, or other unsuitable or unstable material, such material shall be removed and replaced with suitable material and then thoroughly compacted as specified for fill, or stabilized with stone or a geo-textile or geo-grid.
- Fill shall be placed in uniform, horizontal layers not more than eight inches thick (loose measurement). Moisture content shall be adjusted as necessary to compact material to 95% of maximum dry density except for the top twelve inches, which shall be compacted to 100% of maximum dry density.
- After the earthwork has been completed, all storm drainage, water, and sanitary sewer utilities have been installed within the right-of-way as appropriate, and the back-fill in all such ditches thoroughly compacted, the sub-grade shall be brought to the lines, grades, and typical roadway section shown on the plans.
- Utility trenches cut in the sub-grade shall be back-filled as specified herein. Compaction tests at the rate of one per 150 feet of trench shall be provided to verify compaction.
- The sub-grade must pass proof roll testing regardless of compaction test prior to placement of the base material. With the approval of the Community Development Agency, a geo-textile or grid may be used to stabilize a sub-grade that does not pass proof-rolling.
- Provisions shall be made to drain low points in the road construction when the final paving is delayed. A break in the berm section is required when the curbing has not been constructed. After installation, drainage under the curb is required.

401.17 SIGNING AND STRIPING

On local residential streets, signs will be provided by Cobb County Department of Transportation for a fee. Pavement markings are to be provided by the developer on local residential roadways. Developer can at their own expense install residential

street signs after plan approval by Cobb DOT Traffic Operations Division. On major thoroughfares and for non-residential development, signs and pavement markings are to be provided by the developer. For standard marking and raised pavement marker installations, contact Cobb DOT. The traffic control devices must comply with the MUTCD and be approved by Cobb DOT. No traffic control devices shall be installed without prior approval by Cobb DOT Traffic Operations Division.

401.18 STREET LIGHTS

In accordance with the Cobb County Street Lighting Ordinance, Section 3-23-41, street lights shall be provided by the developers of all new subdivisions or other developers utilizing roads or any combination, unless waived by the Board of Commissioners. The applicable power company will design a lighting layout and submit it to Cobb DOT for approval. Upon approval, the developer will pay the power company for all costs associated with the installation. Building permits and water meters will not be issued until this requirement is satisfied.

401.19 STREET NAMES AND ADDRESSES

401.19.01 Street Addressing

The Community Development Agency has the responsibility of maintaining the street addressing system throughout the county, and coordinates with the Public Safety Agency, the E911 Communication Bureau, the Department of Transportation/Operations Division and the U.S. Postal Service (USPS). The goal is to ensure that addresses are assigned and properly maintained in a logical, sequential order for the purposes of locating property anywhere in the county. An accurate addressing system facilitates quicker response times for emergency services, and provides efficient mail delivery. Correct property identification is also necessary for locating utilities.

Street numbers and addresses shall be assigned, changed and/or corrected where deemed necessary to assure the health, safety, and welfare of all Cobb County residents and property owners. Street names must be verified by the Development and Inspections Division before a preliminary subdivision plat can be approved. Street numbers shall be posted and maintained in a prominent place on the property (i.e. building façade, mail box, signage, etc.), which is visible from the street providing public access (Official Code of Cobb County, Georgia Chap. 106, Sec. 106-2). The numbers shall be posted in the following manner:

1. For residential properties, in figures at least one inch (1”) high with a contrasting background; and

2. For commercial properties, in figures at least two inches (2”) high with a contrasting background.

Cobb County utilizes a grid system for assigning street names and numbers. The reference point (or zero point) of the grid is located at the Marietta Square in the county seat of Marietta, Georgia. The base line between north and south part of the county is at Whitlock Avenue. The base line between the east and west part of the county is at Church Street. Directional base lines are extended to the county's boundaries thus creating four quadrants designed N.E., N.W., S.E., and S.W. Street numbers increase as one moves away from the base lines.

401.19.02 Street Numbering Procedures

All property address numbers are assigned by the Community Development Agency/Development & Inspections Division (OCGA Chap. 110, Sec. 110-85).

Typically, a property located on the ***right*** side of a street is given an ***even*** number as numbers increase. Conversely, a property located on the ***left*** side of the street is given an ***odd*** number as numbers increase. Numbers are always referenced from the address grid base lines. Generally, address numbers will increase sequentially as they move away from the zero point.

Street Naming and Selection Procedures

All street names are subject to the approval of the Community Development Agency/Development & Inspections (OCGA Chap. 110, Sec. 110-85) the following guidelines are used when assigning street names:

1. Proposed streets that are obviously in alignment with other existing, named streets shall bear the names of such existing streets. Once a name is assigned to any alignment, it may not change anywhere along the extension of that alignment.

2. A street name combination (primary name/type/suffix) may be used only once and may not be used in any other alignment.

3. Except within the same project, no proposed street name shall duplicate an existing street name within Cobb County regardless of the use of any type such as "street", "avenue", "boulevard", "drive", "place", "way", "court", or other designation.

4. All streets shall bear the proper quadrant suffix (i.e. N.E., N.W., S.E., S.W.).

5. Proposed new names shall be reviewed for correct usage and reasonable meanings consistent with the language used. Such review shall also include correct spelling.

6. Street names shall not include directional words such as north, south, east or west, or the words “old” or “new’.

7. A street name should be pleasant sounding, appropriate and easy to read so that the public and children, in particular, can communicate the name in an emergency situation.

8. Street names tending to be confused as homonyms (similar names spelled differently) are not acceptable.

9. Names derived from a foreign language are unacceptable.

10. Names that tend to be slurred, or have pronunciations that run together are unacceptable.

11. Street names with the same theme (i.e. flowers, states, etc.) are suggested for naming streets in an entire subdivision, as means of general identification, rather than duplicating the conventional name differentiated only by the street type (suffix).

Addressing For Commercial Properties

1. A current “Full Site” Land Disturbance Permit (LDP) for the parcel proposed for development must be issued by the Community Development Agency. This is required before a request for a street address will be processed. An approved copy of the site plans for the project must be presented at the time of application, or the 6-digit LDP number must be made available for reference.

2. ***A field check of the property may be necessary if a proper address cannot be established***. Property is typically identified by legal description (i.e. land district, land lot and parcel location). The site plans for a project are examined, the property is located on the tax map, and the correct address number range is established.

3. A street number conforming to sequential order established by the grid system is selected. If the number has not been duplicated anywhere in the county, an official property address is issued to the parcel.

Addressing For Residential Properties

For new residential subdivision, street names are determined during the preliminary plat review and approval process. Names are only approved if the street name, including street type (suffix) is unique within the county.

For a single family residential property located outside of a subdivision, the following process will apply:

1. A site plan based on a recent survey must be provided. The tract must be a legal "lot of record" as recorded by plat in the Office of the Clerk of Superior Court.

2. The site plan must be approved by the Community Development Agency/Zoning Division for applicable zoning requirements.

3. The driveway location for the property must be approved by the Department of Transportation/Operations Divisions for access onto a minor, major or arterial road.

4. Since this type of tract is not typically a candidate for a LDP and does not come through the formal plan review process, it must be reviewed individually on a case-by-case basis. Each property is unique and may be subject to further review and requirements (i.e. county or state stream buffers, floodplain areas, variance stipulations, septic or sewer approvals, etc.)

5. A field check of the property may be necessary to ensure that the new street address is in sequence. When appropriate number is determined, an official property address notice is issued.

401.20 MAJOR THOROUGHFARES

401.20.01 Process

Roadways, streets, or highways that are shown on the Cobb County Major Thoroughfare Plan to be classified as arterials, major collectors, or minor collectors shall conform to this section. Also, new roadways that the County determines to be classified as major thoroughfares shall conform to this section. All roadways proposed for industrial use shall conform to this section.

Because major thoroughfares carry a higher volume of traffic and a higher rate of speed than the lower classified roadways, the planning, design, and construction of these roadways must conform to higher standards.

New, modified, or improved major thoroughfares must be coordinated with the existing Major Thoroughfare Plan and all future planned roadways on file with the County, State, or City.

The design of the roadway shall be performed by an engineering firm pre-qualified with Cobb DOT or who shall become pre-qualified prior to performing the services

involved. Cobb DOT maintains a list of pre-qualified engineering firms for all the categories of roadway, bridge, environmental, surveying, traffic engineering, and geotechnical services involved with roadway projects.

Plans prepared for these roadways will not be eligible for the "One Stop" or the standard plan review process. The plan review process shall be as follows:

- Concept Plan & Traffic Study
- Preliminary Engineering
- Right-of-Way Plans
- Final Construction Plans (including pavement design)

Plans shall conform to chapters 18 through 23 of the Cobb DOT *Roadway Plans Preparation Manual,* latest revision, and the *AASHTO Policy on Geometric Design of Highways and Streets*, and the *Georgia Department of Transportation Standard Specifications for Construction of Roads and Bridges*, latest edition. The design shall utilize the Georgia DOT construction standards and details.

If the County is to fund, participate, or otherwise share the cost of any part of the construction of the roadway or related infrastructure, the design services must conform to Cobb's standard *Consultant Services Agreement*, latest revision.

If the County is to administer the construction contract (bid the project) the plans shall be prepared in accordance with all chapters of the Cobb DOT *Roadway Plans Preparation Manual,* latest edition.

401.20.02 Specifications

Specifications and design criteria stated herein are for planning purposes. Design exceptions will be considered on a case-by-case basis and it is the responsibility of the developer and his engineer to identify the exceptions in the concept and preliminary design stages. Exceptions/variances will be subject to approval by the Director of the Cobb Department of Transportation.

Right-of-Way

MINIMUM RIGHT-OF-WAY PER ROADWAY CLASSIFICATION

FUNCTIONAL CLASSIFICATION	RIGHT-OF-WAY, TOTAL WIDTH
Arterial – 5 lane	100'
Arterial – 4 lane divided	110'
Major Collector	80'
Minor Collector	60'

- Additional right-of-way width may be required to be dedicated at intersections or other locations where turning lanes, medians, traffic signal poles and controllers, or other improvements are required and the minimum right-of-way standard would be inadequate to accommodate the improvements.
- For existing roadways being improved or modified where the proposed centerline of the pavement to right-of-way is less than ½ the width shown herein, the additional width will be required for all property fronting the roadway.
- Right-of-way mitres are required at all intersections and are dependent on the size of the intersection curb radii.
- Permanent and temporary easements will be required and shall conform to the Cobb County Plans Preparation Manual.
- Deeding of right-of-way is covered in Dedication of Right-of-Way and Easements, Section 205.

Roadway/Lane Width

- Roadway widths, curb, and gutter dimensions are based on the Functional Classification of the Roadway. Lane widths for non-residential roads shall be (12) twelve feet unless otherwise approved by the Director.
- If any part of the roadway improvements is within the limits of the GA DOT jurisdiction, the lane widths shall comply with the State's requirements.
- For right-of-way and lane width requirements for multi-lane urban section streets, see Standard Details.

Intersection Design

- Angle of intersection
- Intersections for new roadways shall not be at an interior angle less than 85° unless the intersection is otherwise warranted and approved for a stop-and-go traffic signal in which case the minimum angle shall be 80°.
- Intersections of existing roadways shall be reviewed on a case-by-case basis using AASHTO, latest edition guidelines.
- Intersection radius
- Intersections radii for new roadways shall be as follows:

  35' for Minor Collectors
  40' for Major Collectors
  50' for Arterials

  Unless design vehicle type requires a larger radii.

- Larger radii will be required if channelized right turn lanes are proposed.
- Larger radii will be required if the intersecting angle of the roadways is less than 85°.

- Traffic Signals
- Intersections on thoroughfares with another roadway classified as a major thoroughfare shall require a traffic study utilizing Highway Capacity Software and the MUTCD, latest editions, signal warrants. Additional intersections may require a traffic study. See the Cobb County Consultant Services Agreement for additional traffic study requirements.

401.20.03 Maximum Grades and Superelevation

FUNCTIONAL CLASSIFICATION	SUPERELEVATION (emax)		MAX. GRADE
	URBAN	RURAL	
Arterial	.04	.06	8%
Major Collector	.04	.06	10%
Minor Collector	.04	.08	12%

401.20.04 Pavement Sections

(Per GA DOT Specifications)

FUNCTIONAL CLASSIFICATION	STONE BASE	ASPHALT BASE	BINDER	TOPPING E OR F
Arterial or Collectors	10” GAB	4” A.C.	2” B	1 ½”

* Additional structural pavement section may be required.

401.20.05 Bikeways

The Cobb County Bikeway Plan shall be reviewed by the developer and his engineer and incorporated into the concept stage of the plan preparation. If bikeways are to be provided, three to four feet of additional pavement width on both sides of the roadway will be required. Additional right-of-way may be required. Residential subdivisions shall be excluded.

401.20.06 Non-Motorized Accommodation

Cobb County encourages non-motorized accommodation (i.e., bicycle, pedestrians, etc.) design in accordance with routes designated on the adopted Cobb County Bicycle Plan.

402 ACCESS

402.01 GENERAL

Driveways provide access to property and are a service to the traveling public. However, vehicles entering or leaving driveways may disrupt the flow of traffic on streets and cause accidents, thereby infringing on the rights of the public to travel the roadway. All driveways should be restricted to locations where movements into and out of them can occur in a safe and orderly manner.

Because of their simple appearance, driveways often do not receive sufficient design consideration. At the least, driveways should always be designed to eliminate or minimize opposite lane encroachment while entering and exiting property.

All driveways are to be designed and constructed to provide turning radii for appropriate design vehicles sufficient to minimize adjacent lane encroachment. For commercial driveway requirements see Standard Detail 116.

All driveways are to be designed and constructed with sidewalk transitions as appropriate.

All driveways are to be considered low volume intersections and to comply with minimum Intersection/Corner Sight Distance requirements of these regulations.

402.02 ACCESS FROM THOROUGHFARE STREETS

In order to provide ease and convenience in ingress/egress to private property and the maximum safety with the least interference to the traffic flow on thoroughfares, there shall be the minimum number of access points to adequately serve the development. The number and location of driveways shall be regulated and limited when interparcel access is available and feasible given existing topographic conditions and cooperation of adjoining property owners.

When property frontage is less than 200 feet, one driveway shall be allowed for approval. Additional entrances/exits for property having street frontage in excess of 200 feet may be considered by Cobb DOT upon a showing that interparcel access, as encouraged in Section 402.03 of these standards is not feasible. Applicant must also demonstrate that such additional entrances/exits are needed and would not increase traffic congestion or otherwise reduce the safety and convenience of the traveling public.

To allow for proper corner clearance, the minimum tangent curb length between a driveway radius and an intersection shall be 100 feet.

If the closest intersection is or is likely to be signalized, traffic movements to and from any driveway within 250 feet of an intersection with (as measured from the point of tangency) a collector or an arterial shall be limited to right turns only.

402.03 ACCESS LIMITATIONS FOR DEVELOPMENT ADJACENT TO THOROUGHFARES

All access points and driveways adjacent to thoroughfares may be subject to further restriction and consideration as may be deemed necessary by the GA DOT and/or Cobb DOT to insure safe, functional design and efficient operation of the thoroughfares. Interparcel access easements between adjacent, non-residential properties that access county thoroughfares shall be encouraged. Controlling access and establishing interparcel access easements is desirable for providing safe and efficient movement of traffic, both vehicular and pedestrian, as well as encouraging efficient development plans that enable occupants and clients to fulfill their daily activities through minimal use of vehicles, and through increased use of alternative transportation modes such as public transit, walking and bicycling.

For non-residential developments, improvements to provide a separate left-turn lane shall be considered on a case-by-case basis. Non-residential developments that are adjacent to one another and contain existing or planned exterior property line grades/elevations that are not encumbered by permanent structures and do not differ by more than a manageable vertical separation and where connectivity is mutually agreed to by the connecting property owners, shall be encouraged to provide for and construct (within an agreed upon time frame) interparcel access drives as may be accomplished through a reservation of access, a recorded cross-access easement, establishment of a master condominium or any other legal instrument that would accomplish the same. In order to facilitate an agreement between the contiguous property owners, applicants may request administrative variances when the implementation of these interparcel access connections necessitates design changes in conflict with the zoning ordinance and other development codes and regulations. Administrative variance requests will be considered by the Director of Community Development or his/her designee in accordance with Section 134-35 except that the variance may equal up to 100 percent of the existing requirements. The use of administrative variances for the implementation of interparcel access drives shall not allow for an increased development density above that permitted by the underlying zoning. Any administrative variance for the implementation of interparcel access drives shall be reported to the district commissioner. Applicants (or affected adjacent property owners) may also request permission to erect offsite, directional signage to facilitate eliminating an existing access or establishing an interparcel access connection. Any offsite directional signage must be approved by the Cobb County Board of Commissioners via an agenda item.

A maximum number of 200 residential dwelling units shall be allowed one street outlet on an existing public street. If a second access to an existing public road is not available or, in the opinion of Cobb DOT, would encourage non-residential traffic to traverse the development, a single entrance may be allowed if designed with

sufficient right-of-way and improvements to provide a protected left-turn lane, subject to the approval of Cobb DOT,

Access to all residential lots shall be from interior subdivision streets or roads where possible. Exceptions are subject to approval from the Director of the Department of Transportation. Subdivisions of three or less lots may be exempted upon approval by the Director DOT or his/her designee with proper consideration of safety, hydrological, and environmental concerns.

No catch basins will be allowed within access/driveway radii (turning radii).

402.04 SERVICE DRIVES

Where a development borders on or contains a limited access roadway right-or-way, or arterial road right-of-way, GA DOT and/or Cobb DOT may require a service drive or suitable provisions for future service drives approximately parallel to and on each side of such right-of-way, at a distance suitable for the appropriate use of the intervening land. Distances involving rights-of-way shall also be determined with due regard for the requirements of approach grades and future grade separations.

All driveways along designated thoroughfares with existing or planned service roads shall access to such service roads. To gain temporary direct access to the thoroughfare, the developer shall construct the section of the service road adjacent to the development. The service road section shall be located where planned. Any right-of-way not previously dedicated shall be dedicated prior to consideration of a temporary driveway approval providing direct access to the thoroughfare.

402.05 MEDIAN OPENINGS

402.05.01 Location

Unless the Board of Commissioners or other jurisdictional authority has established a more restrictive policy, no median opening shall be spaced at a distance less than 660 feet from any other median opening (measured from nose to nose) unless specifically approved by Cobb DOT on a finding that, given the particular conditions of the proposed development, such determination will not compromise traffic operational and safety standards.

402.05.02 Design Criteria

All median openings shall include at least 200 feet storage with 100 transition unless otherwise acceptable to Cobb DOT based on a traffic study. Increased storage and transition lengths may be required to eliminate disruption of through-traffic flow.

402.06 BUILDING SETBACKS ADJACENT TO THOROUGHFARES

Any building constructed along a thoroughfare as defined by the Cobb County Major Thoroughfare Plan, and as amended from time to time, shall have a minimum setback

from the required right-of-way as required by the Zoning Ordinance, and as amended from time to time.

402.07 RESIDENTIAL DRIVEWAY STANDARDS

402.07.01 Residential Driveways

Residential driveways provide a primary means of access to single-family residential uses.

Along collector and arterial roadways, residential driveways are to be designed and constructed to the following standards. GA DOT Standard # 6050 may be substituted, if prior approval is made by the Cobb DOT.

- Width – Minimum 12', Maximum 24' on right-of-way
- Radii or flare – Minimum 15'
- Spacing from street intersection – Minimum 50'
- Angle of intersection with street/roadway – Approximately right angled 80° to 100°
- Corner/intersection sight distance – To comply with corner/intersection sight distance requirements of roadway intersected with the driveway as per these regulations.
- Landing grade – Compatible with shoulder grade
- Length – A minimum of 25' or to the edge of the County or State right-of-way, whichever is greater, shall be paved with a treated hardened surface.

*Rural residential driveways may be constructed with an asphalt pavement section, if approved by the Cobb County DOT.

402.07.02 Driveway Drainage Pipes

A residential driveway constructed at a location along a rural roadway has or should have a ditch along the roadside for the purpose of collecting, channeling, and controlling storm water runoff. In addition to the design and construction requirements, rural residential driveways shall be constructed with culverts to conduct storm water underneath the driveway and shall be:

- Concrete, corrugated metal pipe, or other type of culvert approved by Cobb County;
- Sized to accommodate the 10-year storm, as a minimum;
- Provided with flare-end sections at the inlet and outlet;
- Of sufficient length to accommodate a minimum of 2-foot shoulders at each end of the driveway with a maximum side slope of 2:1 to the bottom of the ditch line; and,
- Installed in a ditch of minimum 2-foot wide flat bottom with sides sloped at a grade no greater than 2:1 stabilized with acceptable vegetation.

402.08 NON-RESIDENTIAL DRIVEWAYS

Driveways servicing developments shall provide uninterrupted ingress/egress to and from the site. The minimum distance required is measured from the street right-of-way line at the ingress/egress to the outer edge of any interior service drive or parking space with direct access to such driveway as measured perpendicularly from the street. The length of the uninterrupted ingress/egress is determined by the maximum peak hour volume of the facility in which the driveway is provided and as shown in the table below. The developer shall provide this information.

MAXIMUM PEAK HOUR VOLUME	UNINTERRUPTED INGRESS/EGRESS
UP TO 50 VEHICLES	25’
50 TO 200 VEHICLES	50’
Vehicles 200 and Up	100’

Non-residential driveways shall not be designed or marked to allow more than one lane of traffic to exit onto a street simultaneously, unless such driveway is channelized in accordance with traffic engineering design principles as applicable when designing channelized street intersections.

As may be requested, left-turn driveway lanes shall be a minimum of 12 feet wide and provide a minimum 150 feet storage with 100 feet transition.

Non-Residential driveways are to be constructed to the following standards:

- Width – Minimum 24’ two way access
  *Maximum 32’ two way access
  Minimum 14’ one way access
  Maximum 18’ one way access
- Radii - Minimum 30’
  Maximum 50’
- Spacing from street intersection- Minimum one hundred (100’) feet tangent
- Composition – Shall meet or exceed the same specification as the connecting public roadway
- Drainage – Consistent with existing drainage plan of the connecting public roadway unless other improvements are required for safety, hydrological and environmental considerations
- Angle of intersection with roadway - Approximately right angled 80° to 100°

- Corner/intersection sight distance – To comply with corner/intersection sight distance requirements of roadway intersected with the driveway as per these regulations
- Landing grade - ±2% of intersecting roadway within the right-of-way

* Driveway designs other than as provided within these regulations, i.e., median divided or additional lanes, are subject to consideration of the GA DOT and/or Cobb DOT.

402.09 ACCELERATION/DECELERATION LANES/ROADWAY IMPROVEMENTS ALONG EXISTING STREETS

Cobb County may require a deceleration and/or acceleration lane for all developments. Requirements for constructing the lane(s), that will be evaluated by Cobb DOT, include (but are not limited to) sight distance, posted speed limit, classification of the existing street, volumes on the existing street, volumes to be generated by the development, vertical curvature, horizontal curvature, length of property road frontage, hydrological, and environmental concerns. During the evaluation of the development's entrance, additional improvements, such as tapers, left turn lanes, by pass lanes, median modification, or other facilities, may be required to enhance safety and operations. The developer should contact Cobb DOT at the earliest possible time to request the evaluation so that the appropriate construction plans are prepared and submitted through the plan review process.

402.10 LEFT TURN LANE DESIGN GUIDELINES

Cobb County may require a left turn lane for residential and commercial developments on two-lane thoroughfare roads. These roads are reflected in the County's Major Thoroughfare Plan, latest revised edition. Requirements for constructing the lanes will be based on roadway classification, posted speed limit of the thoroughfare road, and the size of the development.

The design guidelines are generally as follows:

	Development size	Minimum lane design
35 mph Speed Limit	30 to 45 lots	75 ft.storage w/50 ft bay taper*
	50 to 75 lots	100 ft storage w/50 ft bay taper*
	Over 75 lots	150 ft storage w/50 ft bay taper*
45 mph Speed Limit	30 to 45 lots	75 ft.storage w/100 ft bay taper*
	50 to 75 lots	100 ft storage w/100 ft bay taper*
	Over 75 lots	150 ft storage w/100 ft bay taper*

This design does not include the lane transitional taper that may be required.

Commercial developments of 10,000 s.f. or greater will be reviewed on a case-by-case basis for left turn lane requirements.

*The taper length can be incorporated into the required length of the transitional taper as defined in the AASHTO Green Book or the Manual on Uniform Traffic Control Devices (MUTCD). Thoroughfare roads having a 30 mph speed limit will be considered on a site specific basis.

Design considerations may be given for significant and unique topography and utility conflicts. Other considerations may be granted on a case-by-case basis.

403 OFF-STREET PARKING FACILITIES

403.01 GENERAL DESIGN REQUIREMENTS

403.01.01 Street Access

Each building shall be located on a lot or parcel, which abuts a public street for at least 50 feet. Access to a public street by means of a recorded access easement may be permitted if approved by the Board of Zoning Appeals or Board of Commissioners.

403.01.02 Street Access – Curb Cuts in Other than "R" Districts

Curb cuts for service drives, entrances, exits, and other similar facilities on public streets in other than "R" Districts shall not be located within one hundred (100') feet of any intersection or within 40 feet of another curb cut. A curb cut shall be no greater than 40 feet in width and no closer than 20 feet to any property line. (Ordinance of February 7, 1979, § 2)

403.01.03 State Highway Department Approval

All entrances or exits of any street or drive, public or private, from or to any State highway shall be approved by the State Highway Department prior to the construction of such street or drive, or the issuance of any development permit for any improvement to be served by such street or drive, but permit approval shall not be held longer than 30 days.

403.01.04 Corner Visibility Clearance

In any district no fence, structure sign, planting, or other obstruction (above a height of three feet) shall be maintained within 15 feet of the intersection of the right-of-way lines extended of two streets or of a street intersection with a railroad right-of-way.

403.01.05 Off-Street Automobile Parking

Off-street automobile parking shall be provided in accordance with all applicable provisions of this section.

403.01.06 Design Standards

All parking facilities, including entrances, exits, and maneuvering areas shall comply with the following provisions:

- Shall have access to a public street
- Shall be graded and paved, including access drive(s), and be curbed when needed for effective drainage control
- Shall have all spaces marked with paint lines, curbstones, or other similar designations
- Each space set at a 90° angle shall have not less than 162 square feet and shall not be less than 9 feet wide and 19 feet deep, exclusive of passageways, which shall be not less than 22 feet wide
- Each space set at a 60° angle shall have not less than 176 square feet and shall be not less than 8 feet 6 inches wide and 20 feet 8 inches deep, exclusive of passageways, which shall be not less than 18 feet 6 inches wide; Each space set at a 45° angle shall have not less than 165 square feet and shall be not less than 8 feet 6 inches wide and 19 feet 5 inches deep, exclusive of passageways, which shall be not less than 13 feet 6 inches wide
- There shall be adequate interior drives to connect each space with a public street. Interior driveways with no parking shall not be less than 10 feet wide for one-way traffic and not less than 20 feet wide for two-way traffic.
- Shall be drained to prevent damage to abutting properties or public streets
- Adequate lighting shall be provided if the facilities are to be used at night. Such lighting shall be arranged and installed not to reflect or cause glare on abutting properties or roadways and shall be subject to the lighting requirements in § 3-28-16.3
- Any parking areas within the required front yard of any RM or office district shall not be closer than ten feet to any public right-of-way
- No parking or loading area shall be established in the required front yard of any "R" District except for a single-family residential use; no more than 35% of the required front yard may be used for parking and total impervious surface in such case
- Twenty percent (20%) of the total spaces may be designated as compact spaces. A compact space shall have not less than 128 square feet and shall not be less than 8 feet wide and 16 feet deep, exclusive of passageways which shall not be less than 22 feet wide. Each compact space shall be clearly marked.

The provisions above shall not apply to single-family residential uses where three or less spaces are required, except that it shall have access to a public street.

403.01.07 Location

All parking facilities shall be located in accordance with the following provisions:

- The required space shall be provided on the same plot with the use it serves, except as provided herein
- If vehicular parking or storage space required cannot be reasonably provided on the same lot on which the principal use is conducted, the Board of Zoning Appeals may permit such space to be provided on other off-street property

provided such space lies within 400 feet of the main entrance to such principal use. Such vehicular parking space shall be associated with the permitted use and shall not hereafter be reduced or encroached upon in any manner

- The required parking space for any number of separate uses may be combined in one lot, but the required space assigned to one use may not be assigned to another use at the same time, except that one-half of the parking space required for churches, theaters, or assembly halls whose peak attendance will be at night or on Sunday may be assigned to a use which will be closed at nights or on Sundays.

403.01.08 Location and Surface of Parking Areas

The parking of any vehicle on any lot in any district on other than a surface treated and hardened to accommodate such vehicle is prohibited except as provided herein. In addition, parking of vehicles in the front yard or in front of the principal building line in an "R" District shall be prohibited except on a hard-surfaced driveway or in a carport or garage.

403.01.09 Required Spaces

The number of parking spaces or area required for a particular use can be located in the Cobb County Code, 134-272, as may be amended from time to time.

403.02 FUNCTIONAL ELEMENTS OF ON-SITE CIRCULATION SYSTEM

An on-site circulation plan shall be prepared to provide uninterrupted ingress/egress in accordance with section 402.08

404 SIDEWALKS AND PATHWAYS

Cobb County is actively pursuing the continuation of an integrated and multi-modal transportation system that promotes compliance with the federal Clean Air Act by emphasizing the need to create increased pedestrian travel opportunities by expanding the sidewalk network and developing a pathway program. Whenever possible, developers will be encouraged to construct sidewalk along the right-of-way abutting their developments. The pathway program takes pedestrian access one step further by providing safe, convenient access to activity centers such as schools, park, and shopping centers in an effort to encourage pedestrian and non-motorized vehicular travel. The county will support and encourage a viable network of off-street travel routes that can reduce the need for and volume of vehicular traffic throughout the county.

GENERAL SIDEWALK REQUIREMENTS

When a subdivision project abuts a public right-of-way, sidewalks shall be required for a length equal to the distance of the required road improvements along the road frontage. Sidewalks will be required to be constructed on both sides of the road (if development abuts both sides of the road) when the road is classified as an arterial, major collector, or minor collector roadway by the Thoroughfare Plan. Sidewalks shall

be constructed on all remaining streets that qualify for such requirements under the Sidewalk Ordinance. Sidewalk location and orientation may be altered under site-specific conditions at the discretion of the Director of the Department of Transportation.

Amenity areas must be accessible by sidewalks from the nearest sidewalk in the subdivision. All sidewalks must be installed prior to the acceptance of the subdivision by Cobb County unless a performance security or letter of intent is in place at the time of acceptance.

Sidewalks will not be required in subdivisions zoned to an R-80 classification or approved for a rural road classification and will be considered exempt.

Sidewalks will be constructed to the specification as shown on Standard Detail #113 and located a minimum of three feet back of the curb. Sidewalk location can be varied at the discretion of the Director of the Department of Transportation with prior approval.

Sidewalks shall have a minimum width of four (4) feet for interior residential streets, five (5) feet for exterior and non-residential or as required by ADA or the Georgia Accessibility Code.

The concrete shall have a compressive strength of 3,000 pounds per square inch at 28 days and a minimum depth of four inches.

Builders are required to install sidewalk per Cobb County Sidewalk Plan prior to issuance of a Certificate of Occupancy.

405 ACCESSIBILITY REQUIREMENTS

Georgia law relating to the access to and use of facilities by persons with disabilities is set forth at O.C.G.A. Sec. 30-3-1, et. Seq. The law "is intended to eliminate, insofar as possible, unnecessary physical barriers encountered by individuals with disabilities or other individuals, and whose use of government buildings and facilities by the public is restricted."

Local governing authorities, including Cobb County, are responsible for the administration and enforcement of the Code with regard to all government and public buildings and facilities which are not under the jurisdiction of the Safety Fire Commissioner or Board of Regents. O.C.G.A.
Sec. 30-3-7.

I. ADOPTION & INCORPORATION BY REFERENCE OF STATE STATUTES.

A. State Statute (O.C.G.A. Sec. 30-3-1, et seq.)

The Georgia Accessibility Code, O.C.G.A. Sec. 30-3-1, et seq., is adopted and included, in its entirety, by reference, and made part of Section 405 of the Cobb County Development Standards and Specifications. A brief overview is included for ease of access. Copies of the Georgia law may be found in O.C.G.A.

B. Safety Fire Commissioner Rules & Regulations

The Rules & Regulations of the Georgia Safety Fire Commissioner, authorized pursuant to O.C.G.A. Sec. 30-3-7 (h) as may be amended from time to time, are also adopted and included in their entirety, by reference, and made part of Section 405 of the Cobb County Development Standards and Specifications. A overview is included for ease of access.

II. SUMMARY OF STATUTORY REQUIREMENTS

A. State Statutes : O.C.G.A. Sec. 30-3-1, et. Seq.

1. Building Permit Requirements: Architect's Seal

Pursuant to the Georgia Accessibility Statute, no building permit for buildings or facilities to be approved by the local governing authority may be approved unless the plans and specifications conform to the requirements of O.C.G.A. Secs. 30-3-3 and 30-3-5 and unless the architect or engineer responsible for preparation of the plans and specifications affixes that person's seal to such plans. The affixing of the seal of the architect to the plans constitutes a certification that to the best of that person's knowledge, information, and belief, they have been prepared in conformity with Sections 30-3-3 and 30-3-5. (See OCGA Sec. 30-3-7 (c)).

2. Standards and Specifications

The standards and specifications for compliance as set forth in OCGA 30-3-3 and 30-3-5 are as follows:

a. OCGA Sec. 30-3-3

This section provides that permits for construction or renovation of government buildings, public buildings and other facilities after July 1, 1995 may be approved only if the plans and specifications, at a minimum, comply with ADAAG standards (or more restrictive rules and regulations adopted by the Georgia Safety Fire Commissioner). The section further specifies standards and specifications for buildings permitted prior to July 1, 1995.

b. OCGA Section 30-3-5. Specific amenities required to be provided.

This section identifies specific amenities required to be provided to make buildings and facilities accessible to and usable by individuals with disabilities, including requirements for accessible parking spaces; accessible entrances; accessible toilet rooms, bathrooms, bathing

facilities and shower rooms; and accessible seating, tables, and work surfaces in a reasonable number.

B. Safety Fire Commissioner Rules and Regulations

Copies of the Safety Fire Commissioner's Rules and Regulations, Chapter 120-3-20, may be obtained from the State Safety Fire Commissioner's Office. A copy is on file in the Community Development Agency Office, and in the County ADA Coordinator's Office. A table of contents of Chapter 120-3-20 is included below to demonstrate the scope of these rules and regulations:

120-3-20-.01	PURPOSE
120-3-20-.02	ADMINISTRATION
120-3-20-.03	APPLICATION
120-3-20-.04	GENERAL
	1 Provisions for Adults
	2 Equivalent Facilitation
	3 Designing for Children
120-3-20-.05	MISCELLANEOUS INSTRUCTIONS
120-3-20-.06	DEFINITIONS
120-3-20-.07	Accessible Sites and Exterior Facilities: New Construction
120-3-20-.08	Accessible Buildings: New Construction
120-3-20-.09	(Reserved)
120-3-20-.10	Protruding Objects
120-3-20-.11	Ground and Floor Surfaces
120-3-20-.12	Parking and Passenger Loading Zones
120-3-20-.13	Curb Ramps
120-3-20-.14	Ramps
120-3-20-.15	Stairs
120-3-20-.16	Elevators
120-3-20-.17	Platform Lifts (Wheelchair Lifts)
120-3-20-.18	Windows
120-3-20-.19	Doors
120-3-20-.20	Entrances
120-3-20-.21	Drinking Fountains and Water Coolers
120-3-20-.22	Water Closets
120-3-20-.23	Toilet Stalls
120-3-20-.24	Urinals
120-3-20-.25	Lavatories and Mirrors
120-3-20-.26	Bathtubs

120-3-20-.27	Shower Stalls
120-3-20-.28	Toilet Rooms
120-3-20-.29	Bathrooms, Bathing Facilities and Shower Rooms
120-3-20-.30	Sinks
120-3-20-.31	Storage
120-3-20-.32	Handrails, Grab Bars, and Tub and Shower Seats
120-3-20-.33	Controls and Operating Mechanisms
120-3-20-.34	Alarms
120-3-20-.35	Detectable Warnings
120-3-20-.36	Signage
120-3-20-.37	Telephones
120-3-20-.38	Fixed or Built-in Seating and Tables
120-3-20-.39	Assembly Areas
120-3-20-.40	Automated Teller Machines
120-3-20-.41	Dressing and Fitting Rooms
120-3-20-.42	Restaurants And Cafeterias
120-3-20-.43	Medical Care Facilities
120-3-20-.44	Business And Mercantile
120-3-20-.45	Libraries
120-3-20-.46	Accessible Transient Lodging
120-3-20-.47	Transportation Facilities
120-3-20-.48	Designing For Children
120-3-20-.49	Covered Multi-Family Dwelling Units

406 BUS SHELTERS

Cobb County has adopted Cobb Community Transit Accessibility Guidelines and Performance Specifications for Bus Pads and Shelters. This standard, and as may be amended from time to time, is adopted for purposes of privately and publicly constructed bus pads and shelters constructed within Cobb County. A copy may be obtained through the Department of Transportation.

407 STANDARDS FOR LIGHTING

The following technical requirements shall be followed for all lighting fixtures to be installed and operated within Cobb County.

- All lighting shall be installed in accordance with the professional standards established by the Illuminating Engineering Society of North America (IESNA) as dictated in the County's Street Light Ordinance. A copy of the IESNA's publication entitled RP-8 American National Standard Practice for Roadway Lighting shall be used as a reference when determining appropriate fixture

spacing, wattages, patterns, and configurations. Specific illumination level requirements to be followed are outlined in the Street Light Ordinance and are based on IES recommendations.

- In order to contain the operational and maintenance costs for the provision of street lights, the following requirements have been established.
  - All fixtures shall use a High Pressure Sodium (HPS) lamp or a more energy efficient lamp source such as a Light-Emitting Diode (LED) which may become available. Metal Halide, Low Pressure Sodium, Mercury Vapor and any other lamp source which is less energy and cost efficient than HPS shall not be used to illuminate County roadways.
  - All developers building residential streets shall have the option of installing wood poles with a roadway fixture, fiberglass poles with a roadway fixture, or concrete poles with a pendant fixture.
  - All developers building commercial streets shall be subject to the above-standards established for residential uses but shall also have the option of utilizing a shoe-box style fixture.
  - All street light fixtures shall have a minimum mounting height of 25 feet and utilize an arm of sufficient length to illuminate the roadway as dictated in the County's Street Light Ordinance. Post top-style lights are not allowed.

Contact CDOT Street Light Administrator for questions at 770.528.1691.

408 EASEMENTS

408.01 UTILITY EASEMENTS

See Standard Detail Nos. 80 and 81.

In any utility location which otherwise affects the setbacks, the Zoning Division Manager may administratively vary the required setback in accordance with Section 103.01 herein.

408.02 WATER AND SANITARY SEWER EASEMENTS

408.02.01 General Requirements

Provisions of all easements needed for a project are the responsibility of the developer. Easements not on the property being developed (off-site easements) should be reviewed by the Water System prior to execution by the underlying property owner. The easement instrument should be drawn between the underlying property owner and the applicant, and should provide for transfer of the permanent easement from the applicant to Cobb county only upon acceptance of the installation by Cobb County. The easement instrument should make it clear that Cobb County is not responsible for completion of any work elements included as conditions to the easement (stipulations or otherwise). The Water System must

approve the easement before it is recorded. Once the easement is approved, the developer is responsible for recording the easement and submitting the original of the recorded document to the Water System.

408.02.02 Sanitary Sewer

All easements shall allow adequate area to construct and maintain the sewer and appurtenances.

Permanent easements shall be:

- a minimum of 20 feet wide
- 10 feet on each side of the line

Construction easements shall be:

- minimum of 40 feet wide
- 20 feet on each side of the line

Easements shall be provided for any sewer line needed to serve adjacent property, even if the sewer pipe is not installed.

Cobb County Code prohibits any structure from being built within ten feet of a permanent sanitary sewer easement on front and rear setbacks or within two feet on side setbacks. A waiver of setback requirements can be obtained on a case by case basis from the Engineering Division of the Cobb County Water System.

Drawings must show:

- property lines
- name of the property owners with the length of line encroaching on each property owner
- size of line
- line designation
- manhole numbers and stations
- width of permanent and construction easement
- scale of drawing
- north arrow
- land lot and district numbers
- tie to the nearest land lot corner

408.02.03 Water Line

All easements shall allow adequate area to construct and maintain the water line and appurtenances.

Permanent easements shall be:

- minimum of ten feet wide
- five feet on each side of the line

Construction easements shall be:

- minimum of 20 feet wide
- 10 feet on each side of the line

Easements shall be provided for any water line needed to serve adjacent property, even if the water line is not installed.

Cobb County Code prohibits any structure from being built within ten feet of a permanent water easement on front and rear setbacks or within two feet on side setbacks. A waiver of setback requirements can be obtained on a case-by-case basis from the Engineering Division of the Cobb County Water System.

Construction drawings must show:

- property lines
- name of the property owners with the length of line encroaching on each property owner
- size of line
- line designation
- width of permanent and construction easement
- scale of drawing
- north arrow
- land lot and district numbers
- tie to the nearest land lot corner

408.02.04 Quit Claims

In the event that Cobb County holds a valid easement (either utilized or not utilized) that might interfere with development of a project, Cobb County is willing to consider abandoning its rights with regard to the easement if the easement is currently unused and not reasonably expected to be used, or if the piping in the easement is satisfactorily relocated and easements for the new alignment provided.

Quit claims must be approved by the Board of Commissioners. If needed, the quit claim process should be initiated as early as possible in a project as several months are normally required to complete the required research, review, and execution.

408.03 DRAINAGE EASEMENTS

408.03.01 Storm Drainage

All permanent easements shall be:

- a minimum of ten feet for piped easements
- a minimum of 20 feet wide for open channel
- defined as ten feet on each side of the centerline of drainage course; and

- wide enough to allow for full depth excavation of pipe within the sideslope limitations of the Trench Ordinance. Nominally, this requires the drainage easement to be four times the depth of the pipe. As an alternative for consideration, engineers can submit concrete pipe designs.

408.03.02 Combined Easement for Sanitary and Pipe Storm Drainage

Combined easement for both sanitary sewer and piped storm drainage shall be:

- Minimum width of 30 feet
- If the storm drainage system consists of an open channel and a sanitary sewer easement:
- Minimum construction easement width shall be 40 feet
- Cobb County Code prohibits any structure being built within ten feet of a permanent sewer easement on front and rear setbacks or within two feet on side setbacks. A waiver of setback requirements can be obtained on a case-by-case basis from the Engineering Division of the Cobb County Water System.
- Actual easement shall provide for fully excavated trench with 2:1 side slopes to IE (Invert Elevation) of pipe. Engineers can submit concrete pipe and alternate designs.

A drainage swale shall provide for collection of stormwater to an easement.

409 STORM DRAINAGE SYSTEMS

409.01 GENERAL REQUIREMENTS

409.01.01 Applicability and Exemptions

All developments in unincorporated Cobb County, and in those other jurisdictions which by special agreement with Cobb County apply Cobb County Standards, shall comply with these standards.

409.01.02 Applications/Permit Process

All drawings and calculations must be sealed/signed by the design professional registered to practice in the State of Georgia. Submittal shall be made to the Site Plan Review Division of the Community Development Department either independently or as a part of an overall project. Once demonstration has been made of a workable system, Site Plan Review shall not unreasonably withhold a Land Disturbance Permit for the work to be done.

409.01.03 Inspection

Cobb County may periodically inspect the work in progress and completed for compliance with Cobb County minimum standards and the approved drawings.

409.02 DESIGN CRITERIA

409.02.01 Storm Drainage System Design

Standards to be used in designing system (For additional discussion about the requirements for Storm Drainage System Design, please refer to sections 107.03 and 107.04):

Sizing and location of all drainage structures shall be the responsibility of a registered design professional subject to approval by Stormwater Management Division.

Storm drainage pipes shall be sloped to maintain a minimum flow velocity of three fps so sediment will not collect. Exit velocities of eight fps or greater from outlet headwalls will require energy dissipation devices beyond the normal six times diameter length of rip-rap. Unimproved ditch velocities shall be maintained below five fps velocity.

Storm drainage pipes shall be sloped at a minimum of 1%. Maximum slope for storm drainage pipes is 10%. Storm drainage pipes located on grades steeper than 10% shall outfall into a drop structure with a least one section of outlet pipe sloped no greater than 2% (drop structures must be properly anchored down). Pipe slopes in excess of 10% must be approved by the Stormwater Management Division Director.

Department of Transportation, State of Georgia Current Roadway and Bridge Standard Plan 1030D, shall be used in determining class (RCP) or gauge (CMP) of pipe under fill and method of back-filling, subject to the stipulations contained herein.

Minimum design allowance for inlet cloggage is 15%.

Use “L”-back curbing only. Roll-back curbing is not permitted.

Manning’s roughness coefficient (“n”-value) for pavement inlet-design is 0.016.

The Rational Method shall use the 25-year storm or rain event as the minimum design frequency. Stormwater handled in this manner shall be water internal to the specific subdivision only.

***Note: The Flood Damage Prevention Ordinance designates each headwater pool created during a 100-year storm as a 100-year floodplain equal to the 100-year floodplain as established and designated by FEMA.

All subdivision drainage systems, both piped and channelized, receiving stormwater from off-site (outside the bounds of the subdivision specific) shall be designed to

handle and transport through the subdivision the 100-year storm. This design must address all necessary adjustments to channels, pipe sizes, lots, and any infrastructure of the subdivision specific.

Catch basins and/or drop inlets shall be designed by the developer's engineer to the Department of Transportation, State of Georgia Current Roadway & Bridge Standard Plans 1033D, 1034D, 1019 and subject to final approval by the Cobb County Community Development Agency.

Grated inlets in unpaved areas are not recommended. Raised lid area drains are preferred in unpaved areas.

Curb inlet catch basins shall be designed to handle a ten (10) year storm considering bypass, utilizing FHWA's Hydraulic Engineering Circular 12 (HEC-12) as prescribed in the GDOT Manual on Drainage Design for Highways. Maximum allowable gutter spread shall be 8-feet or ½ the travel lane width, whichever is less. Additional capacity at sag points (up to double) may be required on a case-by-case basis where the potential for structural flooding exists.

Maximum inlet spacing shall not exceed the following:

500 feet on grades up to 7%.

400 feet on grades from 7% to 10%.

250 feet on grades over 10%.

...unless supported by design calculations approved by the Cobb County Stormwater Management Division.

Demonstration shall be made that the 100-year storm event runoff will track through the development along the drainage routes assigned by the site specific hydrology study.

A certification of the pipe specifications for each pipe shall be required before installation.

Stormdrain pipes

A minimum size of 18-inch diameter pipe is required under public streets and within County dedicated drainage easements.

Except in residential subdivision streets, no corrugated metal pipe (CMP) shall be permitted under the traveling surface of paved roads, as defined herein to mean from curb to curb.

Minimum BCCMP gauge of 12 gauge. Minimum gauge thickness for aluminum pipe is 12 gauge.

Minimum gauge thickness for aluminum pipe is 12 gauge.

Minimum gauge thickness for Type 2 aluminized corrugated metal pipe is 14 gauge.

No CMP is permitted on a live stream. For the purpose of this requirement live streams are defined as any continuously flowing stream, which intercepts more than a ¼ square mile (160 acres) drainage area.

High-density polyethylene pipe (HDPE) pipe will be permitted under the following conditions:

1) Must have granular backfill to the top of the pipe
2) Depths no greater than ten (10') feet as measured to the invent of the pipe
3) Installation must be outside of roadway right-of-way
4) Watertight bell and spigot gasketed joints must be provided
5) 36" inch diameter or greater must be inspected and certified by a geotechnical engineer or a manufacturer's representative
6) Smoothbore pipe only

Concrete or masonry headwalls of an approved type are required on inlet and outlet ends of the pipe. Steel flared end sections are not approved. Only concrete flared end sections will be accepted. Standard step bevel and treatment may be approved on large diameter (60-inch or larger) storm drains where the perimeter is secured with grouted rip-rap or poured in place concrete.

No CMP will be permitted if depth as measured to the invert of the pipe is greater than 15 unless the individual exceptional instance is specifically approved in writing by the Stormwater Management Division Manager.

Extend 50' beyond the front building setback line if 30" or smaller.

Maximum continuous length of pipe without a point of access (i.e., manhole or junction box) shall be 300' for pipes 48" and smaller.

Junction boxes having a manhole-type frame and cover access at grade to the pipe shall be constructed at all changes in horizontal or vertical alignment to meet the requirement of Department of Transportation, State of Georgia Standard 1030D (or most current).

The 100-year headwater pool shall be determined at each proposed and/or modified cross-drainage structure.

In accordance with Cobb County's Flood Damage Prevention Ordinance, finished floor level (including basement floor level) shall be set no lower than the 100-year frequency headwater pool elevation plus three vertical feet.

Emergency flow-bypass or emergency overflow relief shall be provided at the elevation of the 100-year headwater pool to convey flow through (or over) the impoundment structure in instances where the cross drainage structure intercepts a live stream, as defined above.

Lowest finished floor level, including basement of any new home or commercial building must be set at least 3 feet above the effective base flood elevation, or 1 foot above the future conditions 100-year flood level; or 1 foot above the highest downstream road grad crossing, whichever is higher.

409.02.02 Record Drawing

Record drawings of Storm Drain systems installed in new developments must be submitted prior to approval of the Final Plat. These record drawings must comply with section 206.01.02. In addition, Stormwater Management Division of the Water System shall be provided X, Y, Z locations, based upon state plane coordinates, of all storm structures and sizes of pipe on a spreadsheet template as developed and provided by Stormwater Management.

409.03 STORM WATER MANAGEMENT (DETENTION)

Each project shall provide stormwater controls such that predevelopment peak flow rates are maintained, unless otherwise approved by Division Manager of Stormwater Management or his/her designee.

Storms with a statistical rate of return of 2, 5, 10, 25, 50, and 100 years shall be evaluated and controls created to attenuate peak flows.

Responsibility for calibration and application of the empirical equations rests with the design engineer.

Times of concentrations of less than ten minutes for existing/undeveloped conditions are not acceptable for design nor are runoff percentages CN's higher than 55 for on-site area, without supporting documentation acceptable to the Cobb County Stormwater Management Division.

Hydrologic calculations must employ an engineering methodology currently recognized and accepted within the industry. This methodology must include a hydrograph routing analysis, which generates an inflow hydrography to the detention pond to create an outflow hydrography. Multiple inflow hydrographs shall be combined on a real time basis. Multiple outflow hydrographs shall be combined on a real time basis. Multiple detention ponds in series must be routed from one to the next and so on throughout.

A hydrograph routing analysis shall be submitted for all proposed areas drainage structures, which intercept more than 320 acres (½ square mile).

Where existing developed sites are changed, only those portions of the site, which are unchanged with respect to impervious coverage, are “grandfathered” as existing conditions for allowable runoff calculations. That is, impervious areas will be grandfathered as “existing conditions” for allowable runoff calculations. In cases where over 10,000 square feet of impervious cover are replaced, changed, modified or improved (does not apply to pavement resurfacing), the provisions of Section 4 of the Metropolitan North Georgia Water Planning District’s Post Development Model Ordinance, as revised on December 7, 2006, will apply.

409.03.01 Stormwater Hydrologic Methodology

The design professional engineer may utilize any industry-accepted methodology for creating hydrologic design which routes a hydrographic model of the storm through the detention pond and outlet control structure and generates a related hydrographic model for output. All storms from 2-year to the 100-year event shall be analyzed and controlled such that corresponding peak flows leaving the site are not increased.

In order to expedite Cobb County's review, the hydrology study for the project must include the listing of input parameters:

- Drainage areas in acres
- Time of concentration/lag time
- Amount or percentage of impervious area within the drainage area both before and after the project
- Length in feet of all drainage system improvements along the route
- Soil Conservation Services (SCS) curve numbers estimates for before and after project conditions.

Analysis of stream flow and backwater elevations shall be consistent with FEMA's accepted methodologies whether or not the project is within a Federal Emergency Management Agency (FEMA) Flood Zone. The U.S. Army Corps of Engineers' standard step HEC II analysis, HEC RAS or approved equal shall be utilized. Routing of flood waters through an impoundment using a hydrographic model (to justify attenuated peak flows, for example) may be allowed, subject to Cobb County Stormwater Division's concurrence

409.03.02 Stormwater Quality/Quantity Control Facilities

Cobb County requires each new project to create adequate stormwater controls using Best Management Practices (BMP’s). Use of BMP’s to enhance water quality and to comply with the Clean Water Act (CWA) is federally mandated. Cobb County will utilize the Atlanta Regional Commission’s Georgia Stormwater Management

Manual, Volumes I and II, as standards for compliance with the required BMP's. For any project that requires a land disturbance permit the project shall conform to the following standards:

Water quality BMP's AS RECOMMENDED IN THE Atlanta Regional Commissioner's Georgia Stormwater Management Manuel, Volumes I and II. For any project that requires a land disturbance permit the project shall conform to the following standards:

- The total directly connected impervious surface area within its development, including all public and private structures, roadways, utilities, and other facilities shall not exceed 25% of the total area within the development.
- Impervious surfaces can be considered disconnected from the drainage system if the runoff from the impervious surface flows over a minimum of 25 feet of pervious surfaces (non-concentrated flow) or if the runoff from 1.2" of rainfall is treated by one of the following water quality best management practices as approved by the Stormwater Management Division Manager:
  - Wet Ponds (extended detention for less that 20 acres) — ED-micro pool.
  - Wetland—constructed
  - Dry swales
  - Sand Filter
  - Bio-retention
  - Vegetated Filtration Systems
  - Dedicated recorded greenspace conservation areas
  - Donated (Fee Simple) floodplain land and/or stream buffers
  - Any other best management practice approved by the Stormwater Management Division Manager.

- Residential detention facility and/or dam and outlet control structure shall be located outside the boundaries of a permitted building lot. Setbacks and density calculations for permitted building lots, which abut a residential detention facility, shall not be adversely affected by the boundaries of the residential detention facility. A detention pond shall be defined as any dam or roadway embankment with a control structure on the upstream side (Does not apply to roadway detention areas). Headwater pools created by restrictive culverts are not considered as detention facilities for the purposes of this section.
- Access shall be provided via a graded and grassed roadway not less than 20 feet wide and minimum grade practical. Said access must conncect the detention pond lot to a public right of way. In the event that the detention pond is not accessible via county-owned property to a public right of way, Cobb County will not accept for maintenance; the pond/facility will be privately owned and maintained. Privately maintained ponds within residential projects must be so noted on final plats, including deed covenants and must provide and access easement.
- Access to the facility and/or dam and outlet energy dissipater from the public roadway shall occur on county-owned land and shall not occur on any permitted

building lot. Access must be used exclusively for access to detention facility even though other utility easements may cross it.

- Permanent drainage easements of 12 feet in width shall be recorded around all detention ponds at or above the 100-year pool elevation.
- Detention facilities will not be allowed within any FEMA "A"-numbered or "AE" designated flood zone or Cobb County Flood Damage Prevention Ordinance flood hazard area without obtaining prior written permit approval from the Cobb County Water System Stormwater Management Division.
- Roadway Detention will be allowed on the upstream side of a subdivision street or public road subject to Corp. of Engineer/Ga. Environmental Protection Division approval and, providing that the outlet control structure is located outside of the right-of-way and the roadway shoulder is not impacted. Area must be undisturbed, no grading will be allowed, and must be accessible from the public r.o.w. and identified on the final plat with a permanent access and maintenance easement surrounding the headwater pool.
- Publicly owned and maintained roadways are not permitted across permanent impoundment structures which have a permanent pool (water) level.
- Dams may be created across streams provided all appropriate required state and federal permits are obtained an all properties affected, including backwaters inundation by a flood pool, are under the control or joint control of the developer of said dam. Backwater elevations upstream and off-site cannot be increased without obtaining flood easements from the affected property owners. In addition, FEMA permitting is required for any dam crossing a regulated floodplain.
- Existing lakes and ponds provide a mitigating influence on stormwater flow by attenuating flood peaks. For this reason, Cobb County may require that each property owner maintain the lake or pond now existing on his/her property. Prior written permission from the Cobb County Stormwater Division is required to remove said lake or pond and the flood attenuating benefits that they provide. Cobb County will require a pre and post development sediment range survey for any existing lake or pond within the drainage basin that is downstream of a proposed project.
- Each residential detention facility, which is normally dry, and is in excess of six vertical feet as measured from the crest of the dam to the invert of the pond, shall be fenced using chain link fencing (or approved alternate) complying in material and installation with Section 643 of the Standard Specifications for Road and Bridge Construction, Department of Transportation, State of Georgia, current edition, except as follows:
  - Height shall be 6 feet.
  - Access gate shall have clear opening width of 12 feet, made of two panels, which shall be centered upon the access road.
  - Any chain link fencing around detention facilities required by these standards which is located within 300 feet of any public roadway classified other than a local residential street within the proposed project, must be vinyl coated.
  - Fencing shall be mounted to provide a minimum 12-foot wide access surrounding the detention pond at top of the bank and shall be located at the

crest of the dam. Fencing shall not extend across any spillway opening or downstream channel.

- Fencing is also required in cases where detention ponds are constructed using vertical walls with wall heights in excess of 4 feet (as measured from the top of the wall to the bottom of the pond). Fences shall be installed around the wall in such a manner as to deter access to the top of the wall and to deter someone from falling off the wall.
- Fencing of commercial and industrial detention facilities is also required as specified above.
- Any detention facility proposed for the exterior boundary of a project which will abut an existing, residential structure, shall provide a 10-foot landscape buffer.
- As a minimum, developments shall provide facility systems established to provide water quality improvements. This may be accomplished through the appropriate use of BMPs and natural wetland filtration buffers.

Detention can be waived in certain instances, i.e. - fee in lieu of detention, large lot sizes with small house, enhanced canopy/green space, as evaluated on a case-by-case basis.

The Division Manager of the Stormwater Management Division of the Cobb County Water System may grant variances to these standards on a case-by-case basis.

410 WATER AND SEWER

410.01 APPLICABILITY

This section shall apply to all current and potential users of the Cobb County Water System including users outside the County who, by contract or agreement with the County, utilize the services of the Cobb County Water System. Except as otherwise provided herein, the Director or his designated representative shall administer, implement and enforce the provisions of the section. Sections 502, 503, 504, and 600 provide additional details for designing, constructing, and inspecting sewer and water systems.

410.02 OBJECTIVES

Provide a clear and concise description of the Cobb County Water System standards for water and sanitary sewer system design and construction.

Provide guidance to developers and their engineers to facilitate compliance with said standards.

Furnish standards, which will create development of a quality water and sanitary sewer infrastructure.

410.03 SERVICE REQUIREMENTS

At the conceptual stage of a project, the owner/developer will submit a request to the Water System Engineering Division of the availability of water and sewer capacity for the project. The request should include, but not be limited to, the location of the project, the size of the development, and the type of service.

The owner/developer shall identify the immediate needs for services as well as ultimate needs based on information made available from the Water System and other County agencies/departments/divisions.

Water System personnel shall evaluate the impact of the requested service upon the water distribution system and the sewer system and shall make a determination regarding the availability of services.

For all new developments, Fire Flow tests are required. The developer should have the results of the test prior to starting the construction plans.

410.04 GENERAL DESIGN CRITERIA

410.04.01 Water Service Above 1,150 Ft. MSL

All commercial, institutional, multi-family or residential subdivisions proposed above sea level elevation of 1,150 feet will require a special design study to be accomplished and submitted to the Cobb County Water System for approval. This study must be completed and approved by the Water System prior to any development plans being submitted for the plan review process.

410.04.02 Line Extension Requirements

If it is required to extend a water main for a development, the developer must extend it the full length of the property's improved frontage. The size of the extension will be at least the size of the existing main and may be larger as directed by the Cobb County's Water Distribution Master Plan or fire protection requirements.

Developers are required to extend sanitary sewer service to their proposed development if the development can be connected to existing sewer by gravity flow and no further construction of planned sewers by Cobb County downstream of the proposed development is anticipated. The diameter of the extension will be at least eight inches or larger as directed by the Cobb County Water System. In the latter case, the Cobb County Water System will pay for upsizing.

Sanitary sewer must be extended through a proposed development as necessary to serve future development upstream of the development boundary.

If an existing water main or sanitary sewer line must be extended to serve his particular development, the developer would be required to pay all initial costs for the extension. Under some circumstances, the developer may be eligible to recover

portions of his costs from future developers in the area in accordance with the adopted Sewer Extension Policy in effect at the time.

Construction of dry sewer and septic tanks may be required under some circumstances if construction of planned sewers by Cobb County downstream of the proposed development is anticipated.

410.04.03 Street Cuts

All major street crossings should be bored and cased per Cobb County DOT and Georgia DOT.

If a bore cannot be made, the Cobb County DOT or Georgia DOT must permit the street cut.

410.04.04 Standard Drawings

Installation of water mains and related water appurtenances, sanitary sewer lines, and related sewer appurtenances shall be in accordance with applicable Water System Standard Details, Section 600.

410.04.05 Creek Crossing

All creek crossings will be constructed in “DRY” conditions created by the contractor to prevent downstream silting. The contractor will submit a written proposal or schematic to the Engineering Division as to the construction method proposed for the creek crossing. Proposals may include temporarily rerouting the creek with approved piping or temporarily damming the creek while pumping around the construction area.

410.04.06 Cased Bores

For water line installations in casing, blocking or skids will be placed under the carrier pipe prior to inserting pipe into the casing. Skids will be formed with pressure treated lumber and attached to the pipe with metal bands. Skid spacing will not exceed ten (10) feet on center.

For installations involving gravity sewer lines, manufactured casing spacers will be used to maintain proper line and grade of the carrier pipe. Spacer spacing will not exceed ten (10) feet on center. Spacers will be equal to Model 4810 stainless steel Casing Chocks as manufactured by Power Seal.

410.04.07 Requirements for Sewer Capacity Study

In the event that the Water System determines that the wastewater generated by a proposed development may result in surcharge or overflow of the sewer system, the Water System my require that a sewer capacity study be provided by the Developer. The scope of the study will be determined by the Water System on the basis of the specific situation, but may include flow monitoring, internal inspection, survey of grades, calculation of capacities, projection of future flows, or to other elements. As a result of this study, the Developer may be required to upsize downstream

facilities, enter into an agreement to participate in the cost of upsizing downstream facilities, or contribute to the cost of future improvements.

410.05 WATER

410.05.01 Applicability

To provide adequate water flow and pressure to the citizens of Cobb County for domestic usage and fire protection as outlined in the Water System Master Plan.

410.05.02 Design Criteria and Standards

Fire Flow Test

A Fire Flow Test must be conducted on the existing water line, for any new development, prior to submitting design drawings for approvals, to determine the adequacy of water supply for the project.

The test shall consist of a fire hydrant flow test and a 24-hour pressure test.

Test information furnished by the developer's engineer or sprinkler system design consultant shall be furnished to the Water System, shall be certified, and shall consist of:

- Static Pressure and GPM Flow
- Residual Pressure and GPM flow
- Projected flow in GPMs @ 20 p.s.i.
- Actual Pressure flow in GPM

Site map including fire hydrant locations

Fire flow test results must be included in the water plans prior to approval of the plan by the Water System. The Cobb County Water System may require a 24-hour pressure chart recording. Fire flow test must not be more than (6) months old at the time of first submittal to the Plan Review process.

Water supply must meet fire flow and domestic requirements for service area. If adequate supplies are not available, construction will be contingent upon approval of a design study and plan submitted by the owner.

Fire Flow Requirements

Minimum flow in gallons per minute at 20 psi by the duration in minutes by type of development is required to be as follows:

- Multi-family, commercial and institutional
  1,500 GPM for 30 minutes
- Residential
  1,000 GPM for 30 minutes

Spacing of Fire Hydrants

Multi-Family, Commercial, and Institutional:

Fire hydrants shall be spaced not more than 500 feet apart.

Single Family:

Single-family residential developments shall have a maximum fire hydrant distance of 500 feet from the hydrant to the most distant building served by that hydrant.

Location of Fire Hydrants

Fire Hydrants on County Roads:

Fire hydrants on existing County roads shall be located between the edge of the right-of-way and the water lines.

Fire Hydrants on New Streets:

Fire hydrants on new streets shall be located between the curbing and the water line.

Painting of Fire Hydrants

All hydrants shall be painted silver as needed. Reflective tape a minimum of 1 inch wide shall be placed around the entire circumference of the bonnet with the ends overlapping a minimum of 1 inch. White reflective tape shall be used on all public fire hydrants. Orange reflective tape shall be used on all fire hydrants that are not owned and/or maintained by Cobb County Water System. Painted tape or worn tape shall be replaced.

Contact the Cobb County Fire Marshal's Office for information on reflective tape that has been approved for use on fire hydrants.

Fire Main Size

Multi-family, Commercial and Institutional:

Water mains shall be a minimum of eight inches.

Single Family:

Water mains shall be a minimum of six inches.

Location of Water Mains and Appurtenances

Existing County Roads:

On existing County roads, water lines shall be located two feet from the edge of pavement with a minimum cover of 42 inches.

Water Lines on New Streets:

Water lines in new streets shall be located five feet from the back of the curb with a minimum depth of 42 inches.

Service for all new developments:

Dual water feed required for developments greater than 40 residential units, with more than 1,500 linear feet of water line, where adequate flows otherwise unavailable, or where special circumstances dictate same in the opinion of the Water System, unless waived by Director.

Service Laterals:
Service laterals shall be located as per Cobb County Standard Details with a minimum depth of 42 inches within the right-of-way and shallowing to a depth of 18 inches at the water meter location.

Water Meters:
Water meters shall be located at the edge of the street right-of-way or utility easement per Cobb County Standards and permanently marked in the curb with a "W".

Multi-unit Residential Building Submeters:
All new multiunit residential buildings permitted on or after July 1, 2012, shall also be constructed with a submeter for each unit in addition to the master meter located at the right-of-way. The purchase and installation of all meters are the responsibility of the developer.

Multi-unit Retail and Light Industrial Building Submeters:
All new multiunit retail and light industrial buildings permitted on or after July 1, 2012, shall be constructed with a submeter for each unit in addition to the master meter located at the right-of-way. The retail component of a mixed use development shall be constructed with a submeter for each retail unit. Newly constructed multiunit office buildings or office components of mixed use developments are not required to be constructed a submeter for each office unit. The purchase and installation of all meters are the responsibility of the developer.

Master Metered Single Family Residential Subdivisions:
Master metered single family residential subdivisions shall have an individual meter installed for each residence. The purchase and installation of the individual water meters are the responsibility of the developer or builder.

Water Valves:
Water valves at intersections shall be located as per Cobb County Standards. Valve location will be permanently marked in the curb.

Dead End Lines:
A gate valve and a minimum of two joints of pipe, mechanical joint cap or plug rodded to a concrete thrust collar shall be provided at the end of all lines where extension is proposed or anticipated for phased developments.

Connections to Existing Water Mains:
Isolation of the existing water main (with 48-hour minimum notice to CCWS and affected customers) for "cut-in" of appropriately sized mechanical joint tee/gate valve configuration is required for all size-on-size connections and all connections to existing asbestos-cement, PVC and cast-iron water mains. Wet-tap assembly connections shall only be allowed for size on larger size connections to existing ductile iron water mains.

Master Metered Developments:
Master metered developments shall be designed such that all fire hydrants on the property shall remain active should the Cobb County Water System terminate service to the buildings/units in the development. This may be accomplished by a separation of the domestic water supply from the fire hydrant supply line, a combined system with placement of isolation valves that terminate service to buildings/units and are accessible to Cobb County Water system personnel, or other means acceptable to the Cobb County Water System.

410.05.03 Water Testing and Inspection
Water testing and inspection shall be conducted in accordance with Sections 206 and 503.

410.06 SEWER

410.06.01 Applicability
To furnish sanitary sewer service to all new developments within Cobb County in accordance with the Water System Master Plan.

410.06.02 Design Criteria
Sewer system should be designed for the estimated tributary population. Tributary population is considered to be all areas upstream of the discharge point of the system being designed. Sewers will be designed to the uppermost property line of the development being served and extended up to 100' from the front property line.

New sewer systems shall be designed to accommodate peaked sewage flow plus anticipated maximum infiltration/inflow levels under open channel flow conditions. The pipe diameter and slope shall be selected to obtain the greatest practical velocities to minimize settling problems.

410.06.03 Sanitary Sewer Design Standards
No sanitary sewer collector less than eight (8") inches in diameter may be installed.

Service laterals in the public right-of-way or sewer easement shall be at least six (6") inches in diameter and shall terminate with a cleanout assembly. Service lateral

locations shall be permanently marked in the curb and installed by the developer according to the approved Detail entitled “Sewer Service Lateral” in Cobb County Standard Details, Section 600. Manhole spacing should not exceed 350 LF. Variance to exceed these lengths shall be documented and submitted for review by the Manager of the Engineering Division.

Sanitary sewer easements shall be a minimum of 20 feet wide.

No permanent structures shall be constructed within ten feet of the edge of a permanent easement on front and rear setbacks or within two feet on side setbacks.

Depth of sanitary sewer lines should not exceed 18 feet within a street and a maximum of 25 feet off-street. Variance to exceed these "depths" shall be documented and submitted for review by the Manager of the Engineering Division.

Manholes below the 100 year flood elevations will have bolt-down, water-tight rings and covers pre-cast into the manhole cone.

All man-hole adjusting rings used on manholes in the streets will be metal.
All utility manholes on right-of-way will be flush with the ground elevation.

Manhole joints shall be sealed with an approved sealant to prevent infiltration and inflow.

Drop connections of proper design are required at all manholes where the drop is greater than two feet.

All manholes shall be stabilized with a minimum of 6 inches of crushed stone under the base.

Minimum angle between influent and effluent sanitary sewer lines at a manhole shall be 90°.

The maximum allowable slope for a sanitary sewer line shall be 20%. All sewers greater than 15% in slope shall be DIP with appropriate restraints. The minimum allowable slope for a sanitary sewer line (8-inch diameter) is 0.5%; however, greater slopes are preferable. Sanitary sewer systems should be designed to maximize carrying capacity by making the smallest slope utilized in the system is as large as possible.

Ductile iron pipe shall be required under the following circumstances:

- When a sanitary sewer line has a cover of less than three feet
- When a sanitary sewer line crosses a storm sewer line with less than two feet of clearance

- When a sanitary sewer line passes laterally within one foot of a storm sewer line
- When a sanitary line is to have in excess of 18 feet of fill
- When a sanitary sewer exceeds a slope of 15%
- When a sanitary sewer is less than six feet under a street
- When a sanitary sewer line crosses a creek
- All drop connections in manholes unless otherwise approved by the Engineering Division Manager
- When a sanitary sewer line is located such that there is a possibility of a setback encroachment from a future structure

When practical, when DIP is required it should be used the entire length between manholes to avoid transition couplings. However, rigid PVC transition couplings, may be used using HARCO, Specified Fittings, Inc., or equal adapters.

Both vertical and horizontal alignments shall be reviewed with the Cobb County Water System prior to finalization.

For fast food restaurants expected, exterior traps are to be pre-installed and sized for each user at 1,000 gallons for the first 77 seats and less than 100 take-outs pr day, and 500 gallons for each additional 38 seats (or portions thereof). For 100 or more take-outs per day, consult with Water System Engineering.

All exterior grease traps will comply with the standard detail in Section 600.

Thoroughly tamped, compacted, granular bedding material is required for all gravity sanitary sewer pipe installations. This bedding shall be a minimum of 6 inches below the pipe and extend up to the mid-point (springline) of the pipe for the full trench width. The remainder of the pipe shall be covered with compacted select material to at least one foot above the pipe.

410.06.04 Interceptor Traps Design Standards

All grease traps, grit traps, sand traps, and oil-water separators required in this provision shall have a capacity and design in compliance with the following equations:

<u>Restaurants</u>

$$(S) \times (20) \times HR/(12) \times (LF) = \text{Capacity in Gallons}$$

S = Number of seats
LF = Loading Factor - 1.25 Interstate Highways
1.00 Otherwise

<u>Fast Food (disposable serviceware)</u>

$$(S) \times 12 \times HR/12 \times (LF) + (TO) \times 2.5 = \text{Capacity, gal.}$$

TO = Take-out orders/day.

Hospitals, nursing homes, other type commercial kitchens with varied seating capacity

$$(M) \times (5) \times (LF) = \text{Capacity in Gallons}$$

M = Meals per day
LF = Loading Factor - 1.0 with regular serviceware / 0.5 with disposable serviceware

Except that no grease trap shall be smaller than 750 gallons, no single separator shall be larger than 3,000 gallons. Where requirements exceed 3,000 gallons, multiple units in series shall be used. In cases of certain fast food restaurants or establishments with a potential to discharge large quantities of grease and oil, capacity requirements greater than 20 gallons per seat may be required.

Pre-packaged or manufactured grease traps may be approved by the CCWS Engineering Division with proper engineering and application review. A list of all such approved traps shall be maintained and available upon request.

For restaurants, other eating establishments, or commercial food preparation establishments:
All grease interceptors shall be exterior (except as noted below) and shall be sized in accordance with Cobb County Water System Specifications approved by the Cobb County Board of Commissioners. Active Interior Recovery Devices may be allowed with Water System approval for existing buildings (where installation of an exterior trap is impractical) or in conjunction with “tenant finish” permits (excepting the downstream tenant in a multiuse building) when sizing requirements are established and certified by a plumbing engineer and with the owner’s acknowledgement that upgrade upgrade may be required if the unit fails to comply with the maximum grease discharge limit of 150 milligrams per liter under Cobb County Code, or if the owner’s establishment causes a sewer manhole overflow (or “spill”).

Shopping Centers, Mixed Use Developments:

For developments where restaurants or food service establishments are expected but specific users or franchises are not yet identified, the development must provide an area(s) where exterior traps may be installed when required.

All exterior grease traps will comply with the standard detail in Section 600 or must be listed on the list of approved pre-packaged or manufactured grease traps.

410.06.05 Dumpster Traps Design Standards

Dumpster traps which serve non-food preparation establishments are require to be a minimum of 300 gallon but are not required to have a baffle and need only one access manhole. And must comply with the standard detail in Section 600 or must be listed on the list of approved pre-packaged or manufactured grease traps. Any dumpster trap serving a food preparation establishment must have a minimum capacity of 750 gallons and must comply with the standard detail #03410-20 in Section 600 or must be listed on the list of approved pre-packaged or manufactured grease traps.

410.06.06 Sewer Testing and Inspection

Sewer testing and inspection shall be conducted in accordance with Sections 206 and 504.

411 EROSION CONTROL

411.01 SOIL EROSION AND SEDIMENTATION CONTROL

Cobb County has adopted the best management practices as prescribed in the Soil Conservation Service's Manual for Erosion and Sediment Control in Georgia in the design of soil erosion and sedimentation control measures.

412 FENCES, BUFFERS AND BERMS, MAILBOXES, AND IRRIGATION SYSTEMS

412.01 FENCES

No fence or wall (other than subdivision entrance walls, noise abatement walls, or tennis court fences) shall be more than eight feet in height or be constructed on public right-of-way or future street right-of-way. If a fence is to be located adjacent to a public road and within the required setback within a residential zoning district, such fence shall not exceed six feet in height. Should a fence be erected in error within the right-of-way, Cobb County shall not be responsible for replacing or repairing the illegal structure.

412.02 BUFFERS AND BERMS

Landscape buffers and screening requirements are not applicable to residential zoning classifications of R-80, RR, R-40, R-30, R-20, R-15 and R-12. Landscape buffers and screening requirements are required for all other residential zoning classifications. Landscape buffers and screening requirements are required for all non-residential

zoning classifications. The buffering and screening requirements for applicable zoning classifications are listed within the individual zoning classification regulations of the Cobb County Zoning Ordinance, Chapter 134 of the Cobb County Code.
Parcels of land being developed may have zoning stipulation(s) that require buffering or screening. The official records in the Zoning Division Office should be checked prior to purchasing or developing land.

412.03 MAILBOXES

Mailboxes shall be constructed in accordance with approved materials and standards as required by the Postmaster General and the U.S. Postal Service and the Georgia Department of Transportation. Installation location shall be compatible with Standard Design Detail No. 80. Intersection sight distance and sidewalks shall not be obstructed by mailbox installation.

412.04 IRRIGATION SYSTEMS

Irrigation systems shall be constructed outside the right-of-way. Any damage by Cobb County to improperly located systems shall be the sole responsibility of the owner.

413 STRUCTURAL RETAINING WALLS

When permanent grades are proposed with a resulting slope steeper than one foot vertical for every two feet of horizontal displacement (2:1), an appropriate retaining structure shall be designed to reinforce or retain the resulting embankment. The structure shall be designed by a registered professional engineer to be constructed of reinforced concrete or other masonry materials designed by a registered professional engineer. Initiate latest revision O.S.H.A., or as may be amended from time to time. An engineered design may be substituted for the reinforced concrete design if the specific vendor has a pre-qualified acceptance from the Development and Inspections Division Manager. All structural components of the wall shall meet the minimum building codes for the proposed use.

When the necessity for an earth retaining structure is required for a vertical displacement of 30 inches or less, appropriate landscaping timbers, or approved equal, may be employed if no permanent structure is supported by the soil retained by the retaining wall. The use of railroad cross ties or other timber products will be allowed in these instances. Landscape timbers or other approved timber products (except for railroad cross ties) will be allowed for walls higher than 30 inches that do not support a permanent structure. Walls higher than 30 inches must be designed and inspected by a professional engineer licensed to practice in the State of Georgia.

All wall designs must demonstrate complete dimensions for line and grade. Wall design will consider foundation drainage and select backfill material for the proposed conditions.

Walls shall be located in such a fashion to not encroach upon existing or proposed drainage easements, drainage courses or floodplains to encumber the natural flow of surface runoff of stormwater. Walls shall be located at a distance from such watercourses to allow for anticipated future maintenance of the easement to prevent a safety hazard to the maintenance workers or to jeopardize the structural integrity of the wall.

Walls that are not attached to the permitted structure and require a foundation shall be permitted as a freestanding structure and shall be inspected as prescribed by the permitting procedure. Walls will be inspected for conformance with the approved design. Any deviation from the approved design will require the engineer of record to submit a certification of the non-conforming structure along with supporting calculations to indicate that the construction is consistent with the initial design parameters. In the event the inspector has not been provided ample opportunity to inspect the structure, the contractor must provide a certification of the construction by the engineer of record and geotechnical reports for concrete testing for strength, reinforcing steel specifications. Failure to comply with the requirements of this section will require that the remaining work cease and/or removal of nonconformance until the adequacy of structural integrity is demonstrated to the satisfaction of the Development and Inspections Division Manager.

Retaining walls that are proposed for the purpose of stormwater detention must be designed to demonstrate that the walls are capable of a hydrostatic load as measured from the top of the foundation footing to the highest elevation along the top of the wall. The hydrological design must allow for a free board dimension of 1/2 foot and an emergency overflow capacity equal to the peak discharge for the 100-year storm event. The routing calculations should not take into account the existence of the emergency overflow. Place the overflow device above the projected 100-year flood elevation within the detention area.

Retaining walls that are proposed to be greater than 6 feet in height and within 25 feet of any exterior property line without natural or enhanced screening, must be constructed with masonry or simulated masonry texture.

Any construction that may impact or be within the right-of-way of an existing or proposed water or sanitary sewer easement must be approved by the Water System.

414 FLOOD DAMAGE PREVENTION

Article II of the Flood Damage Prevention Ordinance specifies the limitations to development within a region identified as a flood hazard area. In order to determine that the proposed use conforms to the requirements of this ordinance, the permit for such development will be issued subject to a plan prepared by a registered professional engineer as required by that ordinance. The applicant must furnish

complete and sufficient plans, specifications, hydrological and engineering studies, or data necessary to support the following required documents or drawings: Grading, replanting, and drainage plans; proposed temporary and permanent drainage and sedimentation control structures and facilities; complete hydrologic studies based upon the level of the regulatory flood; a determination of the channel cross-section area required to carry the affected stream at the 100-year flood stage level; complete hydrologic studies to evaluate the total affects a development under review may have upon drainage facilities and systems. A written agreement to limit use and development in accordance with the approved plans and specifications may be required by the Community Development Director or his/her designee.

For a permit to be issued, hydrologic studies must demonstrate that the proposed filling or grading within a flood hazard area would not overload the capacity of the channel downstream or increase flood stages upstream. Equivalent flow and storage capacity are provided for and maintained by suitable improvements. In addition, if the studies and examination show that the proposed development or building would increase runoff to create a flood hazard, the permit shall be conditioned to require storage and release mechanisms that rainwater from impervious areas will enter the stream at the same rate as was characteristic of the unmodified site. No building permit shall be granted until all permitting conditions have been met.

All buildings located within or contiguous to a flood hazard area shall:

- Be constructed so that the lowest floor, including basements, is located a minimum of three feet above the base flood elevation, as prescribed by the Flood Damage Prevention Ordinance, which may be amended from time to time;
- Finished lowest floor elevations shall be shown, referenced to NGVD, on all plans for structures located within or adjacent to a flood hazard area;
- Floodproofing levels will be shown on all plans for new or renovated structures located within a flood hazard area. Floodproofing plans must be certified by a registered professional engineer;
- Construction in or adjacent to a Special Flood Hazard Zone A will require establishment of base flood elevation by registered professional engineer in addition to the above conditions; and
- On structures elevated above the base flood, the lowest horizontal structural member, or part thereof, shall be positioned not less than one foot above the base flood elevation. (Supported columns without cross bracing are excluded.)

No relocations or realignments of river and stream channels shall be allowed which result in an increase of flood elevation either upstream or downstream of the relocation or realignment on any property under different ownership, which is adjacent to the relocation or realignment. Provisions must be incorporated in the proposal to ensure that adequate stabilization will be provided for the altered watercourse. Adjacent governmental entities and the Georgia Department of Natural Resources must be notified prior to any alteration or relocation of a watercourse, and

evidence of such notification submitted to FEMA. Documents in the form of backwater analysis using methods approved by FEMA must be submitted to Cobb County.

Structures shall be designed to prevent flotation and collapse, and to prevent damage to nonstructural elements.

The location, design, elevation, and construction of all public utilities and facilities, such as sewer, gas, electrical, water systems, and streets, shall be in such a manner to minimize or eliminate damage by flooding. Construction of these facilities on piers shall be permitted. Accesses to utilities shall be above the base flood elevation. Unless a variance is granted, both public and private roadways shall be constructed not less than three feet above the base flood elevation measured at the centerline of the road. Roadways shall not be deemed to include a driveway, which services only one residence, structure, or property. Bridges shall be constructed that the bottom cord of the lowest horizontal structural member is not less than one foot above base flood.

All new developments for manufactured homes must meet the specific requirements of the Flood Damage Prevention Ordinance.

Any replacement or substantial improvement to any structure located and grandfathered within a flood hazard area, which would elevate the value of the structure to or above 150% of the value at time of beginning of such replacement or substantial improvement, will require modifications to the total structure to bring the total structure into compliance with the requirements of the Flood Damage Prevention Ordinance.

Any development activities within the FEMA designated floodway must be approved by Cobb County with overview by FEMA. Development activities within the flood fringe may be permitable through Cobb County only.

415 TIMBER HARVESTING/CLEARING

415.01 APPLICABILITY

These standards apply to any tree cutting, clearing, or clearing and grubbing projects for which no full site plan is being reviewed by Cobb County staff or for which no conceptual site plan has been approved by the Cobb County Board of Commissioners.

Exemptions described in the Cobb County Soil Erosion and Sedimentation Control Ordinance Chapter 50 shall also apply to these standards subject to the following criteria:

- Agricultural practice shall be verified as on-going through documentation such as historical records of timber sales, a forest management plan on file with the

Georgia Forestry Commission (GFC), livestock ownership, or boarding records and the like; and,

- The owner or owner's representative involved in any exempted timber harvesting, clearing, or clearing and grubbing shall conform to all applicable general design principles of the E & S Ordinance set forth in Chapter 50 and, when applicable with all Best Management Practices for timber harvesting as described in the GFC document "Recommended Best Management Practices for Forestry in Georgia", and the U.S. Clean Water Act Section 404, EPA, 40 CFR, Part 232.3 (c)(6); and,
- Prior to any exempted timber harvesting, clearing, or clearing and grubbing activity the land owner and/or owner's representative shall meet on-site with the Cobb County Arborist to determine the limits of land disturbing activities, review agricultural documentation and discuss any applicable zoning requirements, BMPs, and the like.

415.02 GENERAL REQUIREMENTS

Permittees shall conform to all applicable general design principles of the E & S Ordinance set forth in Chapter 50 and with all Best Management Practices for timber harvesting as described in the GFC document "Recommended Best Management Practices for Forestry in Georgia", and the U.S. Clean Water Act Section 404, EPA, 40 CFR, Part 232.3 (c)(6).

In addition, the following requirements shall be applied to all tree cutting, clearing, or clearing and grubbing projects:

- Residential Zoned Property
- The exterior boundary of the site shall have a buffer area 40 feet wide. Any tree cutting in this area shall be limited to the non-mechanical removal of pine *(Pinus spp.)* or yellow-poplar *(Liriodendron tulipifera)* trees with stump diameters greater that 14 inches; provided, that a minimum of 50 square feet of basal area per acre remains in good condition in the buffer area at completion of the project. The non-mechanical removal of dead, diseased, or insect infested trees is also allowed in this buffer (subject to verification by the Cobb County Arborist). Significant gaps in this buffer area shall require designing and implementing a replanting plan to be approved by the County Arborist.
- The interior of the site shall be restricted to a "Residential Thinning" whereby a minimum of 30 square feet of basal area per acre shall remain in addition to the buffer area described above (except where logging decks are established or grading activity is approved). Trees to be preserved to meet this requirement must be identifiable both before and after the cutting operation either by species or by a continuous marking around the trunk at 4.5 feet and at .5 feet above the ground. These trees must be left in good condition with no injuries to the trunk, crown, or root system, which would predispose them to disease or pest infestation.
- All pine logging slash with stems larger than five inches in diameter shall be chipped and returned to the site or removed from the site to reduce the possibility of insect infestations.

- The County Arborist may alter the "Residential Thinning" standards to address insect or disease infestations documented by a registered forester.
- All Sites Zoned Other than Residential
- The exterior boundary of the site shall have a buffer area 50 feet wide. This buffer area shall remain undisturbed except for approved access points. The non-mechanical removal of dead, diseased, or insect infested trees is also permitted (subject to verification by the Cobb County Arborist). Significant gaps in this buffer area shall require designing and implementing a replanting plan to be approved by the County Arborist.
- All pine logging slash with stems larger than five inches in diameter shall be chipped and returned to the site or removed from the site to reduce the possibility of insect infestations.

415.03 PERMITTING

Tree cutting, clearing, or clearing and grubbing projects, which result in the sale of timber shall, conform to State law regarding payment of taxes. A Georgia Department of Revenue Form PT-283T along with the required payment must be submitted to the Cobb County Tax Assessor's Office within the time frame prescribed by State law. Failure to do so shall be considered a violation of the Cobb County Erosion and Sedimentation Control Ordinance, as well as the tax law. Call the Tax Assessor's Office at 528-3100 for more information.

- Provide documentation regarding the type of timber sale, estimated date of purchase, and estimated PT-283T submittal date when submitting plans to the Community Development Agency for review.

Applications for tree cutting, clearing, or clearing and grubbing shall be in accordance with current land disturbance permit plan review procedures.

Plans and other supportive documents submitted for a Land Disturbance Permit for tree cutting in areas greater than five acres shall bear the signature of a registered forester.

The minimum size of plans shall be 11" x 14". The maximum size shall be 24" x 36".

Plans shall include the following information:

- Owner's name, address, and phone number
- Consultant's and contractor's names, addresses, and phone numbers
- Location/vicinity map
- Land Lot(s) and district(s)
- North Arrow
- Scale (minimum 1" = 100')
- Closed property boundary showing bearings and distances of all property lines
- Current zoning of property
- Current zoning of adjacent properties

- Total acreage of property and approximate acreage of area to be disturbed
- 24-hour emergency contact name and phone number(s) in bold type (no smaller than 20 point)
- Names of adjoining roadways
- Location of and detail for the truck exit (crushed stone pad)
- Approximate location of the following land features:
  - all state waters
  - topography at 20' intervals (U.S.G.S. Quadrangle Map)
  - forest cover areas
  - 100-year floodplain
  - wetlands
- Limits of land disturbance activity
- Approximate locations and dimensions of any logging decks
- Location of any state water buffers (dimension 25 ft. undisturbed zones from the top of each bank)
- Location of the Streamside Management Zone (dimension required width)
- Approximate locations of any haul roads
- Approximate locations of any stream crossings showing approximate width of crossing (bank to bank) and method of sediment control (rock rip-rap or culvert);
- Approximate locations of any historical features including cemeteries or a note indicating the absence of such on the site;
- Delineation and labeling of any required buffer zones around the perimeter of the property;
- A detail of the method to be used to delineate all buffers on the site;
- Expected time frame in which the operation will occur;
- Additional information as may be required by Cobb County Staff to perform a proper review of the project and assure that the intent of the Soil Erosion and Sediment Control Ordinance is met; and the following notes:
  - The Cobb County Community Development Agency reserves the right to require additional erosion and sedimentation control measures deemed necessary.
  - The contractor shall implement all Best Management Practices for forestry as prescribed by the Georgia Forestry Commission and the U.S. Environmental Protection Agency.
  - No trees may be cut in buffer zones marked "Undisturbed" on this plan.
  - In perimeter buffer zones not marked "Undisturbed", tree cutting shall be limited to the non-mechanical removal of pine *(Pinus spp.)* or yellow-poplar *(Liriodendron tulipifera)* trees with stump diameters greater than 15 inches; provided, that a minimum of 50 square feet of basal area remains in good condition in the buffer area at completion of the project. The non-mechanical removal of dead, diseased, or insect infested trees is also allowed in this buffer (subject to verification by the Cobb County Arborist).
  - All buffers of State Waters shall remain undisturbed except for haul road crossing points.

- Projects that are restricted to a "Residential Thinning" must leave a minimum density of 30 square feet of basal area throughout all areas not designated as buffers or logging decks. Trees to be preserved to meet this requirement must be identifiable both before and after the harvest either by species or by a continuous marking around the trunk at 4.5 feet and at .5 feet above the ground. These trees must be left in good condition with no injuries to the trunk, crown, or root system that would predispose them to disease or pest infestations.
- All pine logging slash with stems larger than five inches in diameter shall be chipped and returned to the site or removed from the site to reduce the possibility of insect infestation.
- Logging decks, temporary haul roads, skid trails, and any other disturbed areas left idle for two to four weeks will be restored to their contours and established to temporary vegetation (Ds2). These disturbed areas left idle for four weeks or more will be established to permanent vegetation (Ds3). All areas remaining at the end of the project will be established to permanent vegetation within two weeks.
- When hand planting, mulch (hay or straw) should be uniformly spread over seeded area within 24 hours of seeding.
- During unsuitable growing seasons, mulch will be used to a temporary cover (Ds1). On slopes that are 4:1 or steeper, mulch will be anchored.
- The Cobb County Clearing Permit must be displayed on site at all times during the project operation and in plain view from an adjacent County road or street.

Before any activity can begin, an inspection must be performed for basal area confirmation, erosion control devices, and buffer area delineation. At this time, the contractor must show a current Cobb County Business License or Registration Certificate. At completion of the project, a final inspection must be performed.

416 TREE PRESERVATION & REPLACEMENT

These standards have been established under the authority of the Cobb County Tree Preservation and Replacement Ordinance (Ord. 9-27-88); specifically, Sections 50-221, 50-223 and 50-224 of the Official Code of Cobb County Georgia.

The Tree Preservation and Replacement Ordinance was enacted to provide standards for the preservation and/or replacement of trees as part of the land development and building construction process. The purpose is to make Cobb County a more attractive place to live, provide a healthy living environment, and better control stormwater runoff, noise, glare and soil erosion.

The intent of these standards is to provide the necessary information to facilitate development project design, plan review, and enforcement processes in order that the

provisions of the ordinance are administered in the most effective, efficient and economical manner.

The terms and provisions of the Tree Preservation and Replacement Ordinance and these standards shall apply to any activity, private and/or governmental, on real property that requires the issuance of a land disturbance permit within Cobb County. No land disturbance permit shall be issued for full site development by the Community Development Agency without a determination that the proposed development is in compliance with the provisions of these regulations.

416.01 DEFINITIONS

Buffer

Water Quality Buffer: A designated area of adequate width to provide for protection of the streambank, channel soils and vegetative cover as determined by the Community Development Agency, adjacent to any state waters, water courses, or drainage areas, in which no land disturbing activities shall be undertaken unless approved in the plan. Such activities may include stream crossings for transportation routes or utilities construction; sewer and water line construction, and minor landscaping or channel improvement activities to stabilize critical areas.

Zoning Buffer: Any area required to remain undisturbed or to be planted as a condition of zoning.

Basal Area

The cross-sectional area of a tree trunk at four and one-half feet above the ground or diameter breast-height (dbh) expressed herein in terms of “units” per acre.

Caliper

The standard for trunk measurements of nursery stock. Caliper of the trunk shall be taken at six inches above the ground for trees up to and including four-inch caliper size, and 12 inches above the ground for trees larger than four-inch caliper.

Commercial Development

Any development that is not a single-family residential subdivision.

Construction Permit

A permit issued on-site by Community Development site inspection staff to allow the commencement of any clearing, grubbing and/or grading. This permit is issued only after a Land Disturbance Permit has been issued, and all erosion control and tree protection measures have been installed in accordance with the approved plan.

Critical Root Zone

The minimum area beneath a tree which must be left undisturbed in order to preserve a sufficient root mass to give a tree a reasonable chance for survival. The

Critical Root Zone of any given tree shall be represented by a concentric circle with a radius equal to 12 times the diameter of the tree trunk.

Density Factor
A unit of measure used to prescribe the calculated tree coverage on a site.

Diameter
Diameter Breast-Height (DBH): The standard measure of tree size (for trees existing on a site). The tree trunk is measured at a height of four and one-half (4.5) feet above the ground. If a tree splits into multiple trunks below 4.5 feet, measure the trunk at its most narrow point beneath the split.

Director
Director of the Community Development Agency or the successor to those duties, by whatever title designated, or the director's designee.

Hardwood Tree
Any tree that is not coniferous (cone bearing). This definition is based on the colloquialism and does not necessarily reflect any true qualities of the tree.

High Value Forest
A forest composed of mature hardwood trees, or a stand of mature softwood trees that have a critical environmental function such as erosion control on steep slopes, screening or buffering. Only trees in good condition are considered elements of such a forest.

Land Disturbance Permit
The authorization necessary to begin land-disturbing activity.

Land Disturbing Activity
Any land change which may result in soil erosion from water or wind and the movement of sediments into the waters or onto land within Cobb County, including but not limited to clearing, grubbing, stripping, dredging, grading, excavating, transporting and filling of land.

Overstory Tree
A tree of a species or variety thereof that, under normal forest conditions will compose the top layer or canopy of vegetation and generally will reach a mature height of greater than 40 feet.

Parking Bay
A set of contiguous parking spaces and the adjacent islands and peninsulas devoted to planting trees at either end and interior to said sets of parking spaces.

Protected Zone
All areas of the parcel required to remain in open space, and all designated buffers or tree save areas, or conditions of zoning approval.

Replacement Tree
A new tree planted on a site to meet minimum site density factor requirements (regardless of whether trees existed prior to any development).

Root Zone
The area adjacent to a planted tree in which roots can grow unimpeded.

Softwood Tree
Any coniferous (cone bearing) tree. This definition is based on the colloquialism, and does not necessarily reflect any true qualities of the tree.

Specimen Tree
Any tree which qualifies for special consideration for preservation due to its size, type and condition. See Section 416.05 for specific criteria defining specimen trees.

Street Yard
Any area of the site that abuts a public right-of-way (or improved access-way providing access to the interior of a development).

Subdivision
A single-family residential development.

Tree
Any living, self-supporting woody perennial plant which normally obtains a trunk diameter of at least two inches and a height of at least ten feet, and typically has one main stem or trunk and many branches.

Tree Save Area
All areas designated for the purpose of meeting tree density requirements, saving specimen trees, and/or preserving natural buffers.

Understory Tree
A tree of a species or variety thereof that, under normal forest conditions grows to maturity beneath overstory trees and will generally reach a mature height of less than 40 feet.

416.02 DENSITY REQUIREMENTS

The tree density required by the Tree Preservation and Replacement Ordinance may be achieved by counting existing trees to be preserved, planting new trees, or some combination of the two as represented by the formula: SDF = EDF + RDF (see

below). The tree density requirement must be met whether or not a site had trees prior to development.

416.02.01 Site Density Factor

Site Density Factor (SDF) is the minimum tree density required to be maintained on a developed site (15 units per acre). The SDF is calculated by multiplying the number of site acres by 15. Determine the affected site acreage by starting with the area of the parcel(s) of land on which the project is located. Add the area of any off-site slope easements and subtract the area of any 100-year flood plain, wetland or utility easement.

416.02.02 Existing Density Factor

Existing Density Factor (EDF) is the density of existing trees to be preserved on a site. Trees that exist in any 100-year flood plain, wetland or utility easements cannot be counted toward meeting tree density requirements, unless they are in an undisturbed buffer containing a restrictive covenant in favor of Cobb County for conservation uses.

Table A
DIAMETER SIZE TO UNIT VALUE
For existing trees to be preserved

Size Class	Diameter (dbh)	Unit Value
1	1 – 4 inches	0.1
2	5 – 8 inches	0.3
3	9 – 12 inches	0.6
4	13 – 16 inches	1.2
5	17 – 20 inches	1.9
6	21 – 24 inches	2.8
7	25 – 28 inches	3.8
8	29 – 32 inches	5.1
9	33 – 36 inches	6.5
10	37 – 40 inches	8.1

The unit value of any individual tree may be determined by using the formula: $(\text{Diameter})^2 \times .7854 \div 144$

The EDF is calculated by converting the size of individual trees to density factor units. See Table A above.

416.02.03 Replacement Density Factor

Replacement Density Factor (RDF) is the density of new trees to be planted on a site. Calculate the RDF by subtracting the EDF from the SDF.

The density factor credit for each size of replacement tree is shown in Tables B-1 through B-3.

Any number or combination of transplantable sized trees can be used as long as the total density factor units will equal or exceed the RDF and the species mix is acceptable to the Community Development Agency.

Table B-1

CALIPER SIZE TO UNIT VALUE
For deciduous trees normally sold by caliper size

Caliper Size	Unit Value
1 – 1½ inches	.4
2 – 2½ inches	.5
3 – 3½ inches	.6
4 – 4½ inches	.7
5 – 5½ inches	.9
6 – 6½ inches	1.0
7 – 7½ inches	1.2
8 – 8½ inches	1.3

Table B-2 HEIGHT TO UNIT VALUE Deciduous Trees Not Normally Sold by Caliper Size	
Height	Unit Value
6 - 8 feet	.4
10 – 12 feet	.5
14 – 16 feet	.6
18 – 20 feet	.7
22 – 24 feet	.9

Table B-3 HEIGHT TO UNIT VALUE Evergreen Trees	
Height	Unit Value
5 - 6 feet	.4
7 - 8 feet	.5
10 – 12 feet	.6
14 – 16 feet	.7
18 – 20 feet	.9
All evergreens other than pines must be a minimum of 5 to 6 feet height at the time of planting. Height rather than caliper size will determine the unit value of evergreens.	

If a tree is specified on the plan to be of a size that falls between two size classifications, the lower number will determine the unit value to be assigned. For example:

Willow Oak	3½ - 4 inches	.6 unit
River Birch	12 - 14 feet	.5 unit
Southern Magnolia	6 - 7 feet	.4 unit

416.02.04 Unique Density Requirements

Subdivision Developments

Every lot in a subdivision shall have a minimum of two units of trees. These trees can be counted as part of the required 15 units per acre, but in no event shall any residential lot have less than 2 units of trees. If trees must be planted on any lot, these trees must be a minimum of two (2) inches in caliper, and at least one of the trees must be a minimum of three (3) inches in caliper and planted in the front setback area. This requirement shall apply to the developer or homebuilder, whoever is responsible for obtaining the certificate of occupancy for the individual lot.

The county shall require that improvements be located so as to result in minimal disturbance to the natural topography of the lots and the protection of the maximum number of mature trees on the lot. It is the specific intent of this section to require that damage to mature trees located within setback and required yard areas be minimized to the greatest degree possible under the particular circumstances, as determined by county staff. If a reasonable option has been considered or presented to the county which would preserve the maximum amount of forest cover if not for conflicting with other regulations established by the county code or the county's development standards, the director of community development or his/her designee may issue an administrative variance in accordance with section 134-35.

Subdivision developments proposed in areas that are primarily pastureland may meet Tree Ordinance requirements in one of the following ways:

- Plant trees at 15 units per acre based on the area of the subdivision infrastructure (road rights-of-way, utility easements and drainage structures); or,
- Preserve and/or plant trees at 15 units per acre based on the area of the entire subdivision.

Tree Preservation areas for subdivisions should all be in common areas, or in buffers required to be undisturbed by zoning or other regulations. If tree preservation areas must be on individual lots, the lots must be of sufficient size to reasonably expect the trees to be preserved at the completion of the building process.

Commercial Developments

A sufficient number of trees must be planted in interior portions of parking lots to achieve a ratio of one tree per 1,140 square feet of parking bay area. In addition, every parking space must be within 50 feet of the trunk of a tree to assure uniform distribution of trees throughout the parking area.

All street yards shall be planted with one tree for each thirty-five (35) linear feet exclusive of driveways, access ways and sight distance triangles.

Trees planted to meet the parking lot and street yard requirements must meet or exceed the minimum standards specified in Section 416.04.

Parking lot or street yard trees can be counted as part of the required 15 units per acre, but they may be an additional requirement if the 15-unit per acre requirement is met elsewhere on the site.

Redevelopment Projects

Redevelopment projects as defined in Sec. 102.01 shall have the following modifications to density requirements:

The 15-unit per acre requirement shall not be applied.

Street yard trees as specified above will be required, but the minimum size shall be 1.5-inch caliper (not 3-inch as required in Sec. 416.04.03).

Parking lot trees as specified above will be required in all parking areas associated with the redeveloped portion of the project. The minimum size of these trees shall be 1.5-inch caliper (not 3-inch as required in Sec. 416.04.03)

Out parcels to Shopping Centers

These shall meet all Tree Ordinance density requirements separate from the overall shopping center.

Subdivision Amenity / Recreation Areas

These shall meet all Tree Ordinance density requirements separate from the overall subdivision.

Clearing Only Permits

See Cobb County Development Standards and Specifications Section 415.

Grading Only Permits

Grading projects for which no full site plans have been submitted for review by Cobb County staff are subject to the same buffer requirements as clearing operations. The grading plan shall conform to the review requirements listed in the Cobb County Development Standards and Specifications Section 103.04 (Borrow/Fill Permit). An estimated completion date must be noted on the plan.

Buffer areas that must be landscaped shall be planted at the completion of the grading project or postponed to an appropriate planting season provided that appropriate performance security arrangements are made. Planted buffers are subject to maintenance inspection procedures.
Compliance with Tree Ordinance requirements for speculative grading may be postponed for up to six (6) months provided that appropriate performance security arrangements are made.

Additions to Existing Projects

For additions to existing projects, the 15 units per acre density requirement may be met in one of the following ways:

- Calculate the area of any new land disturbance and/or improvements and add replacement trees based on that area (existing trees elsewhere on the site may not be counted with this option); or,
- Base density requirements on the total site area and count any existing trees on the site (subject to all restrictions noted elsewhere in these standards).

Phased Projects

Where development will occur in increments, density calculations may be based on a site area defined by an established or estimated phase line or construction limit line. Existing trees to be counted toward meeting the density requirements must be within the phase line or limits of construction.

416.03 TREE PRESERVATION STANDARDS

The following section establishes standards by which plans and field conditions are to be evaluated to determine compliance with the tree preservation intent of the Cobb County Tree Preservation and Replacement Ordinance.

416.03.01 Tree Inventories and Surveys

All trees that are to be counted toward meeting density requirements must be inventoried.

Projects over two acres must provide a plan delineating all ground cover-types (including pasture or forest) on the site and a general description of the types of trees and range of tree sizes in each forest cover-type (e.g. Mixed pines and upland hardwoods 12" to 20" dbh).

Any tree with a trunk diameter of ten (10) inches or greater that has a surveyed location shown on the plan will receive double the normal unit value credit if there is to be no construction activity in that tree's critical root zone (CRZ). These trees must be represented on the plan by a circle the size of the CRZ.

Sampling methods may be used to determine tree densities for large forested areas subject to prior approval of the Cobb County Arborist. Written guidelines for performing sample inventories can be obtained from the Arborist.

Specimen trees must be shown on the plan with an indication whether they are to be retained or removed. Surveyed locations are requested when the preservation of a specimen tree is questionable, or when a site design alteration is feasible. Approximate locations are acceptable otherwise.

416.03.02 Plan Review Standards

All Protected zones must be delineated on the plan along with the location of tree protection devices.

Protected zones must be of sufficient size to reasonably expect the majority of trees growing there to survive the proposed construction impacts. Tree save areas must be a minimum width of 50 feet unless a smaller width is approved by the County Arborist/Landscape Architect or Board of Commissioners.

When proposed construction impacts are, in the opinion of the County Arborist, likely to cause severe decline and/or death of an affected tree, that tree will not receive credit for meeting Tree Ordinance requirements.

All buffers with existing trees must be delineated on plans as Tree Save Areas. Land disturbance within any buffer is subject to Community Development Agency approval. The applicant must clearly demonstrate the need for the proposed disturbance.

For subdivisions, all buffers shall be delineated on the final plat and identified as preservation easements. Final plats must also identify any individual lots with other tree preservation and/or planting requirements. These lots must be identified on the plat with a symbol and a corresponding note indicating the homebuilder's responsibility for such tree preservation and/or planting requirements.

416.03.03 Construction Standards

Purpose of Tree Protection Devices

Tree protection devices are necessary to eliminate activities detrimental to trees including but not limited to:

Soil compaction in the critical root zone resulting from heavy equipment, vehicular or excessive pedestrian traffic, or storage of equipment or materials;

Root disturbance due to cuts, fills or trenching;

Wounds to exposed roots, trunks or limbs by mechanical equipment;

Other activities such as chemical storage, cement truck cleaning, fire, etc.

Location and Types of Tree Protection Devices

Tree protection devices are to be installed as shown on the plan or otherwise completely surrounding the critical root zone of all trees to be preserved.

The installation of all tree protection devices will be verified prior to the issuance of the construction permit for clearing and/or grading, and again, prior to the approval of the final plat for subdivisions.

Once protected zones are established and approved, any changes are subject to Community Development Agency review.

Materials

Tree protection shall consist of chain link, orange laminated plastic, wooden post and rail fencing or other equivalent restraining material. In addition to fencing, where tree trunks are in jeopardy of being damaged by equipment, 2 x 4-inch boards may be requested to be strapped around the trunks of the trees.

Sequence of Installation and Removal

All tree protection devices shall be installed prior to any clearing, grubbing or grading, or at the same time as the installation of erosion and sedimentation control devices. Tree protection must remain in functioning condition throughout all phases of development and construction.

Tree protection fences must be installed in accordance with the approved land disturbance permit. For projects less than two (2) acres, Cobb County staff will verify appropriate tree fence installation. For projects greater than two (2) acres, a professional designer must verify the tree protection fences were installed as shown on the approved plans or in locations that provided better tree preservation potential. This verification must be submitted to the Community Development Agency prior to the approval of the final plat for residential subdivisions, or prior to the issuance of building permits for commercial projects.

Other Specifications

Clearing - Where clearing has been approved, trees shall be removed in a manner that does not adversely impact the trees to be preserved. Avoid felling trees into protected zones or disturbing roots inside the protected zones.

When digging near trees, the contractor shall prune all exposed roots one (1) inch in diameter and larger on the side of the trench adjacent to the trees. Pruning shall consist of making a clean cut flush with the side of the trench to promote new root growth. Pruned roots shall be protected from drying and backfilled as soon as possible.

Pruning of tree limbs to provide clearance for equipment and materials or for any other reason shall be done according to standard arboricultural practice (See ANSI A300-2001 Standards for Tree Care Maintenance Operations Part 1 and ANSI Z133.1 American National Standard for Tree Care Operations Safety Requirements).

Erosion and Sedimentation Control - All erosion and sedimentation control measures shall be installed in a manner that will not result in the accumulation of sediment in a protected zone.

Signage - All protected zones shall be designated as such with "Tree Save Area" signs posted visibly on all sides of the fenced-in area. These signs are intended to inform subcontractors of the tree protection process. Signs requesting subcontractor cooperation and compliance with the tree protection standards are recommended for site entrances.

416.04 TREE REPLACEMENT STANDARDS

The following section establishes standards by which plans and field conditions are to be evaluated to determine compliance with the tree replacement intent of the Cobb County Tree Preservation and Replacement Ordinance.

Tree replacement plans should be prepared with appropriate consideration given to the function of trees in the urban landscape. Every effort should be made to maximize the environmental benefits of the plant materials.

416.04.01 Planting Specifications

Trees selected for planting must be free from injury, pests, disease, nutritional disorders or root defects, and must be of good vigor in order to assure a reasonable expectation of survivability.

Standards for transplanting shall be in keeping with those established in the International Society of Arboriculture publication, *Tree and Shrub Transplanting Manual* or similar publication. Reference the American Association of Nurserymen publication *American Standard for Nursery Stock* (ANSI Z60, 1973) for plant material quality specifications. Reference the *Manual of Wood Landscape Plants* (Michael Dirr, 1983, Castle Books) or similar publication for information on tree species site requirements.

Installed trees must be allowed to grow to their natural size and shape and not be pruned in conflict with ANSI A300 standards (no topping, limbing up, lion tailing, etc.).

416.04.02 Species

Species selected as replacement trees must be quality specimens, and must be ecologically compatible with the intended growing site.

Flowering ornamental species are typically not acceptable for use in meeting density requirements.

When less than 10 trees are shown to be planted on a project, one species of tree may be specified. When 10 to 50 trees are shown, a minimum of three species of trees are required. When more than 50 trees are shown, a minimum of five (5) species of trees are required.

When 10 or more trees are to be planted, no single genus shall represent more than 30 percent of the Required Density Factor.

Where summer shading is required or recommended, the use of deciduous overstory tree species is necessary.

416.04.03 Parking Lots and Street Yards

All root zones must be a minimum of eight (8) feet in width (measured from back-of-curb where curbing is installed or edge of pavement otherwise).

The root zone for overstory trees must be a minimum of 200 square feet. If that area is shared with other trees, add 80 square feet for each additional tree.

The root zone for understory trees must be a minimum of 100 square feet. If that area is shared with other trees, add 40 square feet for each additional tree.

Parking lot islands, peninsulas and medians must have clean, cultivated soil to a total depth of two and one-half (2½) feet. Native subsoil is acceptable in parking lot islands, peninsulas and medians if the entire area is amended with appropriate soil improvements and thoroughly tilled. Otherwise, loamy topsoil is required.

Parking lot islands and medians must be covered with four (4) inches of organic mulch material replaced as needed. To discourage soil compaction from pedestrian traffic, these areas may be planted with low evergreen shrubs. To reduce root zone competition, grass is typically not permitted in these islands and medians. Variances to this requirement (as it relates to the prohibition of grass) shall be reviewed on a case-by-case basis by the County Arborist or County Landscape Architect.

Light poles are prohibited in parking lot islands, peninsulas and medians unless a lighting plan is submitted for review and approval by the County Arborist or County Landscape Architect.

No fastigiate (narrow crowned) varieties of trees are permissible in parking lots.

Trees planted to meet parking lot and street yard requirements must be a minimum of three (3) inches in caliper.

The use of at-grade planting areas in parking lots to promote stormwater runoff treatment and to supplement irrigation needs is encouraged; provided that the trees planted there will not be adversely impacted and that the system is designed by a licensed, professional civil engineer.

Where street yard trees will be planted within 16 feet of the edge-of-pavement of a public street with a design speed of 45 mph or higher, or in areas beneath overhead utility lines, the use of an understory species is required.

416.04.04 Irrigation

Newly planted trees and existing trees subjected to construction impacts typically need supplemental watering when rainfall is inadequate. Commercial project applicants should be prepared to discuss how trees are to be watered during their establishment or transition period, and to possibly note on the plan the proposed method of irrigation.

416.04.05 Public Street Rights-of-way

Trees planted within publicly maintained street rights-of-way cannot be counted toward the tree density requirement for a site unless otherwise approved by the Community Development Agency and the County Department of Transportation.

Indemnification and maintenance agreements for commercial properties must be recorded with the Cobb County Department of Transportation prior to plan approval for within County rights-of-way.

416.04.06 Subdivisions

Trees shown to be planted in common areas within a subdivision (outside of amenity areas) shall be planted by the subdivision developer. These trees must be in place before the final plat is approved, unless fiscal surety is provided and approved by the Director of Community Development.

Trees shown to be planted on individual lots must be planted by the homebuilder. These trees must be in place before the certificate of occupancy for the affected lot is approved, unless fiscal surety is provided and approved by the Director of Community Development.

416.05 SPECIMEN TREES

416.05.01 Identification

Some trees on a site warrant special consideration and encouragement for preservation. These trees are referred to as specimen trees.

The following criteria are used by the Community Development Agency to identify specimen trees. Both the size and condition criteria must be met for a tree to qualify.

Size Criteria:

Overstory hardwoods:	30-inch diameter or larger
Overstory softwoods:	36-inch diameter or larger
Understory trees:	12-inch diameter or larger

Condition Criteria:
Life expectancy of greater than 15 years;
Relatively sound and solid trunk with no extensive decay;
No more than one major and several minor dead limbs (hardwoods only);
No major insect or pathological problem.

A report for each tree of specimen size that is shown to be impacted by the proposed development must be submitted to the Community Development Agency (Site Plan Review Section) to determine whether that tree meets the condition criteria for specimen status. The report must be prepared and signed by a certified arborist or registered forester. The report must contain a site plan showing an accurate location of the tree (a numbered aluminum tag on the tree that is referenced on the plan is helpful for finding the tree on the site). In addition, the report must contain a narrative describing the tree's species, surrounding conditions, and detailed description of the tree's condition along with digital pictures to illustrate any defects. The final determination of specimen tree status will be made by county staff after reviewing the report.

416.05.02 Preservation

In order to encourage the preservation of specimen trees and the incorporation of these trees into the design of projects, additional density credit will be given for specimen trees that are successfully saved by a design feature specifically designated for such purpose. Credit for any specimen tree thus saved would be three (3) times the assigned unit value shown in Table A under Section 416.02.

416.05.03 Removal, Replacement and Preservation

If a specimen tree is to be removed, a plan or written documentation indicating the reason for the removal must be submitted to the Community Development Agency.

The removal of any specimen tree must be mitigated in one or more of the following manners:

- Replace the removed specimen tree with minimum four-inch caliper trees of comparable species at a rate equal to the unit value of the tree removed. These replacement trees would be in addition to the 15-unit per acre minimum requirement.
- In addition to the minimum 15 unit per acre requirement, preserve stands of high value forest or specimen trees at a rate 3 times the unit value of the removed specimen tree(s). Such areas must be outside of the 100-year flood plain, wetlands and buffers, unless in an undisturbed buffer containing a

restrictive covenant in favor of Cobb County for conservation uses. Trees for which recompense credit is given must have surveyed locations and must be shown on the plan with concentric circles representing their Critical Root Zones. Recompense trees shall not receive the extra credit outlined in Section 416.03.01. Protective fencing must be established at the limits of the CRZ. Such additional tree preservation areas shall be platted as such and go with the land. Live trees cannot be removed from such areas without a permit from the Community Development Agency.

Any specimen tree that is removed after being designated for preservation on an approved plan (without the appropriate review and approval of the Community Development Agency) must be replaced by trees with a total density equal to three (3) times the unit value of the tree removed, irrespective of the unit per acre minimum requirement. If a tree is removed without approval and there is no evidence of its condition, size alone will determine whether the tree was of specimen quality.

416.06 ALTERNATIVE COMPLIANCE

The intent of the Tree Preservation and Replacement Ordinance is to insure that a minimum density of trees is maintained on all developed sites. Occasionally, this intent cannot be met because a project site will not bear the required density of trees. To provide some alternatives in such cases, two methods of compliance are acceptable: 1) Planting at a location remote from the project site; or, 2) contributing to the Cobb County Tree Replacement Fund.

The following standards have been established for administering these alternative compliance methods:

- The Community Development Agency must review and approve all requests for alternative compliance. In no instance, shall 100 percent of the required site density factor be met through alternative compliance. As many trees as can reasonably be expected to survive must be planted on the site in question.
- The land disturbance permit will only be issued after the Community Development Agency has approved the request and received the necessary documentation and/or funds.

416.06.01 Off-Site Planting

If trees are to be planted at another location within Cobb County, the following criteria must be observed:

- The off-site location should be in the same area of the county as the project site.
- A tree replacement plan meeting all applicable standards in these guidelines must be reviewed and approved.

- The following note must be shown on the approved plan:

  A tree replacement plan addendum for this project shall be submitted to the Cobb County Community Development Agency at least thirty (30) days from the date of this land disturbance permit. This plan shall include the species, size and
  location of trees to be planted off-site to meet the tree density deficit shown. Release of this project is subject to approval of this plan as well as verification of the installation of the trees.

416.06.02 County Tree Replacement Fund

As another method of alternative compliance, Cobb County will accept donations that will be used for the sole purpose of planting trees on public property.

Calculating Contribution Amounts:

Contribution calculations are based on two (2) inch caliper replacement trees with a value of $220.00, representing the average size and cost of materials, labor and guarantee for trees planted in the Cobb County area.

To determine the appropriate contribution, first calculate the Density Factor Deficit (DFD) or unit value that cannot be planted on the site. Divide the DFD by .5 (the unit value of a 2" caliper replacement tree) and multiply by $220.00.

EXAMPLE: A 2.2 acre site has a required Site Density Factor (SDF) of 33.0, an Existing Density Factor (EDF) of 21.4, and can only accommodate a Replacement Density Factor (RDF) of 9.0.

Determine the Density Factor Deficit (DFD) using the formula:
DFD = SDF - EFD - Approved RDF

In this example, DFD = 33.0 – 21.4 – 9.0 = 2.6

Determine the acceptable contribution amount as follows:
2.6 ÷ .5 X $220.00 = $1,144.00

If replacement trees are required to be larger than two-inch caliper (see Sec. 416.04.02 and Sec. 416.05.02), then the following values will be applied toward the tree replacement fund:

3” caliper tree:	.6 units per tree	$400.00 per tree
4” caliper tree:	.7 units per tree	$800.00 per tree

As an alternative to the above calculations, the tree fund contribution may be based on a signed landscape contract. The average value of all 2-inch caliper trees in the contract can serve as the basis for the contribution amount rather than $220.00. The

contract tree cost must represent the cost of the tree, installation and one-year guarantee. If any of these elements is missing in the contract, the contribution amount cannot be based on the contract. When mitigating 3-inch and 4-inch caliper trees, the average contract amount for three-inch and 4-inch caliper trees can be used respectively to determine the contribution amount in the same fashion as above.

Fund Administration

The Cobb County Tree Replacement Fund will be administered by the Community Development Agency. A quarterly report shall be submitted to the County Manager showing amounts collected, amounts spent, and the types and locations of trees planted. The report will be made available to the Board of Commissioners upon their request.

416.06.03 Parking Lot and Street Yard Requirements

The Cobb County Arborist or Landscape Architect must approve the site lighting plan for parking lots and/or street yards where trees are required to be planted.

If sufficient cause is demonstrated that the parking lot and street yard planting requirements cannot be met, then the plan must show a method of alternative compliance that is equal to or exceeds the minimum requirements.

Sufficient cause is deemed to be when enforcing any of the parking lot or street yard requirements would cause the applicant to violate any state or federal law or any Cobb County ordinance or zoning stipulation specific to the applicant.

416.07 TREE PRESERVATION AND REPLACEMENT PLAN REQUIREMENTS

The tree preservation and/or replacement plan shall be submitted as a separate sheet or as part of other site drawings; provided that all required information is legible. The plans for projects requiring more than 30 units of planted trees (RDF > 30) shall be sealed and signed by a registered landscape architect. A certified arborist or professional engineer may prepare preservation and replacement plans.

416.07.01 Full Land Disturbance Permits

The following information must be shown on the plan:

- All items found on the Erosion and Sedimentation Control submittal checklist pertinent to normal plan review
- Total site area and site area used to determine the Site Density Factor
- The locations of existing and proposed improvements, including structures, paving, driveways, cut and fill areas, detention areas, etc.
- Calculations showing compliance with the required Site Density Factor using existing trees, replacement trees, and/or contributions to the Cobb County Tree Replacement Fund

- A narrative to document any alternative compliance arrangements approved by the County Arborist
- Parking lot analysis showing the number of required and actual parking spaces, the square footage of all parking bays, and the number of required parking lot trees
- Streetyard analysis showing the linear feet of streetyard and the number of required streetyard trees
- Locations of all specimen trees showing each tree's Critical Root Zone and an indication whether the tree is to be removed or preserved
- Locations of all tree protection devices, materials to be used in each area, and details
- Location of any state waters with required buffers
- Location of any buffers required by the zoning ordinance or by a re-zoning stipulation and a planting plan for those buffers
- Location of and details for any permanent tree protection devices such as tree wells, aeration systems, retaining walls, etc.
- Locations of all existing and proposed utility lines or easements
- A plant schedule with columns for the:
  (1) common name, (2) botanical name, (3) quantity, (4) size, (5) individual tree unit value, (6) species unit value, and (7) percent of the species unit value to the total unit value
- The locations of all trees to be planted on the site to meet density requirements
- For trees to be planted in any publicly maintained street right-of-way, show the shoulder section showing placement of trees in relation to the curb and underground utilities
- Additional information as required on a case-by-case basis

The following notes must be shown on the plan:

All Projects

Tree protection devices must be installed and inspected prior to any clearing, grubbing or grading. For projects over two (2) acres, a professional designer must verify that the tree protection fences were installed as shown on the approved plans or in locations that provided better tree preservation potential. Submit this verification prior to the approval of the final plat for residential subdivisions or prior to the issuance of the building permit for commercial projects.

A pre-construction conference is required prior to the issuance of the on-site construction permit. Call the Site Inspections Section at (770) 528-2134 to arrange a meeting at the site.

Tree protection and replacement shall be enforced according to Cobb County standards. Any field adjustments to tree protection device types or locations or

substitutions of plant materials shown on the approved plans are subject to the review and approval of the Cobb County Arborist or County Landscape Architect.

Buffers must be planted to Cobb County Standards where sparsely vegetated or where disturbed for approved utility or access crossings.

Provide 20' minimum spacing between the trunks of all deciduous shade trees. Provide greater spacing where possible.

Provide 20' minimum spacing between the trunks of all deciduous shade trees and any existing or proposed light poles. Provide greater spacing where possible.

Provide 15' minimum spacing between the trunks of all deciduous shade trees and any existing or proposed buildings. Provide greater spacing where possible.

Do not install over-story trees in locations where future conflicts with existing overhead utility lines will be inevitable. Contact the Cobb County Arborist or Landscape Architect if any potential conflicts are identified during the installation process.

The site contractor shall coordinate service routing of all gas, telephone, and electrical lines with the appropriate utility company. All construction must comply with each utility's standards and specifications and not interfere with tree planting sites or existing trees to be preserved.

When digging near trees, the contractor shall prune all exposed roots one (1) inch in diameter and larger on the side of the trench adjacent to the trees. Pruning shall consist of making a clean cut flush with the side of the trench to promote new root growth.

Pruning of tree limbs to provide clearance for equipment and materials shall be done according to standard arboricultural practice (see ANSI A300-1995).

Protect the trunks of any trees being preserved within the temporary or permanent utility easements with strapped-on planking or similar protective device.

The density requirements shown on the Tree Preservation and/or Replacement Plan(s) must be verified prior to the issuance of the Certificate of Occupancy or acceptance of the Final Plat. Call the Development Inspections Division at (770) 528-2124 for an inspection. A performance bond, letter-of-credit or escrow account will be accepted if plant materials must be installed at a later date.

Commercial Projects Only

Parking lot islands, peninsulas and medians must have clean, cultivated soil to a total depth of two and one-half (2½) feet. Native subsoil is acceptable in these areas if the soil is amended with appropriate soil amendments and thoroughly tilled. Otherwise, loamy topsoil is required.

Parking lot islands and medians must be covered with four (4) inches of organic mulch material (replaced periodically). To discourage soil compaction from pedestrian traffic, these areas may be planted with low evergreen shrubs, but not ith grass.

The Cobb County Arborist or Landscape Architect must approve the site lighting plan (as it relates to location of poles only). Light poles are not permitted in parking peninsulas, islands and medians without the prior approval of the County Arborist. 20' minimum spacing is required between the trunk of any proposed over-story hardwood tree (or existing tree counted for tree ordinance credit) and any existing or proposed light pole. If the service provider (electric company) produces a lighting plan, it must adhere to the lighting plan shown in the civil engineering drawings provided by Cobb County for the land disturbance permit. If a lighting plan is not part of the civil drawings, the lighting plan designer must submit a plan to the Arborist/Landscape Architect for review and approval. If site lighting is installed without an approved plan, the Certificate of Occupancy will be withheld until all conflicting power poles are moved.

The installation of the irrigation system or hose bibs (as specified on this plan) will be verified by the County Arborist prior to the release of this project for a Certificate of Occupancy.

All electronic landscape irrigation systems installed after January 1, 2005, must be equipped with a rain sensor shut-off switch in accordance with Georgia HB 1277.

Provide 15' minimum clearance between trees and dumpster enclosures so as to prevent damage from garbage truck lift mechanism.

Parking lot islands, peninsulas and medians must have a minimum width of eight (8) feet from back of curb. Peninsulas must have a minimum depth of 18.5 feet from back of curb.

Position the parking lot trees approximately four feet from all adjacent curb lines to achieve maximum shading effect.

No permanent sign(s), flag pole(s), proposed fire hydrants or power transformers will be placed in conflict with an ordinance coded or approved tree planting location.

Fiscal surety for maintenance of planted trees must be in place prior to the issuance of the certificate of occupancy. A maintenance inspection will be performed prior to the scheduled release date of the posted fiscal surety to determine the health of the trees planted to meet the requirements of this ordinance as well as any buffer plantings.

Subdivisions Only
Tree protection fences for subdivisions shall be installed by the developer at the same time as erosion control devices.

The developer is responsible for maintenance of tree protection fences until building commences on a lot. At that time, the building contractor is responsible for maintenance of the fence on the lot.

The installation of erosion control devices causes harm to trees. On individual lots, use silt fence only as needed and locate it as far from tree protection zones as possible.

416.08 INSPECTIONS

416.08.01 Pre-construction Conference

Prior to the issuance of a construction permit, an inspection will be required to verify correct installation of tree protection devices and to discuss any issues with the contractor concerning tree planting.

416.08.02 Final Inspection

Prior to the release of the certificate of occupancy or final plat approval, an inspection will be performed to assure compliance with the tree preservation and replacement plan. Any required irrigation must be operational at this time. Hose bibs and other watering devices specified on the plans will be verified, and buffer plantings will be inspected.

416.08.03 Maintenance Inspection

Prior to the scheduled release date of the fiscal surety, an inspection will be performed by the County Arborist or Landscape Architect to determine the health of all planted trees.

Any planted materials that are dead, missing or in a state of irreversible decline at the time of that inspection must be replaced by the responsible party named on the surety instrument.

The Community Development Agency shall provide the responsible party with a written evaluation of what trees need to be replaced and the time frame within which replacement is to occur.

Any trees in a reversible state of decline will be noted and subject to monitoring at later dates. If such trees die after the release of the surety instrument, they will become the responsibility of the current owner to replace.

416.09 FISCAL SURETY

Fiscal surety shall be required as specified in Section 50-224 of the Tree Preservation and Replacement Ordinance. The amount of the surety shall be 110 percent of the cost of all required plant materials and the cost of the installation and guarantee of those materials. The surety may be in the form of an escrow agreement, letter of credit or maintenance bond. The surety shall be prepared on forms provided by the Community Development Agency.

The expiration date of the surety instrument shall be determined as 30 months from the date of the final landscape inspection. For all plant materials that will be irrigated by an automated irrigation system, the surety expiration can be reduced to 18 months.

If the original developer sells, transfers, assigns or conveys in any manner all or a portion of the property prior to the expiration date of the surety instrument, the original developer shall maintain the surety instrument until the expiration date. However, if an alternative surety instrument satisfactory to the Community Development Agency is provided by the subsequent owner of the property, the original developer may be partially or totally released from the developer's obligation under the original surety instrument upon receipt of written notification from the Community Development Agency accepting the alternative surety instrument. The alternative surety instrument must satisfy all requirements of the tree preservation ordinance and standards and specifications.

All or part of the surety may be called if the conditions of the County Arborist's or Landscape Architect's maintenance inspection letter are not met.

418 DAMS

418.01 PERMANENT POOL IMPOUNDMENTS

418.01.01 General Criteria

Cobb County Dam Regulations shall apply to all new, rebuilt, or modified stormwater impoundments, including appurtenant works, with the exception of:

- Any Category I Dam requiring permitting under the control of the Georgia Safe Dams Program
- Any dam owned and operated by any department or agency of the United States Government
- Any newly constructed dam financially assisted by the United States Natural Resource Conservation Service or any other department or agency of the United States Government when such department or agency designed or approved plans and supervised construction and maintains a regular program of inspection of the dam; and
- Any dam licensed by the Federal Energy Regulatory Commission or for which a license application is pending with the Federal Energy Regulatory Commission.
- Any dam currently constructed and operating is hereby grandfathered in its present state with the owner assuming all rights, responsibilities, and liabilities thereof. Any existing dam that is modified, other than for maintenance activities, becomes subject to these requirements.

All new dams of 25 vertical feet in height (or greater), impoundments containing a maximum storage volume of at least 100 acre-feet, or dams which have been ruled Category II by the Safe Dams Program shall be designed and constructed according to Category I Spillway Standards, as promulgated by the Safe Dams Program under the direction of a Georgia Licensed Civil Engineer and a Georgia Licensed Geotechnical Engineer, both experienced in the design and construction of dams. All dam heights will be measured from the streambed at the downstream toe to the top of dam.

Prior to construction of any dam over 15 vertical feet or any dam impounding more than 50 acre- feet, the contractor shall provide to Cobb County sufficient documentation of his qualifications to construct dams.

A pre-design meeting shall be held with representatives of the Stormwater Management Division of the Cobb County Water System, to review any proposed dam or proposed dam changes for any dam over 15 vertical feet or impounding more than 50 acre-feet.

Residential structures may not be constructed or re-constructed on any dam.

Depending on the level of downstream risk and size of impoundment, Cobb County may require a dam breach analysis to be submitted for any proposed or existing dam impacting a proposed development, utilizing the National Weather Service's DAMBREAK Program or other methodology approved by the Georgia Safe Dams Program. A DAMBRK analysis will be required for all Category I and II dams. When a dam breach analysis is required by Cobb County, as a minimum a sunny day dam breach analysis shall be performed under full pool conditions.

Guidelines are available from the State of Georgia Safe Dams Program (EPD) to assist the design/ construction professional. Dam design documents shall include, but not be limited to:

- Technical specifications
- Hydrology/hydraulic report
- Geotechnical report (with borrow study applicable)
- Drainage basin map with land use and land improvement parameters
- Existing topography of site

  Dam = Plan view
  = Sections at all critical points
  = Details, complete

- Names and professional seals of design civil engineer and geotechnical engineer with 24-hour contact
- Designated contractor, if available.

Because of the variables associated with selecting spillway(s), outlet device(s) or appurtenant structure(s) to suit a given site condition, the design consultant is responsible for the selection, subject to the review and approval of the Stormwater Maintenance Division. The Division will include in its consideration the ease of maintenance, longevity of the system, blockage potential, and practicality of operations.

No orifice shall be less than 3 inches in diameter unless it is installed to meet a State or local requirement.

All risers (standpipes) shall be equipped with a debris deflector (trash rack) and an anti-vortex device. To facilitate outlet operation, curved or inclined trash racks designed to allow debris to rise with the water level are preferred. In all cases, trash racks shall be either hinged or removable to facilitate maintenance operations. Corrugated metal pipe is not permitted for standpipes.

Spillways: Every dam shall be provided with a principal spillway, fully capable of passing at least the 50-year flood, with excess spillway capacity provided by the emergency spillway(s) capable of handling excess flows up to the design storm. The principal spillway can be sized for floods of less magnitude than the 50-year flood only if the emergency spillway is appropriately armored against scour with concrete or other suitable lining as protection against more frequent usage.

Principal Spillway: All spillways shall be analyzed (hydraulically rated) for both inlet and outlet control conditions using appropriate tailwater ratings. If a control-box or

weir-box is affixed, then the total system (inlet control box and outlet conduit) shall be hydraulically rated to determine the stage-discharge relationship.

Emergency Spillway(s): For every type of water impounding facility, a planned safe flow path must be provided for conveyance of flows of water in an emergency. In many instances, this function can be provided through installation of an emergency spillway. Emergency spillways may be excavated open channels, either vegetated or paved with reinforced concrete, weir sections of concrete walls, or appropriately designed conduit.

Any portion of an open channel spillway excavated into a dam embankment or other fill section must be paved with reinforced concrete equipped with appropriate seepage controls, underdrainage, and cut-off walls.

Any portion of any spillway excavated into undisturbed residual soil shall be vegetated in accordance with the practices described in the "Manual for Erosion and Sediment Control in Georgia" or protected against scour and erosion by other suitable measures if vegetation does not provide adequate stabilization. If the spillway is activated by storms smaller than the 50-year frequency, then vegetation alone will not be considered sufficient protection against scour according to these standards.

A 12 foot combined drainage and permanent access easement shall be established around the pond at the 100 year pool level or at the elevation of top of dam, whichever is greater to provide access and permanently prevent usage or modification of this flood storage area. A 12 foot combined easement shall also be provided along the toe of the dam. A 20-foot access easement from the public right of way shall be provided.

Emergency Draining of the Lake:
Upon obtaining evidence which indicates that a potentially hazardous condition may exist, such as:

- Excessive leakage transporting soil from the dam interior (i.e., piping);
- Slope failure, excessive scouring, or other apparent soil instability;
- Longitudinal cracks, bulging, or shifts in alignment;
- Excessive sloughing or seepage; or
- Failure of the spillways and/or outlet devices to function properly (due to cloggage, damage, or other deficiency).

The County Manager has the authority to order the immediate and complete draining of the lake in whatever manner deemed necessary at the time and to require the owner to keep the pool down until remedial work, as is deemed most appropriate to create a safe dam condition, is completed and approved by the Stormwater Management Division.

All lakes shall have a permanent lake drain.

No public roadways shall be constructed over any permanent water impoundment structure. Private roadways and driveways over any permanent impoundment structure (including full indemnification to the County) shall be reviewed on a case-by-case basis by the County Manager (access for public safety vehicles must be addressed in said indemnification).

No utilities are permitted to pass through any dam, either longitudinally or transversely, unless approved by Cobb County Stormwater Management Division.

418.01.02 Specific Criteria
(Dams with vertical heights less than or equal to 6 feet.)

Earthen Dams:

Any earthfill dam equal to or less than 6 feet in height is an exempt structure according to Georgia Safe Dams Act. The following minimum design criteria shall apply:

- Design shall be by a professional engineer registered and licensed to practice engineering in the State of Georgia;
- Plans shall be submitted to Cobb County Stormwater Management Division for review and comment;
- Construction shall be performed by a qualified contractor who has sufficient skills and experience to perform this work;
- Design storm shall be at least SCS 24-hour 100-year event or equivalent approved by the Stormwater Management Division;
- A minimum freeboard of two feet is required from the design flood pool to the top of the dam;
- All soil shall be CL or ML material, compacted to 95% standard proctor; and
- Side slopes shall be no steeper than 3:1 unless approved by Cobb County Stormwater Management Division. Under no circumstance shall the slope exceed 2:1.

Reinforced concrete or masonry dam:

Design and construction supervision must be performed by civil engineer licensed to practice in the State of Georgia. Construction verification checklist to be submitted to Stormwater Management Division;

Design shall address and account for overturning, sliding uplift, and seepage with adequate safety factor (2.0 for over-turning, 1.5 for sliding) and adequate freeboard (0.5 feet above 100 year pool). Steel design shall conform to American Concrete Institute Code. Uplift loads can be reduced by 70%, if an underdraining system is provided. Construction verification checklist must be provided by design engineer or

approved alternate. Design storm shall be at least SCS 24-hour 100-year event or equivalent approved Stormwater Management Division.

(Dams with vertical heights between 6 and 25 feet with less than 100 acre-feet of storage)

Earthen Dam:

Design, construction supervision, and certification of completion according to plans and specifications to be by civil engineer and a geotechnical engineer both licensed to practice in the State of Georgia.

Design shall conform to the requirements of a Category I Spillway Standards Dam as classified by the Georgia Safe Dams Office and as published in "Georgia Safe Dams Act and Rules for Dam Safety", Act No. 796, as amended to date.

Design storm shall be at least 25% of the Probable Maximum Precipitation (6 hour) storm event.

Principal spillway shall be adequate to handle at least the 50-year flood.

Emergency spillway(s) as a minimum shall be adequate to handle flows in excess of the 50- year flood, up to the ¼ PMP.

Front and back slopes shall not be steeper than 3:1 unless design includes a slope stability analysis, which confirms and documents that a steeper slope will be stable. In no condition, however, will a slope steeper than 2:1 be permitted.

All organics and topsoil shall be removed from the entire footprint of the dam and the foundation certified by a geotechnical engineer (PE).

Earthen fill shall be CL or ML material approved for use by geotechnical engineer (PE), placed, and compacted to not less than 95% standard proctor under said engineer's direction.

Compaction records accompanied by a geotechnical engineer's certification that soil compaction meets this specification should be forwarded to the Cobb County Stormwater Management Division.

The low-level outlet (lake drain) shall be concrete pressure pipe or ductile iron pressure pipe, cradled in concrete. Bedding shall be in concrete poured the full width of the exposed trench and as a minimum, up to the spring line of the pipe. Pipe and joints shall be rated for internal pressures exceeding that of the design storm and shall meet or exceed ASTM 361 or AWWA C-301. Corrugated metal pipe is not allowed.

A lake drain may also be comprised of a valve-operated siphon system designed by a registered civil engineer licensed in the State of Georgia. Piping for a siphon system shall be schedule 80 PVC in conformance with current state standards or ductile iron with mechanical joints or PV joints with adequate strength and anchoring to sustain the water forces incumbent with operation.

Freeboard of a dam, above the design storm maximum pool, shall be 3.0 feet in lieu of fetch calculations of wave height justifying a lesser freeboard. Cobb County reserves the right to require additional freeboard above the nominal 3-feet requirement, if supported by fetch calculations.

Crest width shall be not less than 12.0 feet.

Reinforced Concrete or Masonry Dam:

Design, construction supervision, and certification of completion according to plans and specifications to be by design civil engineer and a geotechnical engineer both licensed to practice in the State of Georgia.

Design shall address and account for overturning, uplift, and seepage with adequate safety factory and adequate freeboard.

All slab on grade concrete, including concrete footings, shall be designed and constructed to control seepage and piping of foundation soil along the underside of the slab in incorporating cutoff walls or other appropriate measures.

Design storm shall be as specified by the Cobb County Stormwater Division. Generally, at least 25% of the Probable Maximum Precipitation 6-hour storm event (¼ PMP) is required.

Principal spillway shall be adequate to handle at least the 50-year flood unless the emergency spillway is appropriately armored against scouring.

Emergency spillway shall be adequate to handle flows in excess of the 50-year flood, up to the 6-hour PMP.

Freeboard of a dam, above the design storm maximum pool, shall be 3.0 feet in lieu of fetch calculations of wave height justifying a lesser freeboard. Additional freeboard above the nominal 3 feet required, if supported by fetch calculations.

Design shall conform to the requirements of a Category I Spillway Standards Dam as classified by the Georgia Safe Dams Office and as published in "Georgia Safe Dams Act and Rules for Dam Safety", Act No. 796, as amended to date.
All organics and topsoil shall be removed from the entire footprint of the dam and the foundation certified by a geotechnical engineer (PE).

Earthen fill (if any) shall be subject to the criteria specified above for earthen embankments.

Required 28 day compressive strength for concrete is 3000 psi.

418.02 TEMPORARY POOL IMPOUNDMENTS

Normally dry stormwater storage basins - impound stormwater temporarily, i.e., dry detention ponds.

418.02.01 General Criteria

Design to be by registered civil engineer licensed to practice in the State of Georgia.

Detention pond dams equal to or greater than 15 feet in height or greater than 50 acre feet of storage must conform to the corresponding design criteria for permanent impoundments, as referenced above.

(The following criteria apply to dry detention pond dams less than 15 feet high and less than 50 acre feet).

Design storm shall be at least the 100-year storm.

Multi-frequency outflow control shall be provided for the 2-year, 5-year, 10-year, 25-year, 50-year, and 100-year frequency storms per the current Cobb County Stormwater Management Ordinance.

Principal spillway shall be adequate to handle at least the 25-year flood.

Emergency spillway(s) shall be provided to handle flows in excess of the 25-year flood, up to the 100-year flood.

No orifice shall be less than 3 inches in diameter unless it is installed to meet a State or local requirement.

Install fencing around all ponds deeper than 6 feet as measured vertically from the crest of the dam down to the invert of the pond, or around all ponds deeper than 4-vertical feet in cases where walls are utilized to create the detention pond. Gates are to be at least 12 feet wide to permit access for maintenance equipment. Cobb County is not responsible for the replacing of any non-permitted structures or plantings destroyed, removed, or otherwise damaged during maintenance operations. Fencing shall not be installed across spillways or drainage ways.

A 12 foot combined drainage and permanent access easement shall be established around the pond at the 100 year pool level or at the elevation of top of dam, whichever is greater to provide access and permanently prevent usage or

modification of this flood storage area. A 12 foot combined easement shall also be provided along the toe of the dam. A 20-foot access easement from the public right of way shall be provided.

418.02.02 Specific Criteria

Earthen Dam:

Front slope shall not be steeper than 2.5:1 unless design includes a slope stability analysis, which confirms and documents that a steeper slope will be stable. In no condition, however, can any slope be steeper than 2:1.

All organics and topsoil shall be removed from the entire footprint of the dam and the foundation inspected and approved by the geotechnical licensed, qualified engineer prior to fill placement.

Earthen fill shall be CL or ML material approved for use by a geotechnical engineer (PE) and placed and compacted to not less than 95% Standard Proctor under said engineer's direction.

Freeboard of a dam, above the 100-year design storm maximum pool, shall be 2.0 feet in lieu of fetch calculations of wave height justifying a lesser freeboard. Cobb County reserves the right to require additional freeboard above the nominal two feet requirement, if supported by fetch calculations.

Crest width shall be not less than 12.0 feet, unless approved by the Stormwater Division.

Proprietary design products may be considered on a case by case basis.

Reinforced Concrete or Masonry Dams:

Design shall address and account for overturning, uplift, and seepage with adequate safety factor (2.0 for overturning, 1.5 for sliding) and adequate freeboard (0.5 feet above 100 year). Steel design shall conform to American Concrete Institute Code. Uplift loads can be reduced by 70%, if an underdraining system is provided. Construction verification checklist must be provided by design engineer or approved alternate.

All slab on grade concrete, including concrete footings, shall be designed and constructed to incorporate appropriate cutoff walls.

In no condition can any fill slope (if any) be steeper than 2:1.

All organics and topsoil shall be removed from the entire footprint of the dam and the foundation inspected and approved by the Cobb County Stormwater Division prior to gravity dam concrete or masonry placement.

Earthen fill (if required) shall be approved for use by a geotechnical engineer (PE) and placed and compacted to not less than 95% Standard Proctor under said engineer's direction.

Freeboard of a dam, above the 100-year design storm maximum pool, shall be 2.0 feet along any earthfill sections of the dam, in lieu of fetch calculations of wave height justifying a lesser freeboard. Cobb County reserves the right to require additional freeboard above the nominal two feet requirement, if supported by fetch calculations. Freeboard for the concrete section of the dam shall be a minimum of 0.5 feet.

Required 28 day compressive strength for concrete is 3000 psi.

419 HISTORIC PROPERTIES

These general design guidelines shall serve as preliminary design standards for the designated "Historic Districts" in Cobb County, Georgia. They provide a set of criteria to be applied uniformly in the evaluation of appropriateness of proposed changes in these historic districts. The goal of the design guidelines is to protect the visual quality of local historic districts and landmarks, preserve historic values, and encourage compatible new construction. From time to time, more specific guidelines may be written to more closely relate to the characteristics of individual districts, but in all cases these general guidelines shall serve as the underlying policies for those more detailed documents.

419.01 SITE DESIGN

The following guidelines apply to all renovations, rehabilitations, additions, and new construction work within designated "Historic Districts" in Cobb County, Georgia.

419.01.01 Setbacks/Siting

Maintain and respect the pattern and alignment of the buildings established by the traditional setback of other buildings on the street.

419.01.02 Orientation

Buildings should repeat the orientation of other buildings on the street when possible. Similar orientation characteristics are:

- The direction of roof lines
- The height and form of adjacent roofs
- The positioning of features such as porches or garages
- The manner in which one enters the building

419.01.03 Form/Massing/Height

Buildings should conform to existing precedent in terms of their general form, massing, and height. Roof shapes are particularly important and should be repeated for new buildings when possible.

419.01.04 Landscaping/Plant Beds

Consider historic precedents in all landscaping plans or simple plant beds. This consideration applies in several levels:

- Remnants of earlier landscaping practices and tastes (i.e., planting unusual specimen)
- Recreating gardening practices
- Consideration of plant varieties and practices that represent a continuity with the past

419.01.05 Fences

Maintain traditional fence lines where they once existed and preserve historic fences in their original locations.

419.01.06 Paving

Where historic paving material exists in the designated district, consider using similar materials for new paving; preserve historic paving materials in their original location.

419.01.07 Parking Lots

Properly screen or otherwise visually reduce the impact of parking lots and multiple parking spaces:

- Side or rear locations preferred
- Means of screening include, but are not limited to:
- Islands of hedges, shrubs, or trees;
- Fences of wood, pickets, or vertical planks.

419.01.08 Signs

Signs should be small, unobtrusive, and subordinate to the architecture and overall character throughout the district.

- Generally, more prominent signs should be placed in front yards or on walkways near the building entrance so as not to impinge upon the buildings themselves.
- Movable and/or portable signs are strictly prohibited from any designated district.
- Locate flush signs so they do not extend beyond the outer edges of the building always avoiding obscuring ornament and detail.
- Where several businesses share a building, coordinate the several signs to align or group into a single panel or row and use similar forms and backgrounds for the signs to visually give uniform effect.
- Sign materials should be compatible with building materials.

419.02 REHABILITATION OF CONTRIBUTING STRUCTURES

The following guidelines apply to the rehabilitation of contributing structures in Historic Districts.

419.02.01 General Preservation Policy

The preservation of characteristic-defining elements of historic buildings is a top priority. Alterations and repairs should accurately represent the historic qualities of the buildings. Original documentation should be used for restoration work whenever possible. Where original documentation is not available, interpretations of similar elements that occurred in the area may be considered.

419.02.02 Establishing the Proper Approach

The primary objectives of a rehabilitation plan should be:

- Retention of distinguishing features: The preservation of significant or character defining architectural materials and features of the building; and
- Avoidance of imitative historic features for which there is no historic basis.

419.02.03 Determining the Contents of an Appropriate Rehabilitation Plan

An appropriate plan should contain the following strategies:

- Protection and maintenance of historic features that survive in generally good condition.
- Repair historic materials and features that are deteriorated.

Replacement of historic materials and features with new materials where deterioration is so advanced that repair is impossible.

A plan **may** also include strategies for:

- Alterations to the exterior of the historic building.
- Additions of new rooms or spaces to the exterior/interior of the historic building.

419.02.04 Design Character

Respect the original design character of the building. Analyze the building to determine which elements are essential to its character. Please do not attempt to make the building appear older (or younger) in style than it really is. The genuine heritage of the District should be expressed.

419.02.05 Change in Use

New uses that require the least change to existing structures are encouraged. Every reasonable effort should be made to provide a compatible use for the building that will require minimal alteration to the building and its site.

419.02.06 Repairing Original Features

Avoid removing or altering any historic material or crafted elements that have significant architectural features. Avoid character altering repair or maintenance measures. Examples of historically significant architectural features are porches, window trim, chimneys, overall building form, roof, building shape, or material finish. Instead of replacing make an attempt to patch, repair, piece in, splice, consolidate, or otherwise upgrade the existing material using recognized preservation methods whenever possible.

419.02.07 Protect and Maintain Existing Significant Stylistic Elements

Protection includes the maintenance, historical material through treatments such as rust removal, caulking, repainting, cleaning, resetting and puttying nail holes. Use approved procedures for cleaning, refinishing, and repairing historical materials.

419.02.08 Replacement

When replacement is absolutely necessary, match the original material when feasible. A substitute material is acceptable if the form, design, color, or texture of the substitute conveys the appearance of the original and substantiated by physical or pictorial evidence. When reconstruction of an element is impossible due to the lack of historical evidence, then use a design that relates to the building in size, scale, and material.

419.02.09 Alterations

Preserve older alterations that have achieved historic significance in itself and are character defining. The alteration to the building must be assessed in terms of its contribution to the overall character and appearance of the building.

More recent alterations that are not historically significant may be removed.

419.02.10 Cleaning Methods

Harsh cleaning methods for wood and masonry are discouraged. Avoid sandblasting, steam cleaning, detergents, chemicals, and organic solvents. Be aware of minimizing irreversible damage to historic buildings.

419.02.11 Roofing Repairs

Roofs are one of the most frequently replaced and repaired building components. Generally, it is recommended that roofs be replaced "in-kind" or that an appropriate roofing material be selected. Metal roofs are subject to rusting and deterioration.

419.02.12 Understanding and Preserving Historic Resources

The following six questions are intended to aid owners and developers in better understanding their buildings and the areas surrounding them in order to encourage informed and more conscientious decisions regarding treatment, renovation, additions, and rehabilitation:

1. How is the existing building used?

2. How old is the building?

3. Is the building contributing, non-historic, or intrusive?

4. What is the building type and style?

5. Does the building have distinguishing characteristics or features as in?

Orientation	Plan or blueprint
Roof form and shape	Dormer and other roof features
Porches and store fronts	Foundations
Bay divisions	Number of stories
Chimney	Materials and secondary features
Landscape/site features	Window and door shapes and locations
Outbuildings	Fences

6. Can I identify any threats to historic integrity?

Inappropriate additions	Artificial siding
Sandblasting/poor painting	Inappropriate stucco
Inappropriate windows	Inappropriate entrance doors
Alterations to store fronts	Storm windows and doors
Inappropriate porch treatments	Inappropriate foundation treatments
Inappropriate shutters	Inappropriate steps
Inappropriate landscape	Metal awnings
Poor maintenance practices	

419.03 ADDITIONS TO CONTRIBUTING STRUCTURES

The following guidelines apply to additions to contributing structures in the "Historic Districts".

419.03.01 Compatible Relationship to Main Building

Additions to existing buildings should be compatible with the size, scale, color, and character of the main building and its environment and should almost always be placed in the rear or side away from public view of the main building. Try not to copy other parts of your historic structure, but do consider existing features such as form, roof pitch, and door and window arrangement. Efforts should be made to visually tie and align the addition to the existing building.

419.03.02 Design

Additions should complement the historic period of the district. Alterations that seek to imply an earlier period of inaccurate variation on the historic style than that of the building are inappropriate.

419.03.03 Materials
Use materials that are compatible with the original building.

419.03.04 Reversibility
New additions and alterations should be made so that the original fabric of the structure is unaltered. Original exterior walls should be retained when possible and new framing systems should not interrupt original surfaces. Upon cleaning, ensure that no irreparable damage is done to historic buildings.

419.03.05 Preserving Features
Preserve all existing historic features of a building.

419.03.06 Roofing Shape
The roof shape of the original building can often provide a point of departure for new additions. Generally, low-pitched roof additions would not be preferred for buildings with a conspicuously pitched roof or roofs.

NOTE: In the event that these guidelines fail in any respect to address a landowner's or developer's inquiry, the ultimate decision-making guideline is whether the consequences of the decision will serve to preserve and to protect the historic values of the district and the visual quality of the surrounding area.

420 CEMETERIES

In the event a cemetery or burial site is located on the property, the developer is required to adhere to the following:

- Prepare a site plan identifying the full boundaries with a metes and bounds description.
- Provide a fifty (50) foot natural undisturbed natural buffer from the common property line; or a 50 foot undisturbed natural buffer around the perimeter of the outermost burials of the cemetery; whichever provides the greatest protection for the cemetery. The outermost burials to be determined by a professional archaeologist Cobb County Code 26-29 Section C. The archaeology survey will locate all grave shafts and define the burial boundary as well as the fence line. Member(s) of the Cemetery Preservation Commission (or approved staff member appointed by Community Development Director) must be present during archeology survey.
- Lots adjacent to fifty (50) foot undisturbed natural buffer shall have some or the entire required setback in addition to the buffer.
- The fifty (50) foot undisturbed natural buffer shall be recorded as a conservation easement with the Cobb County Cemetery Preservation Commission having third party right of enforcement.

- Provide uninhibited daylight access to the cemetery via a twenty (20) foot graveled easement to the cemetery from the nearest public road. The outer boundaries of this easement may be landscaped.
- A plat to be prepared by a registered surveyor denoting the location of all grave shafts, the fifty (50) undisturbed buffer, the fence line as determined by the archaeology survey and the access easement.
- The archeology survey and plat must be submitted to the Cobb County Cemetery Preservation Commission three (3) business days prior to any zoning hearing or plan review, as may apply.
- Provide and install an orange protective fence on the outer perimeter of the fifty (50) undisturbed natural buffer before beginning construction. This fence shall be maintained throughout the life of the project. At completion of the project, the orange protective fence shall be removed from the premises. A sign stating Cemetery Preservation Buffer– Do Not Disturb shall be erected at fifty (50) foot intervals along the outer perimeter of the buffer. At the completion of the project, these signs may be maintained or replaced by the Cobb County Cemetery Preservation Commission.
- Provide at least a permanent six (6) foot chain link fence with gate on the fence line determined by the archaeology survey or on the common property line between the cemetery and the development whichever provides the greater protection for the cemetery before beginning construction.
- Fence must be 9 gauge with top rail and fence post must be set in concrete. Fence may be upgraded to vinyl coated chain link and/or wrought iron.
- Comply with State and local laws and ordinances.
- All cemetery preservation requirements must be Site Plan specific.

421 SWIMMING POOL REQUIREMENTS

All Swimming Pools with a depth of more than 24 inches shall comply with Appendix G, Swimming Pools, Spas and Hot Tubs, of the International Residential Code or Chapter 31 of the International Building Code.

All swimming pools shall be completely enclosed by a barrier of at least four feet in height.

The enclosure shall be equipped with self-closing and self-latching gates.

This section is to notify you of the above barrier requirements; it is your responsibility to see that a barrier is installed prior to filling the pool and that other swimming pool code requirements are met. To meet these standards; shrubs; bushes; hedges; trees; etc., are not considered an effective barrier. A substantial fence or wall is required.

After the barrier is installed, you must call for a final inspection.

422 UTILITIES

GENERAL NOTE:
Cobb County has adopted the Georgia Department of Transportation, Utility Accommodation Policy and Standards, Section 3- Rules for Issuing Permits (as may be amended from time to time). Please see Volume 2, Section 508, Materials Specifications and Standard Details.

For damage prevention purposes, all utility locations within a street right-of-way shall correspond to the utility location cross section in Standard Details 80, 80a, 80b, 81, 81a and 82.

On residential streets constructed without curb and gutter, the utility depths shall be increased by one foot to allow for the realignment of the ditches without damaging the utilities. The developer is encouraged to coordinate with the Cobb County Utility Coordinating Committee.

Southern Bell requests to be moved from 18" BOC (back of curb) to 7½' BOC and from 24" deep to 30" deep to accommodate the gas service crossings.

CATV requests to be moved from 5" BOC to 12" BOC and from 18" deep to 24" deep.

Power requests to be moved from 8' BOC to 9' BOC with power transformer being flush with back of the right-of-way.

Gas requests to remain at 36" BOC and 30" deep and will raise service laterals from 30" deep to 24" deep.

Water requests to remain at 5' BOC and 42" deep.

Utility companies may utilize a joint trench for utility installation. If a joint trench is used, its depth shall be that of the utility in the trench required to place its lines at the greatest depth. Joint trench placement may be specified or random placements.

All contractors, developers, utility companies, and the "general digging public" are encouraged to abide by the OCGA 9 (25). The UPC number is (404) 623-4344; (800) 282-7411.

All privately owned equipment or utilities, with the exception of residential mailboxes, shall be allowed on public right-of-way by special permit only. A special permit must be approved by the Directors of Cobb County Community Development, Department of Transportation and Water System.

Any utility installed on the County right-of-way under special permit shall be equipped with a tracing or locating mechanism. As an example, any non-conductive conduit

shall be equipped with a minimum size 16 gauge corrosion-resistant tracer wire to aid in locating the utility. The wire shall extend along the tributary conduit to a point four feet off of the right-of-way.

Water and sewer service lateral locations are to be permanently marked on the curb under which they cross.

Any contractor operating within the County shall sign a statement to acknowledge receipt of this new regulation as a condition of obtaining a business license to operate within Cobb County. Contractors shall provide a 24-hour contact telephone number to the Georgia UPC.

Responsibility for the location of any utility placed on the County right-of-way under special permit rests solely upon the owner of the utility. Any damage repair to non-permitted utilities shall be the responsibility of the owner of the utility.

The design and construction specifications for all-public water and sanitary sewer facilities shall conform to the specifications of the Cobb County Water System or applicable authority, i.e., water meters should back-up to the property line.

Storm drains and cul-de-sacs shall off-set the right-of-way to accommodate utilities. See Standard Details 80 and 81.

All streetlights shall be placed at the property line.

The standard color codes adopted by the American Public Works Association and the Georgia Utilities Coordinating Committee shall be utilized for any necessary marking of underground utility lines. The color scheme is as follows:

- Red Electric
- Yellow Gas/Oil
- Orange Communications/Cable TV
- Blue Water
- Green Sewer
- White Proposed Excavations
- Pink Surveyors

All utility manholes and valve boxes shall be brought to the finished grade within the roadway section. Manhole covers and splice boxes placed within the sidewalk zone shall be constructed to be flush mounted with the finished sidewalk.

Utility poles and transformers shall be located as near as possible to the frontage line. Wherever practical, utility poles or transformers shall not be located on the same lot corner as water service.

423 CONDOMINIUMS

423.01 PROJECT DESIGN

Design of project shall conform to the requirements of the Cobb County zoning regulations and to the standard design specifications.

423.02 MONUMENTS

Permanent bench markers shall be placed at all land lot corners on the boundary of the property being developed. These markers are to be concrete with brass markings. Placement (to be verified by visual inspections) to extend no less than 6 inches above the finished grade.

NOTE: Set as witness to existing pins.

All other corners shall be marked with an iron pin, ½-inch diameter, 24 inches long, and driven to extend no less than one inch above the finished grade.

423.03 EASEMENTS

Easements shall be cleaned and opened at the time of development to control surface water run-offs. Run-off slope and side slopes are to be specified by the developer's engineer, according to good engineering practice.

Permanent sanitary sewer easements of 20 feet in width shall be provided for necessary lines.

Buildings shall not be located closer than 10 feet from the edge of any permanent sanitary sewer easement without approval from the Cobb County Water System.

Easements for sanitary sewers and drainage purposes shall not overlap unless approved by the Cobb County Water System.

Drainage easements shall be provided where the project is traversed by a watercourse, drainage way, natural stream, or channel. Easements shall conform substantially to the limits of such watercourse plus any additional width as is necessary to accommodate future construction as recommended by the Stormwater Division.

Drainage easements within the project and off the dedicated street right-of-way shall be clearly defined on the final plat of the project. The owner of this property shall be required to keep the easement open and free of undue obstructions at all times.

All easements shall be cleared of debris, excess dirt, and other materials. The ground shall be smoothed down and grassed within 10 days of completing construction work.

The use of sediment control measures may be required to protect the area until a vegetative cover is obtained.

423.04 STREET NAMES

All street names are subject to the approval of the Community Development Agency and shall be done in accordance with Section 401.19.

423.05 PROPERTY ADDRESS

Property address numbers shall be provided by the Community Development Agency.

423.06 SIDEWALKS

Sidewalks of an approved design shall be required per the Sidewalk Ordinance – Chapter 106 of the Cobb County Code.

423.07 SUITABILITY OF LAND

Such land deemed unsuitable for residential purposes may be set aside for such uses that shall not be harmed by the existing condition of the land. (See Cobb County floodplain regulations.)

423.08 UTILITIES

The design and construction specifications for all public utilities shall conform to the standard design specifications for Cobb County.

423.09 VARIANCES

Where the sub-divider can show that a provision of the regulations would cause unnecessary hardship if strictly adhered to and/or where, because of topographical or other conditions peculiar to the site, and/or where, in the opinion of the Board of Zoning Appeals a departure may be made without adversely affecting applicable County regulation, the Board of Zoning appeals' decision for authorization shall be noted on the final plat before approval of the plat.

423.10 ZONING OR OTHER REGULATIONS

No final plat affected by an existing zoning ordinance shall be approved unless it conforms to such ordinance. Whenever there is a discrepancy between minimum standards of dimensions noted in these regulations and those contained in the zoning regulations, building code, or any other official regulation in Cobb County, the highest standard shall apply.

424 GATED COMMUNITIES

Gated communities must be developed in accordance with the following minimum requirements:

All private roads must be designed and constructed according to Cobb County Development Standards 401 and 402.

Gates must be set back a minimum of 50 feet from public right-of-way. Minimum gate width must equal the required road width plus the width of any utility easements present, but in no case shall the width be less than 30 feet (including 14 feet of clearance width), provided, however, that the required gate width may be accomplished through the combination of adjacent entrance and exit gates of equal width.

Gate width and placement must be reviewed by, and are subject to approval by, both the Public Safety Agency (including Fire Marshall's Office) and Department of Transportation.

Gates can be "manned" 24 hours a day, seven days a week, or electronically operated in a manner acceptable to Cobb County Public Safety.

Arrangements for access through the gate for emergency service vehicles must be reviewed by, and are subject to approval by Cobb County Public Safety (including Fire Marshall's Office). Emergency service vehicles include, but are not limited to, fire suppression equipment, medical emergency vehicles, and law enforcement vehicles. Access arrangements must be approved by Cobb County.

Arrangements for access through the gate for non-emergency service vehicles must be reviewed by, and are subject to approval by, the Cobb County Water System and the Cobb County Community Development Agency. Non-emergency public service vehicles include, but are not limited to, mail delivery, garbage pickup, public utility meter reading, and public utility maintenance. Necessary arrangements may include, but are not limited to: access easements for refuse collection vehicles and appropriate utility easements for public utility development and maintenance.

Gates may not restrict access to any public right-of-way or publicly owned property within the proposed development.

The County must be properly indemnified against any liability resulting from the proposed development including damage from or broken utilities, fines associated with damaged or broken utilities. This indemnification shall be evidenced by:

- The Release and Indemnity Agreement placed on the plat.
- A separate release and indemnity agreement executed by the developer.
- A clause in each deed of conveyance by the developer for each lot in the subdivision acknowledging the release and indemnity agreement.
- Assumption of liability of the release and indemnity agreement by the Homeowners' Association.
- Assumption of liability of the release and indemnity agreement in the Protective Covenants, which shall become part of the covenants of the subdivision. The developer's liability shall end three years after the last lot

has been sold by the developer, provided that there are then no pending or threatened claims against the developer, the County or the Homeowners' Association. All language for liability agreements and covenants shall read as required by the Cobb County Attorney's Office.

- The developer shall grant such easements to the appropriate governing authority or Utility Company as is necessary for public purposes regarding said community.
- Cobb County will consider public ownership and/or reading of individual single family residential water meters within a gated community or along a private roadway on a case by case basis, subject to proper access being provided.
- In the event that the developer does not obtain any approval required hereunder, same shall not alleviate the requirement of obtaining such approval.
- Via a written Memorandum of Agreement in a form satisfactory to the County Attorney, and compliance by the developer with the requirements of O.C.G.A. 40-6-3 (a) (6) as it may be amended from time to time, the developer, for itself and its successors in title, shall grant Cobb County the authority to enforce all local ordinances and state laws, including the state Uniform Rules of the Road and necessary and required easements, within the gated community.

The following standards shall be used by Cobb County when considering any request for gated communities:

- The number of units in the development shall not be excessive as identified on the Future Land Use Map of the Cobb County Comprehensive Plan.
- The developer must demonstrate adequate provision for perpetual maintenance of the private road and any other infrastructure associated with the development, including but not limited to a note on the plat and a clause in each deed of conveyance by the developer for each lot in the subdivision acknowledging the perpetual maintenance of the private road (and other private infrastructure) by the Homeowners' Association.
- The developer must demonstrate an adequate strategy for necessary emergency access.
- The private road and gate must not unreasonably impede the logical future development of public roads in the vicinity of the project.
- The private road and gate must not unreasonably restrict public access to sites of cultural, historical, or natural significance.
- The private road and gate must not unreasonably restrict previously established pedestrian access.
- The establishment of gated communities must not have unreasonable negative effects on the health and welfare of the community or the good order of the County.

425 TRADITIONAL NEIGHBORHOOD DEVELOPMENT DESIGN GUIDELINES

Neither the Administrative Review Criteria nor any other portions of these Guidelines are intended to authorize, regulate or prescribe land uses or to supersede development regulations. These criteria provide a tool to Cobb County personnel for reviewing Traditional Neighborhood Developments and Mixed-use Villages that fall within the definition and intent of these Guidelines. If the intent of the project is to request that the roadways within the development be accepted by Cobb County, coordination between the developer and Cobb County is strongly encouraged during the review and approval process.

425.01 CONCEPTUAL MASTER PLAN REQUIRED

Prior to submitting for plan review or any type of permits, all Traditional Neighborhood Developments and Mixed-use Villages will require a conceptual plan approval including but not limited to: common parking areas to accommodate neighborhood parties (eliminating potential for blocking emergency vehicle access along residential streets), management plan demonstrating how construction will be phased (so to avoid potential for conflicting construction and emergency vehicle traffic and parking – said management plan may include temporary waiver of curbing to allow vehicular passage), how service and utility vehicles (including delivery trucks, sanitation trucks, etc.) will maneuver through the development (including potential centralized “drop off points”), how interconnection will be established between the mixture of uses (with an emphasis on the “core” use, how private alley ways will be maintained by the community association), etc.

425.02 TND DEFINED

A Traditional Neighborhood Development (TND) is a human scale, walkable community with moderate to high residential densities and a mixed-use core. Compared with conventional suburban developments, TNDs have a higher potential to increase modal split by encouraging and accommodating alternate transportation modes. TNDs also have a higher potential for capturing internal trips, thus reducing vehicle miles traveled.

A dense network of narrow streets with reduced curb radii is fundamental to TND design. This network serves to both slow and disperse vehicular traffic and provide a pedestrian friendly atmosphere. Such alternate guidelines are encouraged by Cobb County when the overall design ensures that non-vehicular travel is to be afforded every practical accommodation that does not adversely affect safety considerations. The overall function, comfort and safety of a multi-purpose or “shared” street are more important than its vehicular efficiency alone.

TNDs have a high proportion of interconnected streets, sidewalks and paths. Streets and rights-of way are shared between vehicles (moving and parked), bicycles and

pedestrians. The dense network of TND streets functions in an interdependent manner, providing continuous routes that enhance non-vehicular travel. Most TND streets are designed to minimize through traffic by the design of the street and the location of land uses. Streets are designed to only be as wide as needed to accommodate the usual vehicular mix for that street while providing adequate access for moving vans, garbage trucks, fire engines and school buses.

425.03 MIXED-USE VILLAGE DEFINED

A Mixed-use Village is a tightly clustered mix of retail with office space, services, residential uses, and/or community gathering spaces. The residential uses usually contain a mixture of types that can include multifamily condominiums, townhomes, and single-family homes.

Urban design is a vital component of making Mixed-use Villages successful, and this includes site and layout of buildings, façade treatments, traffic calming, decorative streetscaping, and open space. All of these should be connected with the idea of creating a pedestrian-friendly and aesthetically-pleasing environment.

425.04 INTENT

That the developments encourage walking and biking, enhance transit service opportunities, and improve traffic safety through promoting low speed, cautious driving while fully accommodating the needs of pedestrians and bicyclists.

That such developments should have the potential to reduce the number of external vehicle trips, and thus vehicle miles traveled, by 15% or more through provision of commercial, recreational and other resident-oriented destinations within a walkable community. That traffic impacts, both on-site and off-site, should be minimized. The following design guidelines shall pertain to public rights-of-way. Private streets shall be given additional flexibility in design to create the appropriate environment.

425.05 DESIGN GUIDELINES

Design Speed

Design speed should closely match the street type, vehicle use and the proposed sped limit. The majority of street types are “streets” and “lanes,” which provide direct access to housing and which have a desired upper limit of actual vehicle speeds of approximately 20 mph. Via a written Memorandum of Agreement in a form satisfactory to the County Attorney, and compliance by the developer with the requirements of O.C.G.A. 40-6-3 (a) (6) as it may be amended from time to time, the developer, for itself and its successors in title, shall grant Cobb County the authority to enforce all local ordinances and state laws, including the state Uniform Rules of the Road, within the TND and Mixed-use Village.

Street types and widths
Dimensions provided in the graphic examples are from curb face to curb face. The specific dimension of each street element is as follows (Please refer to Standard Detail 150):

Street Type	Lane	Parking	Bicycle *	Gutter	Median Gutter
Lane	**8'**	**8'**	**na**	**1'**	**na**
Street	**9'**	**6'**	**na**	**2'**	**na**
Avenue	**11'**	**6'**	**4'**	**2'**	**1'**
Main Street	**11'**	**6'**	**4'**	**2'**	**1' / na**
Boulevard	**11'**	**6'**	**4'**	**2'**	**1'**
Parkway	**12'**	**na**	**na**	**2' / na**	**1' / na**

* bicycle lanes are optional if alternate routes to the same destination are provided.

Designers must recognize the implications of shared street space and an interconnected street network. The most frequently and numerous users of TND street networks are motorists, bicyclists and pedestrians. Use by oversized vehicles, such as delivery trucks, moving vans, school buses and fire trucks, is generally infrequent, particularly on residential streets and lanes. A street should be not wider than the minimum width needed to accommodate the usual vehicular mix desired for that street. On a properly designed TND and Mixed-use Village street the occasional oversized vehicle may cross the centerline of a street when making a right turn.

In most cases, a properly designed street network should provide at least two routes of access to any property within the TND and Mixed-use Village. A high level of accessibility is offered to emergency vehicles by the interconnected network. The framework of main streets and avenues should provide appropriate service area routing for school buses and transit vehicles. Designers will coordinate with and involve all appropriate parties (including the Fire Marshall's Office) so to ensure that oversized and emergency vehicles are accommodated while facilitating the needs of the most frequent users.

Stopping Sight Distances
Minimum stopping distances should conform to the design speed for the particular street and the stopping distances required for wet pavement conditions, as follows:

20 mph	25 feet
25 mph	150 feet
30 mph	200 feet

These sight distances should be provided by both vertical and horizontal alignment. Where grades vary from level conditions, stopping sight distances can be decreased for uphill grades and must be increase for downhill grades.

Vertical Curve Design
K Values for vertical curve design should be consistent with design speed. Maximum centerline grades should also be consistent with design standards.

Centerline Radii
The criteria for minimum centerline radius for design speeds of 25 mph and less (no super elevation) are:

20 mph	90 feet
25 mph	100 feet

Curb Radii
For design speeds of 20 mph the criteria for curb radius is 15 feet. Some intersections on avenues, main streets and boulevards may require curb radius of up to 25 feet (if differentiated by different building material such as pavers). With larger curb radii sidewalks may be set back six to 10 feet from curbs and on-street parking my be restricted 30 feet back from the intersection on each street.

Intersection sight triangles
The minimum sight triangle for stop conditions at street intersections shall be 70 feet along the major road right of way and 10 feet along the minor road right of way. The intersection sight triangle shall be permanent right of way. This may be reduced for lower design speeds on lanes and streets.

Curb Construction
All curbed streets shall be built in accordance with Cobb County requirements for vertical curb and gutter construction. As noted under “Street types and widths” above, most gutters are anticipated to be 2 feet in width. Gutters for lanes and street medians are anticipated to be 1 foot.

Pavement Design
When the developer proposes to construct private alleys, the facility should meet Cobb County Pavement Specifications. Where alleys are to be unpaved, a minimum paved apron of at least 50 feet from edge of pavement shall be required at the tie in with any paved facility. Lanes, Streets, Boulevards, and Parkways shall meet the pavement design criteria established elsewhere in these standards except that the use of different textures, such as brick pavers, stone pavers, stamped concrete, or different colors are allowed in order to separate roadway elements and signal the motorist of a transition to a more pedestrian-oriented environment. They can be used to clearly mark and identify pedestrian crosswalks. Variations in texture and color can also provide visual interest and increase safety.

Sidewalks and Pedestrians

Minimum width for a sidewalk is 5 feet. Sidewalks that directly abut curbing shall be a minimum of 6 feet. Sidewalks may need up to an additional 2 feet of width if they directly abut fences, walls and buildings. Within commercial areas and places with high pedestrian volumes, sidewalks should be sized and surfaced appropriately for anticipated pedestrian traffic volumes and to meet or exceed ADA guidelines. In Mixed-use Villages, pedestrian-oriented elements may be added to heighten the pedestrian experience. These include benches, trash cans, information maps, or other similar features. If these items are to be included, sufficient sidewalk width needs to be provided to meet ADA accessibility criteria.

Pedestrian connections across traffic lanes, landscaped areas, parking lots and between buildings, adjoining commercial and residential sites, amenities, multi-use paths and transit shall be safe, clearly marked and shall provide direct access. All mixed-use buildings shall be accessible by pedestrian walkways. Walkways should be shaded, landscaped and illuminated.

Crosswalks shall be placed at intersections and shall be as safe and convenient as possible. They shall be clearly marked. Mid-block crosswalks and pedestrian refuges shall also be provided as appropriate. Signal timing shall be adjusted to provide for increased crossing time at high-volume intersections.

Bicyclists

On lower volume streets bicyclists should be considered a normal part of the vehicle mix on the street. On higher volume streets bicyclists should be accommodated with 4 feet wide bike lanes, but separate routes for less experienced bicyclists may be considered as well. Routing bicyclists within and through TND or Mixed-use Villages may include signage and striping, including changing the color of the entire bike lane, as appropriate. All non-residential components of a TND or Mixed-use Village shall provide bicycle racks as part of a pedestrian-oriented element.

Traffic Calming

In achieving a pedestrian-friendly environment, a TND and Mixed-use Village inherently lead to the need for traffic-calming measures. Traffic-calming measures shall be included within the development. Depending on the type of road and the objective, there is a wide variety that is appropriate for a TND or Mixed-use Village.

Reducing Speed Limit – Reduction of posted speeds can add to the creation of a more urban street setting, while also increasing pedestrian and vehicular safety. Reducing speed limits usually needs to be combined with other traffic-calming measures in order to achieve the desired affect.

Pre-warnings – Typically lines on the pavement with (rumble strips) or without penalty (lines and traffic signs).

Street and Lane-width Adjustments – Streets can be narrowed through actual decrease in lane widths or with the creation of medians or using wide-edge markings.

Pavement Textures and Colors – The use of different textures, such as brick pavers, stone pavers or stamped concrete; or different colors can be used to separate roadway elements and signal the motorist of a transition to a more pedestrian-oriented environment. They can be used to clearly mark and identify pedestrian crosswalks. Variations in texture and color can also provide visual interest and increase safety.

Roundabouts – Roundabouts can provide for reductions in speed and shall be signed with yield signs and keep right signs as appropriate.

Landscape Design – Variations in plantings and landscape can perceptually narrow the roadway, provide visual interest and mark a transition to a more pedestrian-oriented environment. This includes the placement of a consecutive row of street trees close to the right-of-way within a 5' planted strip behind the curb and gutter.

Speed Tables – There is a wide variety of profiles and lengths of speed tables. Choosing the appropriate profile and length depends on the desired speed reduction. As a general rule, speed "humps" should be discouraged in favor of speed tables.

Raised Areas – Raised areas are typically a trapezoidal hump with extra length to allow for longer vehicles to have all wheels on them.

Staggering – This is a scenario where a lane is typically shifted over.

Medians and Islands – Medians, whether landscaped or not, and islands, which are usually raised and can also be landscaped, provide refuge and shelter for pedestrians as they cross the street.

Gateway – A gateway can be composed of a different pavement texture or color accompanied by signage and landscaping and provides a transition between different environments.

Transit

TND design should be inherently compatible with transit. Transit should be addressed wherever it is present and should be appropriately planned where it may not yet exist. Transit services are typically provided within core areas and along avenues, main streets and higher-capacity roads.

Due to size and interconnected street pattern, residents often do not need to walk more than ¼ mile to the nearest transit stop.

Street signage

Street signage within a TND and Mixed-use Village shall meet all safety standards and shall be reviewed and approved by the appropriate transportation agency. Flexibility in street sign design is necessary to aid in creating the appropriate environment. The following elements will be considered for alternative street signs during the review process:

Recognizable – The street sign must be recognizable to the motorist or pedestrian with the proper border, color(s) and shape.

Location – The street sign must be located in the appropriate space in order to give the motorist and pedestrian time to react.

Lighting – Any alternative street sign must be properly lit to ensure visibility and readability.

Other Signs – Any alternative street sign must not be blocked or obstructed by other signs. It must be clearly visible to the pedestrian and motorist.

Size and Materials – Size, materials and font can vary, but must be compatible with the scale, architecture and materials of the development and the surrounding neighborhoods. Reflective materials shall be used on the appropriate street signs when requested.

Integration – Any alternative street signs must integrate with the theme, architecture, site plan design and other signage within the development. The signage within the development shall be consistent and have continuity.

Traffic-Calming Measures – In order to ensure that motorists and pedestrians are aware of any change in street sign design, traffic-calming measures shall be established in near proximity to the signage.

Maintenance Agreement Required – Any alternative street signs that are located on public roadways must be privately maintained by a property owners' association and referenced within a maintenance agreement between the association and the Cobb County Department of Transportation. Said maintenance agreement must indemnify the county from any responsibility to maintain or replace the alternative street sign.

On-street Parking

"Informal parking" refers to parking that is allowed along lanes and residential streets, but is not designated or marked as parking areas. On-street parking along major streets should be signed, marked or otherwise clearly designated (should also be wider than 28 feet). Any street less than 28' wide shall establish no parking signs. On – street parking should be complimented by development that is located closer to the street with garages and alleyways in the rear. Along a central "Main Street" in a

Mixed-use Village, on-street parking is allowed in order to provide vibrancy and activity and improve safety.

Planting Strips and Street Trees

Planting strips, located between the curb and sidewalk parallel with the street, shall be 5 feet or more in width. Care should be used to ensure that larger planting strips do no push pedestrian crossing areas back from intersections by requiring a larger curb radius. On streets with design speeds of 20 mph or less, or on streets with on-street parking, small street trees may be planted within 3 feet of the back of curb and should generally be planted along the centerline of the planting strip. Within commercial areas and other sidewalks with high pedestrian volumes, grated tree wells may be used in lieu of planting strips. To maintain sight lines, trees and other objects should be restricted from corner for distances of 30 feet on all sides. Along all planting strips the area between 2 feet and 7 feet above ground shall be maintained as a clear zone to preserve sight lines and accommodate pedestrians.

Drainage

All regular storm drainage requirements must be met, along with the following additional standards:

Vertical curbs – Vertical curbs shall be used on all mixed-use streets, including curb returns. Storm sewer inlets must be placed where the allowable street flows are exceeded.

Local and Collector Streets – The initial storm flow must not cross the street crown from one side to the other. The major storm flow must not exceed twelve inch (12”) depth at gutter and must not flood adjacent property or buildings.

Entry/Spine Streets and Parkways – The initial storm flow spread must not encroach beyond the outside travel lane. Major storm flows must be confined in the street section while preserving one drivable lane in each direction.

Alleys – Storm flows in alleys shall be limited to the flows generated from the rear of the lots adjoining the alley. Alley flows shall not cross the intersecting streets into another alley but shall be captured or diverted at the intersecting streets

Special Design Features – Special design features, such as curb extensions and speed tables will require special drainage design considerations.

Storm Sewer Main – The drainage design engineer is alerted to the challenge of finding a suitable location for storm sewer mains in mixed-use streets especially if the street is narrow and other utility lines are present.

Utilities

All utility installations within rights-of-way shall be consistent with Cobb County's current Utility Policy. For residential subdivision streets, herein defined as "lanes", and "street," and residential collector streets, herein defined as "avenues" and "main streets," underground utilities may cross under or run longitudinally under the pavement, provided future utility stub-outs are installed prior to paving. For all other streets and highways, underground utilities may cross under but may not run longitudinally under the pavement, except in unusual situations approved by the Directors of Cobb County DOT, Cobb County Water System and Cobb County Community Development.

For installations outside of rights-of-way, utilities (either above or underground) may be located in alleyways. If utilities are not to be placed in alleyways the developer should consider proving a 5 foot (minimum) utility easement behind the sidewalk.

Lighting

Lighting in a TND and Mixed-use Village should provide aesthetically pleasing installations that provide the needed illumination within the development. This should occur while also protecting surrounding and adjacent residential uses from glare and direct light sources, as well as preventing the diminishment of the night sky. Lighting plans for a TND or Mixed-use Village shall be subject to approval by the Cobb County Department of Transportation.

Issues – To create a cohesive development with both residential and commercial uses, specific lighting issues should be addressed, including glare, safety, illumination levels, clear designation of pedestrian ways, and aesthetic appeal.

Lighting Fixtures – Designs of poles and fixtures should be compatible with the architecture, site design and surrounding neighborhoods. Decorative light fixtures are strongly encouraged within the development and can be used in streetscapes.

Right-of-Way – All lighting located in the public right-of-way must meet the requirements in Section 106-68 of the Cobb County Code except that height may be variable in a Mixed-use Village as long as the request is meeting the average foot candle requirement. As a general rule, more and shorter lights are preferred to fewer, taller, high-intensity lights. The height of light fixtures can vary, but should be in scale with the architecture, site design and theme generated by the new community.

Scale – The scale of lighting fixtures and the illumination provided must be appropriate for both pedestrian and vehicular movement.

Distance – Distance between light fixtures can vary as long as proper and suitable lighting is provided for both pedestrian and vehicular movement.

Maintenance Agreement Required – Any alternative lighting that is located on public roadways must be privately maintained by a property owners' association and referenced within a maintenance agreement between the association and the Cobb County Department of Transportation. Said maintenance agreement must indemnify the county from any responsibility to maintain or replace the alternative lighting.

Resolution of Conflicts

Whenever the reviewer, after due consideration of all relevant factors, determines that an irreconcilable conflict exists among vehicular and non-vehicular users of a TND or Mixed-use Village street space, that conflict should be resolved in favor of the non-vehicular users, unless the public safety will truly be jeopardized by the decision.

425.06 ADMINISTRATIVE REVIEW CRITERIA

425.06.01 Criteria Purpose

The criteria help outline a "classic" TND or Mixed-use Village. The purpose of these criteria is to provide a guide to Cobb County when determining whether a proposed development may thus be designed according to TND or Mixed-use Village guidelines rather than conventional subdivision street standards. Failing to meet all of the criteria does not imply that a proposed development is not a TND or Mixed-use Village. However, proposals not fitting the "classic" criteria may require additional review.

425.06.02 TND Review Criteria

Size

A TND or Mixed-use Village should be designed at a walkable scale– considered to be approximately a 5 to 10 minute walk from core to edge, or a ¼ to 1/3 mile maximum distance. All or most residential development must fall within this range.

Composition

There is a discernable community center or core area. The proposed development must have a mixture of residential and non-residential land uses. Most non-residential uses are located within the community core area. Within the core area, a minimum of 15% of floor area must be devoted to commercial uses oriented towards TND or Mixed-use Village residents. Elementary schools are an important community element. Public structures, such as schools, churches and civic buildings, and public open spaces, such as squares, parks, playgrounds and greenways, shall be integrated into the neighborhood pattern.

Density and Intensity

Residential densities, lot sizes and housing types may be varied. Higher densities, often involving multi-family or attached dwelling units, are generally proposed in, adjacent to or within close proximity to the core area. Lower densities, usually detached single family dwellings, are generally located toward the edges.

Non-residential development intensities should be sufficient to encourage and promote pedestrian access. Development intensities of non-residential buildings should generally be such that buildings emphasize street frontages, sidewalks and paths, and transit stops. Regardless, the intensity of non-residential development should be compatible with and reflective of surrounding residential development patterns.

Street Patterns

All or most streets within the proposed network must be part of a dense, interconnected pattern. TND or Mixed-use Village streets should connect with adjacent street networks as much as possible. The degree of interconnectivity should be assessed by its ability to permit multiple routes, to diffuse traffic and to shorten walking. Most TND or Mixed-use Village streets are designed to minimize through traffic. Streets are relatively narrow and often shaded by rows of trees. Alleys may be used to provide site access. Larger vehicular corridors are usually, although not exclusively, found within the core area and near the perimeter of the proposed development.

Block Length

All or most low speed, low volume streets should have short block length of between 250 and 500 feet. Exceptions may be needed due to topography, environmental protection, preservation of cultural resources, and similar considerations.

Rights-of-Way

Within a TND or Mixed-use Village, the right-of-way is an important design element of the public space or “streetscape.” The right-of-way width should be the minimum needed to accommodate the street, median, planting strips, sidewalks, utilities, and maintenance considerations. The right-of-way width should be appropriate for adjacent land uses and building types. Planting strips between curb and sidewalk may be used to provide sufficient building types. Planting strips between curb and sidewalk may be used to provide sufficient space for street trees. Use of alleys and other alternate access or easements for utilities and maintenance vehicles should be taken into account when determining sizes of rights-of-way.

Relationship of Buildings to Street

Buildings are oriented toward the street. Buildings within the core area are placed close to the street. All lots and sites must have pedestrian connections and the core area must be fully accessible to pedestrians. Parking lots and garages rarely face the street. Off-street parking may be located to the side or behind buildings but not in front of buildings or in such a manner as to interface with pedestrian access.

Sidewalks

To comply with the Americans with Disabilities Act, sidewalks are a minimum of 5 feet wide and should be wider in commercial or higher intensity areas, when directly abutting curbs without a planting strip or parked cars, or when adjacent to walls or

other built elements which reduce usable width. Sidewalks should be on both sides of the street. Wherever possible, there should be a continuous pedestrian network adjacent to the streets. Curb cuts should be minimized to reduce conflicts with pedestrians.

Pedestrian Street Crossing

Street crossings must not be longer than are actually necessary. The needs of pedestrians should be balanced with the needs of vehicular traffic. Mid-block crossings, bulb-outs, raised crosswalks and similar techniques are commonly used to accommodate pedestrians when appropriate for traffic conditions and site specific situations.

On-Street Parking

Many streets have on-street parking. One-street parking is a common traffic calming element of a TND or Mixed-use Village, in that it slows vehicular traffic while providing a buffer between street and sidewalk.

Curb Cuts

Curb cuts should be minimized to reduce effects on-street parking, conflicts with pedestrians and cyclists, and interruptions of traffic flow.

Highways and Large Through Corridors

The proposed development cannot be penetrated by arterial highways, major collector roads and other corridors with peak hourly traffic flows of 1,200 vehicles, or average daily traffic volumes of 15,000 or more vehicles. Such corridors can only be located at the edge of a TND or Mixed-use Village.

Policies

Cobb County will not accept alleys into the county system. However, these features are encouraged as appropriate and desirable elements of a walkable community. Construction and maintenance of alleys will be the responsibility of the property owners' association or comparable individual, or group that has responsibility for other common assets.

Cobb County, consistent with current policies, will not install street trees or median plantings or construct sidewalks or bike paths, nor will the County maintain trees, plantings, sidewalks, bikepaths or similar features within the right-of-way. However, these landscape features are recognized for their traffic calming, aesthetic and environmental benefits. Installation and construction of such features is the responsibility of the developer. Maintenance of such right-of-way features will be the responsibility of the property owners' association or comparable individual, or group that has responsibility for other common assets. Vertical curb and gutter construction is preferred throughout the entire development. Vertical curb and gutter construction is required within the community core, in all areas where densities are 6 units per acre or grater, and where sidewalks on both sides of the street are proposed.

Alternative construction will be considered in low density areas, where sidewalks on one side of the street are proposed, or within water supply watersheds and similar environmentally sensitive areas, or preserved open space and natural areas.

Application Requirements for TND and Mixed-use Village

- The use, approximate size, and location of all buildings and structures.
- All proposed land uses and the densities of dwelling units.
- Proposed on- and off- street parking and circulation plan showing the location and arrangement of parking zones or parking spaces, along with all driveways connecting with adjacent streets and highways.
- The proposed location, use, improvements, ownership and manner of maintenance of common open space areas.
- In the case of proposals which call for phased development, a schedule showing the time period proposed, the type and square feet of non-residential land uses, and the number of and density of dwellings units for each phase.

426 COBB COUNTY ARCHITECTURAL DESIGN GUIDELINES FOR COMMERCIAL DEVELOPMENT, REDEVELOPMENT OR BUILDING RENOVATIONS

426.01 GOALS & OBJECTIVES

The goal of the Cobb County Architectural Design Guidelines is to provide a method to create better designs for commercial/retail/office/institutional buildings within the County. The ultimate design of a building, is in many ways an artistic expression and cannot be quantified or easily regulated. However, some basic design features of a building's footprint and exterior are essential and will go a long way towards discouraging a featureless redundancy of architecture and improving, the visual interest in a building's appearance from the street. As studies indicate, retail/commercial areas that have a higher aesthetic appeal to customers realize an increase in pedestrian activity. Buildings with a higher standard of architecture have increased resale value and realize more stable property values, whereby resulting in a more stable tax base.

The objective of these guidelines is to articulate clear community design principals that assist architects/engineers in understanding the County's minimum design criteria. These standards do not dictate or limit design or style of a building, as architectural diversity is encouraged, but will encourage more thoughtful and aesthetically pleasing solutions to a building's design. The regulatory concept is to calculate design points for six different aspects of a building's design. The required point system of these standards allow flexibility in achieving the minimum number of **total** points for a particular building, while there is no minimum for any of the individual six factors. The six design rules or factors are fashioned to give a

developer/architect some flexibility in achieving the minimum number of total points for a particular building.

426.02 EXPLANATION OF THE POINTS

The numbering system provides a system that allows architects/engineers to be able to know, as they are designing the building, if the minimum scoring criteria is being met. Thus, upon submission of the plans to the Planning Division for architectural review, the architect/engineer will have a good degree of comfortableness that their design meets all minimum standards. The system also ensures the rating system is measured on a quantifiable level, therefore ensuring an equitable and non-arbitrary review among all applications.

The rules are divided into six categories and designed to encourage interesting building facades. Points are given for changing the plane of a building facade, for providing contrast with shade (porches, balconies, canopies) providing interesting design features, roof lines or wall openings (windows, doors). Since most designs would not score enough points from an individual category, the objective for the building designer is to gain sufficient points in the combination of all six categories to achieve the minimum number for the particular classification use. The scoring system is designed to achieve: a simple minimum number of:

10 for buildings planned for *Industrial use.
20 for buildings planned for **Office/Institutional use.
25 for buildings planned for a ***Retail/Commercial use.

A simple minimum number of **10** for buildings planned for Industrial use. *Industrial uses are defined by the Cobb County Zoning Ordinance as all permitted uses identified within the Light Industrial (LI) and Heavy Industrial (IU) zoning categories. A simple minimum number of **20** for buildings planned for Office/Industrial use. **Office/Industrial are defined by the Cobb County Zoning Ordinance as all permitted uses identified within the Low-Rise Office (LRO), Office/Services (OS), Office Institutional (OI), Office Mid-Rise (OMR), and Office Hi-Rise (OHR).

A simple minimum number of **25** for buildings planned for a Retail/Commercial use.***Retail/Commercial uses are defined by the Cobb County Zoning Ordinance as all permitted uses identified within the Limited Retail Commercial (LRC), Neighborhood Retail Commercial (NRC), Community Retail Commercial (CRC), Neighborhood Shopping (NS), Planned Shopping Center (PSC), General Commercial (GC), Tourist Services (TS), Regional Retail Commercial (RRC), Urban Village Commercial (UVC), and Planned Village Commercial.

The six categories are:

A. EXTERIOR WALL LENGTH:
This rule gives points for breaking long facades by a variation in the building surface, such as the projection/departure of walls.

B. EXTERIOR SURFACE AREAS:
This rule gives points for breaking walls in the vertical plane, such as providing roof lopes.

C. SHADE COVERAGE AREAS:
Points are awarded in this category for building facades that have projections or other features that provide building shadows, such as balconies, porches and canopies.

D. EXTERIOR WALL INTERRUPTIONS:
Doors, windows and other framed building openings that help to break up the "bleak" look of a long, blank wall. Points are given for the amount of openings in a building surface.

E. ARCHITECTURAL DESIGN TREATMENTS:
Points are given in this section for combinations of architectural design treatments, additional landscaping & trees.

F. FAÇADE DETAIL TREATMENTS:
Points are given in this section for combinations of 2 (two) or more detail features.

426.03 USE OF GUIDELINES

The guidelines apply to new development or undeveloped parcels or redevelopment proposals involving demolition of existing structures. The guidelines will also apply when a permit is sought to remodel or make improvements that are equal to or greater than fifty percent (50%) of the total, current assessed value of the structure. If stipulations relating to the architecture of a building is placed on a development during a zoning case or stipulations have been placed on a piece of property prior to adoption of these standards, those stipulations will take precedent over these standards, if found to be in conflict. Otherwise, past and future zoning stipulations will be in concert with the adopted standards, with the strictest enforced.

These guidelines are only a portion of the overall development review conducted by the County. The laws, ordinances and development standards of the County are not negated by these review guidelines, but are in addition to the adopted laws and ordinances of the Cobb County Code. If any Guideline element is in conflict with, or is more stringent than any pertinent County Code, the more stringent requirement will be enforced.

426.04 SUBMISSION OF DESIGN GUIDELINE WORKSHEET

Review of the worksheet is conducted bv the Planning Division staff and not an architectural review committee, thereby ensuring an efficient review process. The architectural review will be concurrent with the Plan Review process and conducted in an expedient manner. At the time the developer/architect/engineer submits engineering drawings to Plan Review, the applicant will submit the following items for architectural review:

1. Elevation drawings of all sides of the building

2. Footprint of building with all pertinent measurements needed for guideline calculation purposes (see worksheet)

3. List of building materials and associated color, size, style

4. A completed architectural review worksheet, as supplied by the County.

Routine review time shall be no more than ten (10) business days, which will provide ample time for staff to conduct the review and for the architect/engineer, if necessary, to make any necessary revisions. Once architectural approval is granted, the architect/engineer/developer will be contacted and notified of the approval and all review items submitted by the applicant will be forwarded to the Plan Review Section, including the approved Guideline Worksheet. *Please note, prior to the adopted date of these standards, all plans submitted to Site Plan Review for approval, as well as sites currently being permitted and constructed, will be considered exempt.*

426.05 ARCHITECTURAL REQUIREMENTS

Architectural design of the building's exterior shall comply with the following minimum standards:

1. Building facades shall be architectural treatments of glass and brick, stone, architectural block, stucco and/or wood (combining these finishes are allowed and encouraged).

2. Portable buildings shall be prohibited. Metal buildings are prohibited except for buildings that have an *Industrial use. Only then, a maximum of fifty percent (50%) of the building's side(s) or rear, when visible from the street, can be metal and shall be used in combination with another exterior building material noted in #1 above. However, the front of all *Industrial buildings must be completely made of a building material noted in #1 above. If an *Industrial building will be adjacent to a residentially zoned property, any side(s) of the building

visible from that residentially zoned property shall not be made of metal.

3. The preferred roofing materials for roofs are metal, tile, slate, stone or wood shake. If typical shingles are used such as asphalt, the appearance should be that of slate, tile, metal, or shake.

4. Facades of anchor stores located within multi-tenant buildings shall be varied in the depth of the footprint and in the height of each tenants roofline. Also, distinct architectural identity for the entry into separate businesses shall be provided in the facade.

5. Exterior building walls shall incorporate changes in building material, color or facade by using such elements as windows, doors, trellises, false windows, recessed panels, soldiered columns, or landscaping adjacent to, or growing on, the building. Such changes should be frequent and determined by the height, length and overall scale of the building.

6. All mechanical, HVAC and like systems shall be screened from all street, driveway, pedestrian level views and residential views. Roof lines shall be designed to screen such equipment located atop buildings, and an opaque wall or fence of masonry, stucco, split-faced block, wood, etc. shall provide adequate screening for ground based equipment.

426.06 SITE PLAN RECOMMENDATIONS

1. Where appropriate and feasible, buildings may be situated to the front of property setbacks with parking oriented toward the side and rear of structure(s).

2. Landscaping should be used to shield automobile parking lots from public vantage points, including streets and sidewalks.

3. Dumpsters should be located at the rear of a structure/site and should be enclosed with an opaque (solid) wall enclosure. The enclosure should be constructed of a masonry building material that is the same, or similar, to the primary structure and have gates made of metal.

4. Decorative lamppost, benches, bicycle racks, planters are all encouraged to improve the pedestrian sidewalk area and to encourage pedestrian activity.

426.07 APPEAL OF GUIDELINES

An applicant that does not meet the minimum design score and is appealing a scoring criteria element can do so with the Director of Community Development. An appeal of the Director's determination can be made at the monthly meeting of the Cobb County Board Commissioners. The BOC will only consider appeals of the staff's administrative decisions and scoring criteria. The BOC will not consider variances to these guidelines. An application for appeal can be filed with the Cobb County Board of Commissioners. Following the appeal review, the decision of the BOC shall be final.

426.08 COMMERCIAL BUILDING DESIGN FACTORS WORKSHEET

A. Exterior Wall Length:

(NOTE: The street facing sides of all retail/commercial buildings require a minimum of two separate wall sections meeting the requirements below).

1. **L** = Length in feel of building perimeter visible from the street. (See Figure1) _____ft.

2. **F** = Length of the longest horizontal straight section of the exterior façade visible from the street. (see Figure 2) _____ft

To determine if a horizontal straight section of building is two separate walls, the following will apply:

a. There must be an intervening physical separation of space or wall which makes horizontal separation of at least three (3) feet (see Figure 2).

b. The intervening physical separation of the space and wall must make a vertical separation of at least one (1) foot (see Figure 3).

c. The total perimeter length of the intervening space or wall section must be at least five feet (i.e. section a. above must total five (5) feet) (see Figure 3).

d. Materials within the intervening section or the same plane section of the wall can be of the same building material or a different material to encourage contrast.

e. When a wall section does not meet requirements of a, b and c above, the plane shall be considered one wall section (see Figure 3).

3. **W** = ratio of $\frac{L}{F}$ = _____

4. **Fa** = (W x 2) _____

B. Exterior Surface Areas:

1. **P =** Total surface area of all flat and/or projected, non-sloping, sides of the building visible from the street (i.e. the flat vertical exterior walls of the building) (see Figure 4) _____ sf.

2. **R =** Total surface area of all sloping surfaces of the building that is visible from the street (i.e. roof of building) (see Figure 4) _____ sf. For the purpose of the calculation "**R**":

a. Only sloping areas that range from 15 degrees to 75 degrees from the vertical point may be included in this calculation.

b. Circular, convex or concave wall surfaces must be offset at least one foot from the vertical wall surface and have an angle of at least 60 degrees to be included in the surface area calculation (see Figure 4).

c. **Q** = the total number of building sides visible from the street.

3. **E** = ratio of $\frac{\mathbf{R}}{\mathbf{P}}$ = _____

4. **Fb =(10 x E) =**_____

C. Shade Coverage Areas:

1. **S =** Total covered but unenclosed structural exterior area attached to the building and measured on a horizontal plane (see Figure 6) _____ sf.

a. The floor area of covered exterior balconies may be included. Attached canopies, porches, verandas, and other shade oriented structural design features may also be included.

b. Each vertical opening into the shaded area must be framed on the top and sides by structural building materials. The area around the "frame" of the opening must be at least 20% of the opening area (see Figure 6)

c. The area under detached canopies shall not be included in the calculation.

2. **G** = Total area of the interior ground floor of the build _____ sf

3. **C** = ratio of $\frac{\mathbf{S}}{\mathbf{G}}$ = _____

4. **Fc** = (100 x C) = _____

D. Exterior Wall Interruptions:

(NOTE: A minimum of 20% of the flat, non-sloping area of all street facing sides of retail/commercial buildings are required to have openings through which light my pass meeting the definition of number one below).

1. **W'** = Total number of windows, doors, and other openings into the structure through which light may pass. _____

   For the purpose of this calculation, each opening must be framed on the sides, top and/or bottom by structural building- materials that equals in surface area to at least 50% of the surface area of the opening.

2. **Q** = As previously calculated in Subsection B (2) (c) above (total number of visible sides from the street) _____

3. **O** = ratio of $\frac{\mathbf{W}}{\mathbf{Q}}$ = _____

4. **Fd** equals the ratio of **O** above, if total floor area is less than 50,000 sf. If floor area is greater than or equal to 50,000 s.f.. **Fd** shall be no more than 10 points _____

If floor area is greater than or equal to 50,000 s.f., **Fd** shall be no more than 8 points

E. Architectural Design Treatments:

The intent of this section is to promote better architecture & visual interest.

1. A combination of (3) three or more approved building materials on the primary building facade: 2 points

2. Additional landscaping at primary façade (per 100 square feet): 2 points

3. A combination of (3) three of the following building design treatments: 2 points

a. Canopy or portico
b. Peaked roof forms
c. Overhangs a minimum of (3) ft. wide with a minimum of a (6) inch wide fascia
d. Arcade a minimum of (6) ft. wide

e. Display windows a minimum of (4) ft. wide & (6) ft. high
f. Ornamental & structural details integrated into the building structure
g. Clock or bell tower
h. Sculptured art work (excluding advertising)
i. Awnings over windows & doors
j. Arches or arched forms
k. Raised parapet with cornice over primary entrance
l. Decorative lampposts
m. Any other treatment that staff feels meets the intent of this Section

Architectural Design Treatments: =_____ points

F. Façade Detail Treatments:

The intent of this section is to provide visual interest bv adding (2) two or (3) three of the following: detail features to the primary facade. All design elements shall repeat at intervals of no more than (25) ft. either vertically or horizontally.

A combination of (2) two of the following features:	2 points
A combination of (3) of the following features:	3 points
Each additional (2) two features:	1 point

a. Building step backs. offsets or projections a minimum of (3) ft. wide
b. Color change
c. Texture & / or material change
d. Architectural banding
e. Pattern change
f. Soldiered columns
g. Trellises
h. Expression of a vertical architectural treatment a minimum of (12) in. wde
i. Recessed panels
j. Three (3) or more roof planes
k. Outdoor patio area with landscaping, with shading & seating components

Facade Detail Treatments: =_____points

TOTAL DESIGN SCORE: Fa + Fb + Fe + Fd + E + F = _____ points

Points Required: Commercial/Retail = 25 points
Office/Institutional = 20 points
Industrial = 10 points

426.09 COBB COUNTY ARCHITECTURAL DESIGN GUIDELINE WORKSHEET

(Note: The street facing sides of all retail/commercial buildings require a minimum of two separate wall sections meeting the requirements below).

A. Exterior Wall Length:

1. **L** = Length in feet of building perimeter visible from the street. _____ ft.

2. **F** = Length of longest horizontal straight section of the exterior facade visible from the street _____ft

3. **W** = ratio of L / F = _____.

4. **Fa** = W x 2 = _____.

B. Exterior Surface Areas:

1. **P** = Total surface area of all flat and/or projected, non-sloping, sides of the building visible from the (i.e. the flat vertical exterior walls of the building) (see Figure 4). _____s.f.

2. **R** = Total surface area of all sloping surfaces of the building that are visible from the street (i.e., roof of building) (see Figure 4). _____s.f.

3. **E** = ratio of = R / P = _____.

4. **Fb** = 10 x E = _____.

C. Shade Coverage Variables:

1. **S** = Total covered but unenclosed structural exterior area attached to the building and measured on a horizontal plane. (see Figure 6) _____s.f.

2. **G** = Total area of the interior ground floor of the building. _____s.f.

3. **C** = Shade coverage ratio or S / G = _____.

4. **Fc** = 90 x C = _____.

D. Exterior Wall Interruptions:

(Note: A minimum of 20% of the flat, non-sloping area of all street facing sides of retail/commercial buildings are required to have openings through which light may pass meeting the definition of number one below).

1. **W** = Total number of windows, doors and other openings into the structure through which light may pass **= _____.**

2. **Q** = Total number of building's visible sides from the street _____.

3. **O** = Ratio of W / Q _____.

4. **Fd** is the ratio of O above, if total floor area is less than 50,000 s.f. For floor area greater than or equal to 50,000 s.f., "Fd" shall not exceed 10 points _____.

E. Architectural Design Treatments: = **_____points**

F. Facade Detail Treatments: = _____points

G. Total Design Score: _____points

TOTAL = Fa + Fb + Fc + Fd + E + F = _____

STAFF COMMENT:

426.10 DEFINITIONS/USE OF TERMS

Aggregate – Any of a variety of materials, such as sand and gravel, added to a cement mixture to make concrete.

Arcading – A series of arches, raised on columns, that are represented in relief as decoration of a solid wall.

Articulation – Shapes and surfaces having joints or segments which subdivide the area or elements and which add scale and rhythm to an otherwise plain surface.

Assessed Value – The most recently apprised value of a structure according to the Cobb County Tax Assessors Office.

Balcony – A projecting platform usually on the exterior of a building, sometimes supported from below by brackets, wood, metal or masonry.

Baluster – One of a number of short vertical members used to support a stair railing.

Band – A flat horizontal fascia, or a continuous member or series of moldings projecting slightly from the wall plane, encircling a building or along a wall, that makes a division in the wall.

Bond – an arrangement of masonry units laid in a particular pattern that provides a contrasting stringcourse to the primary buildings masonry pattern.

Border – A margin, rim, or edge around or along an element; a design or a decorative strip on the edge of an element.

Bracket – A projection from a vertical surface providing structural or visual support under cornices, balconies, windows, or any other overhanging member.

Building material – Any material used in the construction of buildings, such as steel, concrete, brick, masonry, glass, wood, among others.

Canopy – A covered area which extends from the wall of a building, protecting an enclosure such as a door or window.

Cap – The top member of any vertical architectural element that projects such as the cornice of a wall or the transom of a door.

Coping – A protective covering over the top of a wall or parapet, either flat or sloping and sometimes extending beyond the front wall.

Corbel – A series of graduated projections, beginning at the face of the wall and progressing outward and upward, that serves as a support for a top cornice.

Concave – Forms that are curved like the inner surface of a hollow circle.

Convex – Forms that have a surface or boundary that curves outward as in the exterior or outer surface of a circle.

Cornice – A projecting shelf along the top of a wall supported by a series of brackets; the ornamental exterior trim where the building's roof meets the wall.

Crenellation – A pattern of repeated depressed openings in a parapet wall.

Door – A hinged, sliding, tilting, or folding panel for closing openings in a wall or at entrances to buildings, rooms, or cabinets and closets.

Dressing – Masonry and moldings of better quality than the facing materials, used around door and window openings or at corners of buildings.

Eave – The projecting overhang at the lower edge of a roof that sheds rain water.

Elevation – A drawing showing the vertical, exterior elements of a building as a direct projection to a vertical plane.

Façade – The main exterior face of a building, particularly one of its main sides facing a public space, almost always containing one or more entrances and noted by elaborate exterior stylistic details.

Fenestration – The design and placement of windows and other exterior openings in a building.

Floor Area – The gross horizontal area of the floor(s) of a building, excluding porches, balconies, etc and measured from the exterior face of the exterior walls of a building.

Frieze – An elevated horizontal continuous band or panel that is usually located below the cornice, and often decorated with a repeated pattern.

Gable – The entire triangular end of a wall, above the level of the eaves, that conforms to the slope of the roof to which it abuts.

Horizontal – Operating or in the direction of a plane along the horizon or a base line.

Intervening – to occur, disrupt, or come between points.

Mansard roof – A roof with a steep lower slope and a flatter upper slope on all sides, either of convex or concave shape.

Masonry – A building material that includes all stone products, all brick products and all concrete block units, including decorative and customized blocks.

Molding – a decorative profile given to architectural cavities or projections such as cornices, bases, or door and window jambs/heads.

Parallel – extending in the same direction and not meeting or intersecting.

Parapet – A low protective wall or railing along the edge and above a roof, balcony, or similar structure.

Perimeter – The outer boundary of a closed plane diagram or figure.

Plane – The simplistic kind of two-dimensional surface, generated by the path of a straight line and defined by its length and width; usually defined by its shape and surface characteristics.

Porch – A roofed entrance, either incorporated in a building or as an applied feature to the exterior.

Quoin – One of a series of stones or bricks used to mark or visually reinforce the exterior corners of a building and often through a contrast of size, shape, color or material.

Rectangular – A plane four-sided parallelogram with four right angles: may be nearly square or stretched out to be nearly a band.

Relief – A projecting wall decoration raised above the background plane.

Rendering – a drawing of a building that artistically delineates materials, scale, shades, and is done for the purpose of presentation.
Ridge – The horizontal lines at the junction of the upper edges of two sloping roof structures.

Rhythm – Any kind of movement characterized by the regular occurrence of elements, lines, shapes and forms.

Soffit – A ceiling or exposed underside surface of a roof overhang, archway, balcony, beam or column.

Soldier Bond – Brick, block or stone laid vertically with the longer, narrow face exposed.

Veranda – Similar to a balcony but located on the ground level and can extend around one, two or all sides of a building.

Vertical – opposite to the plane of the horizon, usually a direction rising straight upward and downward.

Window – An opening in an exterior wall of a building to admit light and air.

427 URBAN DESIGN STANDARDS

427.01 CONCEPTUAL MASTER PLAN REQUIRED

Prior to submitting for plan review or any type of permits, any development/redevelopment project utilizing these urban design standards will require a conceptual plan approval including but not limited to: streetscapes, building heights, land use mixture and connection, pedestrian access, architectural design, etc.

427.02 INTENT

- Create a more "urban" environment where people can live, work, shop, be entertained and recreate;
- Improve the aesthetics of the built environment;
- Encourage a compatible mixture of residential, office, commercial, entertainment and open spaces uses within the area as a whole;
- Provide a pedestrian-oriented "Core" district that is safe, pleasant, convenient and highly conducive to walking.
- Encourage opportunities for the inclusion of pedestrian amenities including streetscapes, plazas, open spaces, public art, and public signage;
- Minimize conflicts between pedestrians, vehicles and bicycles;
- Protect the natural resources of the nearby adjacent parkland and facilitate better connections to the park and;
- Prevent the encroachment of incompatible commercial uses into residential areas;
- Restrict land uses that are incompatible with the district;
- Provide sufficient parking in an unobtrusive manner;
- Encourage shared parking arrangements and allow for off-site parking;
- Encourage mixed-use development within the "Core" and particularly around anticipated transit stops; and
- Provide sufficient, safe and accessible open space for active and passive enjoyment by residents and workers.

427.03 URBAN DESIGN POLICIES

- Proposals should seek to improve internal mobility within sites by allowing for pedestrian through-ways, internal streets, etc. Super-block development should be strongly discouraged, particularly when it interrupts the overall pedestrian circulation system of the area as a whole. In practice this may be difficult to achieve because it will require some degree of coordination
- Proposals should seek to improve internal mobility within sites by allowing for pedestrian throughways, internal streets, etc. Super-block development should be strongly discouraged, particularly when it interrupts the overall pedestrian circulation system of the area as a whole. In practice this may be difficult to achieve because it will require some degree of coordination

between various developments and create areas of the site that is open to the public. To the extent possible, redevelopment of large super-blocks should seek to dedicate new internal streets back to the public realm to avoid public-private issues of liability.

- In general, developments around proposed LRT stations stops should incorporate higher levels of density than outlying developments in an effort to have the greatest impact on traffic demand in the area. Furthermore, developments around LRT stations should be designed in order to maximize rather than hinder public access to stations.
- Similarly, higher density development should be concentrated away from transitional areas.
- Proposals should be mindful of traffic ingress and egress situations by not dispersing all traffic out in the same location at the same time of day. To the extent possible, there should be a variety of options for vehicles so as not to overburden any particular street within the network. However, new development should be strongly discouraged from providing non-residential vehicular access through residential areas.

500 MATERIAL SPECIFICATIONS

500.01 APPLICABILITY/EXEMPTIONS

500.01.01 Applicability

The provisions of the Codes to this Standard shall apply to the construction, alteration, repair, equipment, use and occupancy, location, maintenance, removal and demolition of buildings or structures and accessory structures, or any appurtenances connected or attached to such buildings or structures.

The provisions of the Codes to this Standard relating to the construction, alteration, repair, enlargement, restoration, relocation, or moving of buildings or structures and their accessory structures shall not be applicable for existing buildings or structures and accessory structures identified and classified by the State or local jurisdiction as Historic Buildings when such buildings or structures are judged by the Building Official to be safe and in the public interest of health, safety, and welfare regarding any proposed construction, alteration, repair, enlargement, restoration, relocation, or moving of buildings within fire districts.

In general, non-residential buildings and structures will consist of the following occupancies (reference Chapter Four, Table 400, of the Standard Building Code):

- Factory-Industrial: facilities involving assembling and/or manufacturing operations, etc.
- Hazardous: facilities involving highly combustible, flammable, or explosive materials, etc.
- Storage: warehouse, private and public garages, parking decks, etc.

500.01.02 Exemption

When a structure is equipped with a sprinkler system meeting the requirements of NFPA (National Fire Protection Act) the following exceptions to the building code may be allowed:

1990 COBB COUNTY CODE SECTION 3-6-2 through 3-6-49

<u>Multi - Family Sprinkler Ordinance.</u>

- Fire Department access may be extended from 50 feet from the back of the parking area to the face of the building to a maximum of 125 feet to the face of the building.

<u>Fire wall requirements:</u>

- For buildings up to 8,000 square feet per floor, no firewall is needed.

- For buildings up to 10,000 square feet per floor, a two-hour firewall to the underside of roof deck is required at the approximate center.
- For buildings over 10,000 square feet per floor, a four-hour fire wall extending up 36" above the roof surface and out flush with the roof overhang is required every 8,000 square feet.
- Standard ½" gypsum wallboard may be substituted for the 5/8" type "X" gypsum wallboard relating to one-hour tenant separation walls.
- Standard ½" gypsum wallboard may be substituted for the 5/8" type "X" gypsum wallboard and 5/8" plywood may be substituted for ¾" plywood relating to one hour floor-ceiling assemblies.
- Fee Simple Townhouses may have one hour rated party walls in lieu of two-hour rated party walls.
- Attic smoke stop at 3,000 square feet will be allowed in lieu of smoke stops between every unit.
- Exit travel may be extended to a maximum of 35 feet in lieu of the existing 20 feet.
- Tenants may travel by other tenants' doors and windows without those doors and windows being rated.
- Interior finish shall be class "C" or better.
- One hour rating of walls and doors of hazardous areas will not be required.

Unless otherwise specified within these Standards, all other requirements of applicable codes of Cobb County shall be complied with.

Certification of flow must be acceptable to the authority having jurisdiction. (Ordinance of 2-22-83)

501 CAST-IN-PLACE CONCRETE

501.01 GENERAL

501.01.01 Summary

Section Includes:

- Formwork for cast-in-place concrete with shoring, bracing, and anchorage
- Formwork accessories
- Form stripping
- Reinforcing steel for cast-in-place concrete
- Cast-in-place concrete, including concrete for the following: Concrete curing

501.01.02 Definitions

Unexposed Finish:
A general-use finish with no appearance criteria applicable to all formed concrete concealed from view after completion of construction.

Exposed Finish:
A general-use finish applicable to all formed concrete exposed to view and including surfaces that may receive a paint coating, if any. See Section 413 – Structural Retaining Walls.

501.01.03 Submittals

Product Data:
If requested, submit manufacturer's product data for the following:

- Formwork accessories
- Mechanical connectors for reinforcing steel
- End bearing splices for reinforcing steel
- Concrete admixtures
- Fibrous reinforcement
- Waterstops
- Grout
- Curing compound
- Bonding compound
- Epoxy bonding system

Aggregates:
Submit test reports showing compliance with specified quality and gradation.

Shop Drawings:
Submit shop drawings for fabrication and placement of the following:

Reinforcement:
- Comply with ACI SP-66. Include bar schedules, diagrams of bent bars, arrangement of concrete reinforcement, and splices.
- Show construction joints.
- Include details of reinforcement at openings through concrete structures.
- Include elevations of reinforcement in walls.
- Show stirrup spacing.

Prepare shop drawings under seal of professional Structural Engineer registered in Georgia.

Quality Control Submittals:
Submit the following information related to quality assurance requirements specified:

Design data:

- Submit proposed mix designs and test data before concrete operations begin. Identify for each mix submitted the method by which proportions have been selected
- For mix designs based on trial mixtures, include trial mix proportions, test results, graphical analysis, and show required average compressive strength f(cr)
- Indicate quantity of each ingredient per cubic yard of concrete
- Indicate type and quantity of admixtures proposed or required

Certifications:
Submit affidavits from an independent testing agency certifying that all materials furnished under this section conform to specifications

Certifications:
Provide certification from manufacturers of concrete admixtures that chloride content complies with specified requirements

Certifications:

- Submit mill test certificates for all reinforcing steel furnished under this section, showing physical and chemical analysis.
- Include in chemical analysis for steel to be welded the percentages of carbon, manganese, copper, nickel, and chromium, and optionally the percentages of molybdenum and vanadium.

Certifications:
Submit certifications signed by AWS Certified Welding Inspector (CWI) of prequalified welding procedures, qualifications of welding procedures unless prequalified, qualification of welding operators, and qualification of welders

Certifications:
Provide certification from an independent testing agency that mechanical connectors for reinforcing steel comply with specified requirements

Placement schedule:

- Submit concrete placement schedule prior to start of any concrete placement operations. Include location of all joints indicated on drawings, plus anticipated construction joints

- Submit batch tickets complying with ASTM C 685 or delivery tickets complying with ASTM C 94, as applicable, for each load of concrete used in the work

Cold weather and hot weather concreting:

- Submit description of planned protective measures.

501.01.04 Quality Assurance

Codes and Standards:
Comply with the following documents, except where requirements of the contract documents or of governing codes and governing authorities are more stringent:

- ACI 301
- ACI 318
- ANSI/AWS D1.4
- CRSI Manual of Standard Practice

Qualification of Welds, Welding Operators, and Welders:
Perform welding procedure qualification, except for prequalified procedures, as required by ANSI/AWS D1.4, prior to executing any welding of reinforcing steel. Only AWS qualified welders or welding operators shall perform welding of reinforcing steel

Testing Agency Services:
Engage testing agency to conduct tests and perform other services specified for quality control during construction

Only AWS Certified Welding Inspectors shall be used for tests and qualifications associated with welding of reinforcing steel

Source of Materials:
Obtain materials of each type from the same source for the entire project

Mock-Ups:
Cast mock-up of size indicated or as required to demonstrate typical joints and proposed texture and color, using specified concrete and formwork. Upon acceptance of visual qualities, maintain sample panel exposed to view for duration of concrete work

501.01.05 Delivery, Storage, and Handling

Materials shall be delivered, handled, and stored in accordance with the specific manufacturer's recommendations.

501.01.06 Project Conditions

Cold-Weather Concreting:
Comply fully with the recommendations of ACI 306.

Well in advance of proposed concreting operations, advise of planned protective measures including but not limited to heating of materials, heated enclosures, and insulating blankets.

Hot-Weather Concreting:
Comply fully with the recommendations of ACI 305R.

Well in advance of proposed concreting operations, advise of planned protective measures including but not limited to cooling of materials before or during mixing, placement during evening to dawn hours, fogging during finishing and curing, shading, and windbreaks.

501.02 PRODUCTS

501.02.01 Formwork

Facing Materials

Unexposed finish concrete:
Any standard form materials that produce structurally sound concrete.

Exposed finish concrete:
Materials selected to offer optimum smooth, stain-free final appearance, and minimum number of joints.

Cylindrical Column Forms:
Weather-resistant tubes of metal, plastic, laminated paper, or fiber.

Formwork Accessories

Form coating:
Form release agent that will not adversely affect concrete surfaces or prevent subsequent application of concrete coatings.

Metal ties:
Commercially manufactured types; cone snap ties, taper removable bolt, or other type which will leave no metal closer than 1½" from surface of concrete when forms are removed, leaving not more than a 1" diameter hole in the concrete surface.

Accessories used with epoxy-coated reinforcing:
Epoxy coated or made of dielectric material or other approved materials.

Fillets:
Wood or plastic fillets for chamfered corners, in maximum lengths possible.

501.02.02 Reinforcing Materials

Reinforcing Bars:
Provide deformed bars complying with the following, except where otherwise indicated ASTM A 615, Grade 60.Do

Provide corrosion-protected bars in locations indicated:
Epoxy-coated reinforcing bars: ASTM A 775.

Reinforcing Bar Mats:
ASTM A 184, clipped type.

Provide mechanical connections for reinforcement splices of the type indicated and capable of developing at least 125% of the specified yield strength of the bar when tested in tension and compression.

Provide end-bearing splices complying with ACI 318 and of the type indicated.

Welded Wire Fabric:
ASTM A 185, cold-drawn steel, plain.

Reinforcing Accessories
Tie wire:
Black annealed type, 16½ gauge or as specified.

Supports:
Bar supports as specified conforming to specifications of CRSI "Manual of Standard Practice."

501.02.03 Concrete Materials

Portland Cement:
ASTM C 150, Type I, except where other type is specifically permitted or required

Fly Ash:
ASTM C 618, Type C or F

Water:
Potable

Aggregates:
Normal weight concrete: ASTM C 33

Maximum size of coarse aggregates, whichever is least

Admixtures - General:
Admixtures that result in more than 0.1% of soluble chloride ions by weight of cement are prohibited.

Air-Entraining Admixture:
ASTM C 260 and certified by manufacturer for compatibility with other mix components

Water-Reducing, Retarding Admixture:
ASTM C 494, Type D

Water-Reducing and Accelerating Admixtures:
ASTM C 494, Type E

High-Range Water-Reducing Admixture (Superplasticizer): ASTM C 494, Type F or G

Fibrous Reinforcement:
Polypropylene fibers designed and engineered specifically for secondary reinforcement of concrete

501.02.04 Miscellaneous Materials and Accessories

Reglets:
Provide reglets of not less than 26 gauge galvanized steel sheet at locations indicated. Temporarily fill reglets or cover openings to prevent intrusion of concrete or debris during installation.

Waterstops, General:
Provide waterstops at construction joints and as otherwise indicated, sized, and configured to suit joints.

Conform to ACI 301, paragraph 6.3

Vapor Retarder:
Membrane for installation beneath slabs on grade, resistant to decay when tested in accordance with ASTM E 154, and as follows:

Polyethylene sheet, not less than eight mils thick

Non-shrink Grout:
CRD-C 621, Grade B
Type: Provide nonmetallic type only
Burlap:
AASHTO M 182, Class 2 jute or kenaf cloth

Moisture-Retaining Cover:
ASTM C 171, and as follows:

Waterproofed paper
Polyethylene film
Polyethylene-coated burlap

501.02.05 Liquid Curing Compounds

Material - curing compounds:
Comply with ASTM C 309, Type 1

Non-yellowing formulation where subject to ultraviolet light

Underlayment Compound:
Self-leveling cementitious compound designed for pumping.

Bonding Compound:
Non-redispersable acrylic bonding admixture, ASTM C 1059, Type II.

Epoxy Bonding Systems:
ASTM C 881; type, grade, and class as required for project conditions.

Expansion Joint Filler:
Non-extruding bituminous type: ASTM D 1751.

Manhole Frame and Covers:
See Section 502.02.01.

501.02.06 Concrete Mix Design

Review:
Do not begin concrete operations until proposed mix has been reviewed and approved by the owner.

Proportioning of Normal Weight Concrete:
Comply with recommendations of ACI 211.1.

Required Average Strength:
Establish the required average strength f(cr) of the design mix on the basis of trial mixtures as specified in ACI 301, and proportion mixes accordingly.

Specified Compressive Strength f'(c) at 28 Days for locations as indicated on drawings:
Fill grout: 2000 psi
Walks and Drives: 3000 psi
Water retaining structures: 3000 psi

Fly Ash:
A portion of the Portland Cement may be replaced with fly ash up to a maximum of 25% by weight of cement plus fly ash.

Fibrous Reinforcement:
Add to mix at rate of 1.5 pounds per cubic yard of concrete, or as otherwise recommended by manufacturer for specific application.

Admixtures:
Use as specified.

Mix Adjustments:
Adjustment to approved concrete mixes may be requested when circumstances require.

501.02.07 Control of Mix in the Field

Slump:
A tolerance of up to 1" above approved design mix slump will be permitted for one batch in five consecutive batches tested.

Total Air Content:
A tolerance of + or - 1½% of approved design mix air content will be allowed for field measurements.

501.02.08 Concrete Mixing

On-Site Equipment:
Mix concrete materials in appropriate drum-type batch machine mixer in compliance with ASTM C 685.

Transit Mixers:
Mix concrete materials in transit mixers complying with requirements of ASTM C 94.

501.03 EXECUTION

501.03.01 Concrete Form Preparation

General:
Comply with requirements of ACI 301 for formwork, and as herein specified.

Design:
Design and fabricate forms, as required.

Construction:
Construct and brace formwork to accurately achieve end results required by contract documents.

Tolerances for Formed Surfaces:
Comply with minimum tolerances established in ACI 117, unless more stringent requirements are indicated on the drawings.

Release Agent:
Provide either form materials with factory-applied non-absorptive liner or field-applied form coating.

501.03.02 Connection to Existing Concrete

Preparation:
At locations where new concrete is to join existing concrete, prepare existing surface by cleaning and applying bonding compound in accordance with manufacturer's instructions.

Doweled Connections:
At locations where new concrete is doweled to existing work, drill holes in existing concrete, insert steel dowels, and pack solid with non-shrink grout.

501.03.03 Vapor Retarder Installation

General:
Place vapor retarder sheet over prepared base materials specified.

501.03.04 Placing Reinforcement

General:
Comply with requirements of ACI 301 and as herein specified.

Preparation:
Clean reinforcement of materials that adversely affect bond with concrete.

Placement:
Place reinforcement to achieve not less than minimum concrete coverage required for protection. Accurately position, support, and secure reinforcement against displacement.

Welding:
Welding of reinforcement is not permitted.

501.03.05 Joint Construction

Construction Joints:
Locate and install construction joints as indicated on drawings. If construction joints are not indicated, locate in a manner, which will not impair the strength and will have least impact on appearance.

Isolation Joints:
Construct isolation joints in slabs poured on grade at points of contact with vertical components.

Expansion Joints:
Construct expansion joints where indicated. Install expansion joint filler to full depth of concrete.

Control Joints:
Construct contraction joints in slabs poured on grade to form panels of sizes indicated on drawings.

501.03.06 Installation of Embedded Items

General:
Set anchorage devices and other items required for other work connected to or supported by cast-in-place concrete, using templates, setting drawings, and instructions from suppliers of items to be embedded.

501.03.07 Concrete Placement

Preparation:
Provide materials necessary to ensure adequate protection of concrete during inclement weather before beginning installation of concrete.

Inspection:
Before beginning concrete placement, inspect formwork, reinforcing steel, and items

to be embedded, verifying that all such work has been completed.

Placement - General:
Comply with requirements of ACI 304.

Placement in Forms:
Limit horizontal layers to depths that can be properly consolidated, but in no event greater than 24".

Slab Placement:
Schedule continuous placement and consolidation of concrete within planned construction joints.

Cold Weather Placement:
Comply with recommendations of ACI 306 when air temperatures are expected to drop below 40°F either during concrete placement operations or before concrete has cured.

Hot Weather Placement:
Comply with recommendations of ACI 305R when ambient temperature before, during, or after concrete placement is expected to exceed 90°F.

501.03.08 Finishing Formed Surfaces

Repairs, General:
Repair surface defects, including tie holes, immediately after removing formwork.

Unexposed Form Finish:
Repair tie holes and patch defective areas.

Exposed Form Finish:
Repair and patch defective areas with fins or other projections completely removed and smoothed.

501.03.09 Finishing Slabs

Finishing Operations - General:
Do not directly apply water to slab surface or dust with cement.

Use hand or power equipment only as recommended in ACI 302.1R.

Screeding:
Strikeoff to required grade and within surface tolerances indicated.

Bull Floating:

- Immediately following screeding, bull float or darby before bleed water appears to eliminate ridges, fill in voids, and embed coarse aggregate.

- Do not perform subsequent finishing until excess moisture or bleed water has disappeared and concrete will support either foot pressure with less than 1/4" indentation or weight of power floats.

Final floating:
Float to embed coarse aggregate, to eliminate ridges, to compact concrete, to consolidate mortar at surface, and to achieve uniform, sandy texture.

Troweling:
Trowel immediately following final floating.

Coordinate appearance and texture of required final finish with the County before application:

Float Finish:
As specified above.

Broomed Float Finish:
After floating and when water sheen has practically disappeared, apply uniform transverse corrugations approximately 1/16" deep, without tearing surface.

Trowel Finish:
As specified above.

Trowel and Fine Broom Finish:
Follow trowel finishing operation immediately with fine brooming to achieve slightly scarified surface.

Slab Surface Tolerances:
Achieve flat, level planes except where grades are indicated.

Floated finishes:
Depressions between high spots shall not exceed 5/16" under a 10' straightedge.

Troweled finishes:
Achieve a level surface plane so that depressions between high spots do not exceed 1/4" under a 10' straightedge.

Repair of Slab Surfaces:
Test slab surfaces for smoothness and to verify surface plane to tolerance specified and repair defects.

501.03.10 Concrete Curing and Protection

General:

- Prevent premature drying of freshly placed concrete and protect from excessively cold or hot temperatures until concrete has cured.
- Provide curing of concrete by one of the methods listed and as appropriate to service conditions and type of applied finish in each case.

Curing Period:

- Not less than seven days for standard cements and mixes.
- Not less than four days for high early strength concrete using Type III cement.

Formed Surfaces:
Cure formed concrete surfaces by moist curing with forms in place for full curing period or until forms are removed.

Surfaces Not in Contact with Forms:

- Start initial curing as soon as free water has disappeared, but before surface is dry.
- Keep continuously moist for not less than three days.
- Begin final curing procedures immediately following initial curing and before concrete has dried. Apply curing compound at rate stated by manufacturer to conform to moisture-retention requirements specified. Use curing compounds only in locations permitted or required.
- Avoid rapid drying at end of curing period.
- During and following the curing period, protect concrete from temperature changes of adjacent air in excess of 5°F per hour and 50°F per 24 hours.

501.03.11 Shores and Supports

General:
Comply with recommendations of ACI 347 for shoring and re-shoring.

Re-shoring:
To avoid damage to partly cured concrete, remove shores and re-shore in a planned sequence. Locate and provide adequate re-shoring to safely support work without excessive stress or deflection.

501.03.12 Removal of Forms and Supports

Non-Load-Bearing Formwork:
Provided that concrete has hardened sufficiently that it will not be damaged, forms not actually supporting weight of the concrete or weight of the soffit forms may be removed after concrete has cured at not less than 50°F for 24 hours.

Load-Bearing Formwork:

- Do not remove shoring and forms supporting weight of concrete, such as beam soffits, joists, slabs, and other structural elements, until concrete has attained at least the specified compressive strength f'(c) and until the actual compressive strength attained is adequate to support the weight of the concrete and superimposed loads.
- Keep reshores in place for a minimum of 15 days after placing upper tier, and longer if required, until concrete has attained at least the specified compressive strength f'(c) and until the actual compressive strength attained is adequate to support the weight of the concrete and superimposed loads.
- Keep supports in place until heavy loads due to construction operations have been removed.
- Test field-cured specimens to determine potential compressive strength of concrete for specific locations.

501.03.13 Miscellaneous Concrete Items

Fill-in:
Fill in holes and openings left in concrete structures for passage of work by other trades after such work is complete.

Equipment Bases and Foundations:

- Provide machine and equipment bases and foundations, as indicated on drawings. Set anchor bolts at correct elevations, complying with diagrams or templates of equipment manufacturer.
- Grout base plates and foundations as indicated with non-shrink grout.
- Use nonmetallic grout for exposed conditions, unless otherwise indicated.

501.03.14 Concrete Repairs

Perform cosmetic repairs of concrete surfaces as specified under concrete application.

Perform structural repairs with prior approval of the County for method and procedure, using epoxy bonding systems.

501.03.15 Quality Control Testing During Construction

Composite Sampling and Making and Curing of Specimens:
ASTM C 172 and ASTM C 31.

Slump:
ASTM C 143. One test per strength test and additional tests, if concrete consistency changes.

Air Content of Normal Weight Concrete:
ASTM C 173 or ASTM C 231.

Concrete Temperature:

- Test hourly when air temperature is 40°F or below.
- Test hourly when air temperature is 90°F or above.
- Test each time a set of strength test specimens is made.

Compressive Strength Tests:
ASTM C 39.

Compression test specimens:
Mold and cure one set of four standard cylinders for each compressive strength test required.

Testing for acceptance of potential strength of as-delivered concrete:
Obtain samples on a statistically sound, random basis.

Minimum frequency:

- One set per 100 cubic yards or fraction thereof for each day's pour of each concrete class.
- One set per 3,500 square feet of slab or wall area or fraction thereof for each day's pour of each concrete class.
- When less than five cubic yards is placed in one day, laboratory testing of specimens may be waived if adequate evidence of satisfactory strength is provided.
- When the above testing frequency would provide fewer than five strength tests for a given class of concrete during the project, conduct testing from not less than five randomly selected batches, or from each batch if fewer than five.
- Test one specimen per set at seven days for information unless an earlier age is required.
- Test two specimens per set for acceptance of strength potential; test at 28 days unless other age is specified.
- Retain one specimen from each set for later testing, if required.
- Strength potential of as-delivered concrete will be considered acceptable if all of the following criteria are met:
  - No individual test result falls below specified compressive strength by more than 500 psi.
  - Not more than 10% of individual test results fall below specified compressive strength f'(c).
  - Average of any three consecutive strength test results equals or exceeds specified compressive strength f'(c).
- Evaluate construction and curing procedures and implement corrective action when strength results for field-cured specimens are less than 85% of test values for companion laboratory-cured specimens.

Removal of forms or supports:
Mold additional specimens and field-cure with concrete represented; test to determine strength of concrete at proposed time of form or support removal.

Test Results:
Testing agency shall report test results in writing to Developer and, if requested, to the County within 24 hours of the test.

Test reports shall contain the following data:

- Project name, number, and other identification.
- Name of concrete testing agency.
- Date and time of sampling.
- Concrete type and class.
- Location of concrete batch in the completed work.
- All information required by respective ASTM test methods.
- Nondestructive testing devices, such as impact hammer or sonoscope, may be used at the County's option for assistance in determining probable concrete strength.
- The testing agency shall make additional tests of in-place concrete as directed by the County.

502 PRECAST CONCRETE STRUCTURES

502.01 PRODUCTS

502.01.01 Precast Concrete Manholes

Precast concrete manhole base barrel and top sections shall conform to Specifications for Precast Reinforced Concrete Manhole Sections, ASTM Designation C478, except as otherwise specified below. The method of construction shall conform to the Standard Details and the following additional requirements:

Barrel sections shall have tongue and groove joints. Joints shall have flexible plastic gaskets (Ram-Nek or equal) meeting Federal Specifications SS-S210A "Sealing Compound, Preformed Plastic for Pipe Joints", Type I, Rope Form and AASHTO designation M-198 751, Type B, Flexible Plastic Gasket (Bitumen) are also acceptable.

Type I cement shall be used, except as otherwise approved.

The date of manufacture and the name or trademark of the manufacturer shall be clearly marked on the inside of each precast section. Each section of the manhole must be inspected and stamped by an accredited testing laboratory.

Sections shall be cured by an approved method for at least 28 days.

Top sections shall be eccentric except precast concrete slabs shall be used where cover over the top of the pipe is less than four feet for all manholes.

Precast concrete slabs over top section, where required, shall be capable of supporting the overburden plus a live load equivalent to AASHTO H-20 loading.

Manhole steps shall be cast into the precast sections and shall conform to ASTM Specification C478. Steps shall be Plastic Step by M. A. Industries, Inc., or equal.

Holes in precast sections to receive sewer pipe shall be precast at the factory at the required locations. All precast holes shall have Kor-N-Seal (or equal) rubber boots.

The tops of bases shall be suitably shaped to mate with the precast barrel section.

All manholes, except those located in paved areas or where precise adjustment of top elevation is required, shall be furnished with the cover frame cast into the top section.

Cast iron frames and covers shall be East Jordan Iron Works Model V-1480, standard; V-2480, boltdown watertight; U.S. Foundry Model 360-E, standard; 360-E/BWT, boltdown watertight; or equal.

502.02 EXECUTION

502.02.01 Installation

The base shall be placed on a thoroughly compacted gravel sub-base.

Precast concrete structure sections shall be set to be vertical and with sections in true alignment with a 1/4" maximum tolerance to be allowed.

Holes in the concrete pipe sections required for handling or other purposes shall be plugged with a non-shrinking grout.

Where holes must be cut in the precast sections to accommodate pipes, coring shall be done prior to setting them in place.

Manholes shall have an invert channel constructed of concrete and shaped to correspond with the lower half of the pipe. The top of the shelf shall be sloped to drain toward the flowing through channel. Concrete shall have smooth, hard, steel-trowel finished surface.

Cast iron frames shall be placed, shimmed, and set in Portland cement mortar to the required grade. No more than three courses of leveling rings shall be used.

503 WATER SPECIFICATIONS

503.01 PRODUCTS

503.01.01 General

All materials shall be of standard manufactured design that the manufacturer recommends for the service intended in accordance with AWWA or ASTM Standard Specifications.

All pipe and appurtenances shall be of the size shown on the approved plans and all equipment of the same type shall be from one manufacturer.

Pipe materials shall be as follows:

Mains (public) 4" and larger, ductile iron

Mains (private) 6" and larger, ductile iron

Service Lines, ¾" and larger, copper

503.01.02 Ductile Iron Pipe and Fittings

Ductile iron pipe shall be of the centrifugally cast type, either in metal or cast molds, and shall conform to ANSI A21.51 or AWWA C151. Ductile iron shall have a minimum tensile strength of 60,000 psi with a minimum yield strength of 42,000 psi, pressure rated at a minimum of 350 PSI and have a minimal wall thickness of ¼" unless field conditions determine that a heavier wall thickness is required. The pressure rating and manufacture date shall be shown on each piece. All pipes shall be furnished complete with all necessary glands, joint materials including rubber gasket lubricant, bolts, nuts, etc. Pipe furnished shall be manufactured by U.S. Pipe and Foundry; American Cast Iron Pipe; or equal in industry standard lengths.

All ductile iron joints used, unless otherwise noted, shall be push-on joint or as specified and shall meet the requirements of ANSI Specifications A 21.11 or AWWA C111, latest revisions.

Fittings:

All pipe fittings shall be ductile iron compact mechanical joint fittings conforming to ANSI/AWWA C153/A21.53. Rubber gasket joints shall conform to ANSI Specification A 21.11. Bolts shall be low alloys, high strength, equal to “Acipally”, “Usalloy”, or “Corten” bolts.

Coatings And Linings:

Pipe and fittings shall have a cement mortar lining and a bituminous seal coat on the inside in accordance with ANSI A21.4 and be coated on the exterior with a 1.0 mils thick bituminous coat in accordance with ANSI A21.51. A ceramic coating shall be substituted for the cement mortar lining where shown on the drawings.

Polyethylene Encasement:
A double layer of polyethylene encasement shall be provided over pipe, fittings, and valves when installed in close proximity to steel natural gas piplines. The material, installation, and workmanship shall conform to applicable sections of ANSI Standard A21.5. Installation shall be employed using flat tube polyethylene.

503.01.03 Copper Pipe

All copper pipes shall conform to Federal Specifications WW-T-799, Type "K" as a minimum with plain ends. Fittings and connections for pipe sizes of 1-inch and less shall be of the flared type. Pipe sizes greater than 1-inch shall have compression fittings and connections.

503.01.04 Copper Tubing

All copper tubing shall conform to ASTM Designation B88 for the Type "K" Soft Temper and AWWA 7S-CR Type "K." Fittings and connections for pipe sizes of 1-inch and less shall be of the flared type. Pipe sizes greater than 1-inch shall have compression fittings and connections.

503.01.05 Gate Valves

All valves 3" to 16" in diameter shall be iron-body resilient-seated gate valves non-rising stems conforming to the requirements of AWWA Specification C-509 rated for a design working pressure of 200 psig. Sizes smaller than three inches shall meet Federal Specification WW-V-54, Class "A", rated for 200 psi working pressure. Gate valves shall be as manufactured by Dresser, Mueller, Darling, Clow Corporation, Kennedy, Walworth, or similar approved equal.

503.01.06 Air/Vacuum Release Valves

The valves shall have a cast iron body, cover and baffle, stainless steel float, bronze water diffuser, and Buna-N seat with threaded fittings. The valves shall be manufactured by GA Industries, APCO Valve and Primer Corporation, or equal.

503.01.07 Corporation Stops

Corporation stops shall be all brass or bronze suitable for 200 psi operating pressure and similar to Mueller Co. H-15000 or Hays 5200.

503.01.08 Valve Boxes, Valve Assemblies, Valve Pads

Valve boxes shall be cast iron two or three piece with cast iron covers. The barrel shall be one or two-piece, screw type, having 5¼" shaft. Covers shall have "WATER" cast into the top. Valve stem extensions shall be provided and installed for all valves where the operating nut is 5 feet or deeper. Where directed, valve assemblies shall include fully adjustable valve box and extension stem combinations equal to American Flow Control "Trench Adapter". Concrete Valve pads/collars are required for all valve boxes not in a paved area. Concrete valve markers shall be furnished and installed on existing roads where directed by Cobb County.

503.01.09 Flexible (Transition) Couplings

Flexible couplings shall be Catalog No. 441 as manufactured by Smith-Blair, Style No. 38, as manufactured by Dresser Manufacturing Company or equal.

503.01.10 Fire Hydrants

Fire hydrants shall conform to AWWA C502-85 for dry-barrel fire hydrants. Hydrants shall be traffic types with safety flange, which allows the valve to remain closed when the hydrant is broken or damaged above or near grade level. The design of hydrant shall be of the compression type with main valves and “O” ring seal between the operating nut and the bonnet. Hydrant color shall be silver.

Hydrant inlet shall be 6", mechanical joint with harnessing lugs. Hydrant main valve opening shall be 5¼". Valve seats shall be bronze to bronze.

Operating nut shall be solid pentagon, 1½" measured flat at point (31/32 on side). Operating nut shall turn counter clockwise to open.

Hydrant shall have two 2½" diameters and one 4½" diameter nozzles. Nozzle threads shall be the standard adopted by NBFU. Nozzles shall all have gasket caps fitted with chain.

The following fire hydrants are approved for installation in Cobb County:

Manufacturer	Model
American AVK	Models 2700 and 2780
Mueller	Centurion & Improved
U. S.	Metro 250 Sentinal
Kennedy	K81-A
M&H	Models 129 and 929
Clow	Medallion
American-Darling	B-62B

Materials shall conform to AWWA Standard C-502, latest revision.

503. 01.11 Curb Stops

Curb stops shall be of bronze construction with tee handle operator. Curb stops shall be Hays 5060 or approved equal.

503. 01.12 Tapping Sleeves

Tapping sleeves shall be Class 250 pipe for 200 psi cold water working pressure. Sleeves shall be M & H Fig. #74-M, Mueller #H-615, or approved equal.

503. 01.13 Tapping Saddles

Double Strap Saddles: Saddles shall be either Smith Blair 313 Double Strap or Superior Style 32 or equal.

503.01.14 Adapters and Unions

Copper female iron pipe adapters shall be Hays 5600 CF or approved equal in Mueller. Copper by copper unions shall be Hays 5615 CF or approved equal in Mueller. Copper by male iron pipe adapters shall be Hays 5605 or equal in Mueller.

503.02 EXECUTION

503. 02.01 General

The Water System Inspector shall be notified 24 hours prior to construction beginning on water facilities. All pipe and fittings may be inspected by the Water System at the site of manufacture for compliance with these specifications.

Contractors must have a set of the original "Approved" plans at all times on the job site. These plans shall be kept current by the contractor in regards to field changes.

Care shall be taken in loading, transporting, and unloading to prevent injury to the pipe or coatings. Pipe or fittings shall not be dropped. All pipe or fittings shall be examined before laying, and no piece shall be installed which is found to be defective. Any damage to the pipe coatings shall be repaired as directed by the Water System.

Pipe and fittings shall be subjected to a careful inspection just prior to being laid or installed. If any defective pipe is discovered after it has been laid, it shall be removed and replaced with a sound pipe in a satisfactory manner. All pipe and fittings shall be thoroughly cleaned before laying, shall be kept clean until they are used in the work, and when installed or laid, shall conform to the lines and grades required.

Unless specifically indicated otherwise, underground piping shall slope uniformly between joints.

When constructing piping, exercise extreme care to protect all existing underground utilities, and all existing structures from damage. Any damage to existing utilities or structures shall be repaired or replaced and restored equal to or better than pre-construction conditions.

503.02.02 Connection to Work by Others or Existing Lines

For existing lines or lines installed under other contracts to which new piping must connect, expose buried lines to confirm or determine end connection details, pipe material and diameter, and furnish and install appropriate piping, and make proper connections. Design shall include the requirements of Section 410.05.

The Water System Inspector must be notified at least 24 hours prior to connecting to any County lines.

503.02.03 Installation

Pipe and fittings shall be installed as shown on the Standard Details and in accordance with requirements of AWWA Standard Specifications except as otherwise provided herein. A firm, even bearing throughout the length of the pipe shall be constructed by tamping selected material at the sides of the pipe up to the springline. **BLOCKING SUPPORTS WILL NOT BE PERMITTED**. Bell holes shall be hand excavated to insure uniform bearing along the pipe barrel.

All pipes shall be sound and clean before laying. When laying is not in progress, including lunchtime, the open ends of the pipe shall be closed by watertight plug or other approved means. Good alignment shall be preserved in laying. The deflection at joints shall not exceed that recommended by manufacturer.

When cutting pipe is required, the cutting shall be done by machine, leaving a smooth cut at right angles to the axis of the pipe. Cut ends of pipe to be used with a bell shall be beveled to conform to the manufactured spigot end. Lining shall be undamaged.

Push-on joints shall be made in strict accordance with the manufacturer's instructions. Pipe shall be laid with bell ends looking ahead. A rubber gasket shall be inserted in the groove of the bell end of the pipe, and the joint surfaces cleaned and lubricated. The plain end of the pipe is to be aligned with the bell of the pipe to which it is to be joined, and pushed home with a jack or by other means. After joining the pipe, a metal feeler shall be used to make certain that the rubber gasket is correctly located.

Unless otherwise noted, underground ductile iron piping shall be push-on with mechanical joint fittings, valves, fire hydrants, etc.

Regulate equipment and construction operations such that the loading of the pipe does not exceed the loads for which the pipe is designed and manufactured. Any pipe damaged during construction operations shall be replaced.

503.02.04 Pipe Supports and Thrust Blocks

All piping shall be properly and adequately supported.

Longitudinal thrust along pressurized pipelines at bends, tees, reducers, and caps/plugs shall be counteracted by enough weight of concrete to counterbalance the vertical and horizontal thrust forces.

Joints shall be protected by felt roofing paper prior to placing concrete thrust block.

Bearing area of thrust blocks shall be adequate to prevent any movement of the fitting and shall be of the size and dimensions as shown on the Standard Details.

Concrete for thrust blocking shall be 3,000-psi minimum. Concrete shall be placed against undisturbed material, and shall not cover joints, bolts, or nuts, or interfere with the removal of any joint. Wooden side forms shall be provided for thrust blocks.

Restrained joints, anchor couplings, rodding, wedge action retainer glands, etc. shall be used in accordance with the Standard Details and/or where specifically indicated.

503.02.05 Pressure and Leakage Tests of Underground Pressure Piping

Hydrostatic pressure and leakage tests shall conform with Section 5 of AWWA C600 Specification. Furnish all gauges, meters, pressure pumps, and other equipment needed to test the line. The pressure gauge used for testing shall be laboratory calibrated suitable for the test pressure required.

The pressure required for the field hydrostatic pressure test shall be 150% of the maximum normal operating pressure of the test section, or the pressure class of the pipe, whichever is greater. Provide temporary plugs and blocking necessary to maintain the required test pressure. Duration of pressure test shall be at least two hours.

A Cobb County Water System Inspector shall observe the pressure and leakage testing.

The leakage test shall be a separate test at the maximum operating pressure as determined by the Water System following the pressure test and shall be of not less than two hours duration. All exposed pipes, fittings, valves, and joints will be carefully examined during the tests and all leaks evident at the surface shall be repaired and leakage eliminated regardless of total leakage as shown by test. Lines which fail to meet tests shall be repaired and retested as necessary until test requirements are complied with. Defective materials, pipes, valves, and accessories shall be removed and replaced. The pipelines shall be tested in such sections as may be directed by the Water System by shutting valves or installing temporary plugs as required. The line shall be filled with water and all air removed and the test pressure shall be maintained in the pipe for the entire test period by means of a force pump. Accurate means shall be provided for measuring the water required to maintain this pressure. The amount of water required is a measure of the leakage.

The amount of leakage, which will be permitted, shall be in accordance with AWWA C600 Standards for all pressure lines. No pipe installation will be accepted if the leakage is greater than that determined by the following formula:

$$L = \frac{SD\sqrt{P}}{148{,}000}$$

“L” is the allowable leakage, in gallons per hour; “S” is the length of pipe tested, in feet; “D” is the nominal diameter of the pipe, in inches; and “P” is the average test pressure during the leakage test, in pounds per square inch gauge.

All visible or confirmed leaks are to be repaired regardless of the allowance used for testing.

Submit the plan for testing to the Water System Inspector for review at least three days before starting the test. Remove and adequately dispose of all temporary blocking material and equipment after completion and acceptance of the field hydrostatic test. Any damage to the pipe coating shall be repaired. Lines shall be totally free and clean prior to final acceptance.

503.02.06 Cleaning Mains

At the conclusion of the work, and prior to pressure testing and disinfection, thoroughly clean the new pipe line by flushing with water or other means to remove all dirt, stones, pieces of wood, or other materials, which may have entered during the construction period. If obstructions remain after this cleaning, they shall be removed.

Flushing of pipelines shall be performed in a manner to protect the environment as well as physical features from the impacts of the discharge of water. Hoses, diffusers, or other devices shall direct or dissipate pressure impacts to structures, ground surfaces, roadways, etc. Dechlorination of discharge flow is mandatory prior to allowing it to enter any water or storm drainage network subsequently discharging into an active stream.

503.02.07 Disinfection

Upon completion of the pressure and leakage test, the pipe shall be disinfected.

Disinfection shall be accomplished by the continuous feed chlorination method in accordance with AWWA C651. The following steps shall be employed:

- Begin filling main at a constant, measured rate with potable water. As water first flows in, begin adding chlorine at a point no more than ten feet from the beginning of the new main.
- Add chlorine at a rate to attain a 25 mg/1 chlorine concentration. The acceptable method is by preparing a 1% solution with sodium hypochlorite or calcium hypochlorite. The required amount of chlorine to produce a 25 mg/1 concentration in 100 feet of pipe is as follows:

Pipe Diameter	100% Chlorine (lb.)	1% Chlorine Solutions (gal.)
4	.013	0.16
6	.030	0.36
8	.054	0.65
10	.085	1.02

12	.120	1.44
16	.217	2.60
18	.275	3.30
20	.339	4.06
24	.488	5.85

- Continue adding chlorine at a rate to attain a minimum concentration of 25 mg/1. Measure the rate at regular intervals as given in AWWA M12 or with a high range test kit. Chlorine application shall continue until the entire main is filled.
- The chlorinated water shall be retained in the water main for a minimum of 24 hours. At the end of the 24-hour period, the water in all portions of the main shall have a minimum chlorine residual of 10 mg/1.

The heavily chlorinated water shall be dechlorinated and lushed in a manner which is not detrimental to the environment. The method proposed shall be submitted to and approved by the Water System Inspector prior to discharge. Final flushing shall continue until the chlorine residual is less than 2 mg/1.

Coordinate sampling with the Cobb County-Marietta Water Authority (CCMWA) no earlier than 16 hours after final flushing. The CCMWA will obtain bacteriological samples for testing.

If bacteriological test results are unsatisfactory, the main shall either be flushed with potable water or re-disinfected prior to obtaining additional samples. Satisfactory bacteriological test results shall be obtained prior to placing the new main in service.

503.02.08 Final Inspection

When the work is complete and tested, a final inspection shall be scheduled with the Water System Inspector. The water line testing records shall be provided to the Water System Inspector prior to the final inspection. The Water System Inspector shall prepare a punch list of any items that must be corrected prior to Water System approval of the project. The Water System Inspector shall be notified when the punch list items have been completed.

504 SANITARY SEWER

504.01 PRODUCTS

504.01.01 Ductile Iron Pipe and Fittings

Pipe:

Ductile iron pipe shall be of the centrifugally cast type, either in metal or cast molds, and shall conform to ANSI A21.51 or AWWA C151. Ductile iron shall have a minimum

tensile strength of 60,000 psi with a minimum yield strength of 42,000 psi, and not less than 0.25 inches wall thickness. All pipe shall be furnished in industry standard lengths complete with all necessary glands, joint material, including rubber gaskets lubricant, bolts and nuts, etc. Pipe furnished shall be as manufactured by U.S. Pipe and Foundry and American Cast Iron Pipe; or equal.

Joints:
All ductile iron pipe used for below-grade service in the project shall have push-on joints and shall meet the requirements of ANSI A21.11 OR AWWA C151, latest revisions. Ductile iron pipe used in the project for above-ground service or in below-ground vaults shall have flanged joints conforming to the requirements of ANSI A21.15, latest revision.

Fittings:
Mechanical Joint Fittings:
Fittings shall be ductile iron compact fittings conforming to ANSI A21.53. The rubber gasket joints shall conform to ANSI A21.11. Bolts shall be low alloy, high strength equal to “Acipolly”, “Usalloy”, or “Corten” bolts.

Flanged Fittings:
Shall conform to ANSI A21.10 or A21.11 and shall have flanges faced and drilled in conformance with ANSI Standard A21.15. Joints shall be installed with full ring rubber gasket. Bolts shall be low alloy, high strength equal to “Acipolly”, “Usalloy”, or “Corten” bolts.

Coatings and Linings:
Pipe and fittings shall be coated on the exterior with a 1.0 mils thick bituminous coat in accordance with ANSI A21.51.

Pipe and fittings 16-inch diameter and smaller shall have a cement mortar lining and a bituminous seal coat on the inside in accordance with ANSI A21.4.

Pipe and fittings 18-inch diameter and larger shall be lined with a ceramic epoxy complying with ASTM B 117-85 and D714-87, and meeting a standard of quality equal to PROTECTO 401 Ceramic Epoxy Lining manufactured by Induron Coatings, Inc.

504.01.02 Polyvinyl Chloride Pipe
Polyvinyl Chloride (PVC) Pipe for Gravity Sewers shall meet extra strength minimum of SDR-35 in conformance with ASTM D 3034. Pipe and couplings shall be made from Class 12454-B virgin compound, as designated in ASTM D1784.

Joints from PVC pipe shall be of the push-on, bell-and-spigot type. The bell shall consist of an integral wall section with a solid cross-section elastomeric ring which shall meet requirements of ASTM D3212. Gaskets shall be factory installed and meet the requirements of ASTM F477.

504.01.03 Other Pipe Material

Other pipe materials for 10" interceptors and larger must be approved by the Cobb County Water System.

504.01.04 Transition Couplings

Manufactured specialty transition couplings shall be utilized at locations to connect gravity sewer piping of different materials. Couplings shall be specially sized to address the variations in pipe diameters, and wall thicknesses.

Rigid PVC (C900 DR18 Class 150) transition couplings as manufactured by HARCO Corporation (Product No. 337), Specified Fittings, Inc., or mechanical joint, compact style, ductile iron solid sleeves (with appropriate transition gaskets) shall be the manner of connection. In the event of pipe materials which do not allow either of these types of transition couplings, flexible, one-piece, molded neoprene sleeve (with series 300 stainless steel clamps) couplings by Fernco (or equal) shall be provided and installed with a full concrete encasement around the pipe and coupling and extending a minimum of one-foot beyond each end of the coupling.

504.02 EXECUTION

504.02.01 General

The Water System Inspector shall be notified 24 hours prior to construction beginning on sewer facilities. All pipe and fittings may be inspected by the Water System at the site of manufacture for compliance with these specifications.

Contractors must have a set of the original "Approved" plans at all times on the job site. These plans shall be kept current by the Contractor in regard to field changes.

Care shall be taken in loading, transporting, and unloading to prevent injury to the pipe or coatings. Pipe or fittings shall not be dropped. All pipe or fittings shall be examined before laying, and no piece shall be installed which is found to be defective. Any damage to the pipe coatings shall be repaired as directed by the Water System Inspector.

Pipe and fittings shall be subjected to a careful inspection just prior to being laid or installed. If any defective pipe is discovered after it has been laid, it shall be removed and replaced with a sound pipe in a satisfactory manner. All pipe and fittings shall be thoroughly cleaned before laying, shall be kept clean until they are used in the work, and when installed or laid shall conform to the lines and grades required.

Unless specifically indicated otherwise, underground piping shall slope uniformly between joints.

Exercise extreme care when constructing piping to protect all existing underground utilities and all existing structures from damage. Any damage to existing utilities or structures shall be repaired or replaced and restored equal to or better than pre-construction conditions.

504.02.02 Connection to Work by Others or Existing Lines

For existing lines or lines installed under other contracts, to which new piping must connect, expose buried lines to confirm or determine end connection details, pipe material and diameter, furnish and install appropriate piping, and make proper connections.

The Water System Inspector must be notified at least 24 hours prior to connecting to any County lines.

When connecting to existing active sewer lines, either at an existing manhole or with a new doghouse manhole, the newly installed sewer line shall be plugged with a temporary plug. This plug will remain in place until the successful completion of the Post Paving Inspection and will only be removed under authorization of the Water System Inspector.

504.02.03 Installation

Sanitary sewers shall be installed to the lines and grades indicated on the approved drawings. No deviation from the designed alignment and/or grades and elevation shall be made without prior approval of the Cobb County Water System.

A pipe laser shall be used for horizontal and vertical control of the sewer pipe installation. Also, elevation measurements shall be made with surveying instruments at least at each manhole to verify the accuracy of grades. These measurements shall be recorded in the Contractor's daily report and made available to the Water System Inspector upon request. The Water System Inspector shall be notified immediately of any variations from design grades.

Pipe and fittings shall be installed using bedding, as shown on the Standard Details. A firm even bearing throughout the length of the pipe shall be constructed by placing and tamping granular bedding material at the sides of the pipe up to the springline. **BLOCKING WILL NOT BE PERMITTED**. Bell holes shall be hand excavated to insure uniform bearing along the pipe barrel.

All pipes shall be sound and clean before installing. When installing is not in progress, including lunchtime, the open ends of the pipe shall be closed by watertight plug or other approved means. Good alignment shall be preserved in laying. The deflection at joints shall not exceed that recommended by manufacturer.

When cutting pipe is required, the cutting shall be done by machine, leaving a smooth cut at right angles to the axis of the pipe. Cut ends of pipe to be used with a bell shall be beveled to conform to the manufactured spigot end. Lining shall be undamaged.

Push-on joints shall be made in strict accordance with the manufacturer's instructions. Pipe shall be laid with bell ends looking ahead. A rubber gasket shall be inserted in the groove of the bell end of the pipe, and the joint surfaces cleaned and lubricated. The plain end of the pipe is to be aligned with the bell of the pipe to which it is to be joined, and pushed home with a jack or by other means. After joining the pipe, a metal feeler shall be used to make certain that the rubber gasket is correctly located.

Unless otherwise noted, underground piping shall be push-on.

Carefully regulate equipment and construction operations such that the loading of the pipe does not exceed the loads for which the pipe is designed and manufactured. Any pipe damaged during construction operations shall be replaced.

504.02.04 Bedding of Sewer Pipe

Bedding for all sewer pipes including service laterals, shall be as shown on the Standard Details. Wall thickness design for sewer pipe shall be based on Type 5 Laying Condition as described in ANSI/AWWA C150/A21.50. Bedding shall be defined as that method of bedding trench conduits in which the conduit is set in thoroughly tamped, compacted, granular materials placed to the trench width B and up to the centerline of the conduit. The remainder of the conduit is entirely surrounded to a height of at least one foot above its top by densely compacted backfill carefully placed by hand to completely fill all spaces above and adjacent to the conduit. Compliance with Section 410.060.02 is required.

504.02.05 Utility Tracer System

All sanitary sewer pipelines (both gravity and force main) shall have a utility tracer system installed in accordance with the Standard Details. A continuous, insulated, 12 gauge, solid copper tracer wire shall be placed with the initial backfill. The tracer wire shall continue uninterrupted around manholes. Service lateral stub-outs shall have the same tracer wire installation with a copper-to-copper splice connection to the main tracer wire. Tracer wire shall either wrap around or be taped to the cleanout assembly and shall terminate with a 12-inch coil accessible at the cleanout cover.

Force mains shall have the same tracer system with surface access at every 1,000-foot intervals or selected changes in alignment. Surface access shall occur in a 15-inch diameter cast iron ring and cover (Vestal RMC-15-H, East Jordan Iron Works V-8502, U.S. Foundry 7621, or equal) flush with ground surface accompanied by a reinforced concrete force main marker post, labeled accordingly.

Tracer wire shall be 12 AWG solid copper rated for direct bury with minimum 30 mil polyethylene insulation. All underground splices and connections shall be protected with direct-bury connectors equal to 3M DBY/Y-6 Splice Kits.

A polyethylene, 6-inch wide, yellow warning tape marked "Sewer Line Buried Below" shall be placed in the trench backfill approximately 24-inches above the tracer wire.

504.02.06 Testing of Underground Gravity Sewers

Infiltration of groundwater into sewer line shall not exceed 25 gal/day per inch of diameter per mile of sewer. All confirmed and/or visible leaks shall be repaired whether or not infiltration limits are exceeded.

Air test all gravity lines following completion of construction and pipe cleaning. Furnish all necessary equipment and materials for testing including but not limited to pressure gauges, plugs, pumps, bulkheads, miscellaneous piping, etc. The following procedures shall be used:

- Isolate the test section with required plugs, bulkheads, etc.
- Pressurize the test section to 3.5 psi greater than the average back pressure of groundwater around the sewer (add 0.43 psi to test pressure for each vertical foot that the groundwater is above the top of the pipe).
- Allow 3 minutes for the pressure to stabilize.
- The pressure shall not decrease more than 0.5 psi during the time periods shown:

Time/100'		
Pipe Diameter (Inches)	**Minutes**	**Seconds**
8	1	12
10	1	30
12	1	48
14	2	00
15	2	06
16	2	12
18	2	24
20	2	48
21	3	00
24	3	36
27	4	12
30	4	48
36	6	00

Subject to the approval of the Water System Inspector, an exfiltration test may be used to test the gravity sewer. The maximum allowable exfiltration shall be 25 gpd per inch diameter per mile when subjected to a test pressure of 10' of water head, or the pressure from filling manholes to their top, whichever is less.

All PVC pipe must pass a 5% deflection test as follows: Not before 30 days after pipe is laid and backfill placed, test the pipe for deflection. A mandrel, sized to permit up to 5% deflection, shall be used.

SDR-35 PVC PIPE			
Nominal Pipe Size	Average Inside Diameter	Base Inside Diameter	5% Deflection Mandrel
6	5.893	5.742	5.45
8	7.891	7.665	7.28
10	9.864	9.563	9.08
12	11.737	11.361	10.79
15	14.375	13.898	13.20

A visual inspection ("lamp test") of each reach of the sewer line will be performed by the Water System Inspector to detect sags or misalignment of the section. A full circle of light must be visible through the pipe between manholes.

The interior of all gravity sewer lines shall be inspected following the completion of all other construction and prior to any street paving, using a Closed Circuit Television (CCTV) camera and documented on Digital Video Disc (DVD). A hard copy of the inspection log and DVD shall be provided to the Water System.

All CCTV inspections shall be performed by personnel trained in accordance with the Pipeline Assessment & Certification Program (PACP) standards as provided by the National Association of Sewer Service Companies (NASSCO) and using PACP Data Standards and nomenclature for documentation, including the specific date and time of the inspection, as well as other points of significance such as tap locations, unusual conditions, infiltration points, and other discernible features.

The camera used for the inspection shall be specifically designed and constructed for such inspection. Lighting for the camera shall be suitable to allow a clear picture of the entire periphery of the pipe. All components of the video system must be capable of producing picture quality that is to the satisfaction of the Water System.

Inspection logs shall include the following information as a minimum:

- Title: Project Name and Project Number
- "Performed for Cobb County Water System"
- Time of day
- Manhole ID (Contract Drawings)
- Manhole to manhole pipe section
- Pipe segment length
- Pipe material
- Pipe diameter
- Direction of camera travel (upstream, downstream)
- Pipe depth
- Operator name
- Tape counter reading at beginning and end of each manhole to manhole pipe segment

DVDs shall be submitted in a format readable with standard viewing software such as Windows Media Player. DVDs that require a specific software program will not be accepted.

If the section fails to meet the infiltration, deflection, visual inspection and/or air test requirements, determine the sources(s) of leakage or deflection and make necessary repairs and retest the repaired section.

Provide all necessary equipment to ensure safe access to perform the visual inspections, including but not limited to oxygen/hazardous gas monitoring devices, ventilation equipment, OSHA approved body harness and lifting apparatus, etc.

504.02.07 Pressure And Leakage Tests Of Underground Pressure Piping

Hydrostatic pressure and leakage tests for sewage force mains shall be conducted using potable water and test procedures conforming with Section 5 of AWWA C600. Furnish all gauges, meters, pressure pumps and other equipment needed to test the line. The pressure gauge used for testing shall be laboratory calibrated suitable for the test pressure required. Submit the plan for testing to the Water System Inspector for review at least three days before starting the test.

The pressure required for the field hydrostatic pressure test shall be 150% of the maximum normal operating pressure of the test section (200 psi minimum), or the pressure class of the pipe, whichever is greater. Provide temporary plugs and blocking necessary to maintain the required test pressure. Corporation cocks at least ¾-inches in diameter, pipe riser and angle globe valves shall be provided at each pipe dead-end and high point in order to bleed air from the line. Duration of pressure test shall be at least 2 hours.

The leakage test shall be a separate test at the maximum operating pressure as determined by the Water System following the pressure test and shall be of not less

than 2 hours duration. All exposed pipes, fittings, valves and joints will be carefully examined during the tests and all leaks evident at the surface shall be repaired and leakage eliminated regardless of total leakage as shown by test. Lines which fail to meet tests shall be repaired and retested as necessary until test requirements are complied with. Defective materials, pipes, valves and accessories shall be removed and replaced. The Line shall be filled with water and all air removed and the test pressure shall be maintained in the pipe for the entire test period by means of a force pump.

Accurate means shall be provided for measuring the water required to maintain this pressure. The amount of water required is a measure of the leakage.

The amount of leakage which will be permitted shall be in accordance with AWWA C600 Standards for all pressure lines. No pipe installation will be accepted if the leakage is greater than that determined by the following formula:

$$L = \frac{SD\sqrt{P}}{148{,}000}$$

In which “L” is the allowable leakage, in gallons per hour; “S: is the length of pipe tested, in feet; “D” is the nominal diameter of the pipe, in inches; and “P” is the square root of the average test pressure during the leakage test, in pounds per square inch gauge.

If a test section fails to meet the infiltration, air, or deflection test requirements, it shall be repaired and retested.

504.02.08 Cleaning Mains

At the conclusion of the Work and prior to pressure testing, thoroughly clean the new pipeline by flushing with water or other means to remove all dirt, stones, and pieces of wood or other material that may have entered during the construction period. The flushing water and debris will be trapped at the last downstream manhole and removed from the system. If, after this clearing, obstructions remain, they shall be removed.

504.02.09 Final Inspection

When the work is complete and tested, a final inspection shall be scheduled with the Water System Inspector.

A record of the low-pressure air and deflection testing will be provided to the Water System Inspector at the final inspection. The record should include the line segment identification, initial air pressure, time interval allowed, the final air pressure, deflection test log, date of tests, and name of the person in charge of testing.

For all sewer segments with slopes less than 1%, the actual grades shall be verified in the presence of the Water System Inspector either prior to or during the final inspection, or prior to the placement of stone base in streets/paved area.

The Water System Inspector shall prepare a punch list of any items that must be corrected prior to Water System approval of the project. The Water System Inspector shall be notified when the punch list items have been completed.

505 STORM DRAINAGE

505.01 MATERIALS

Concrete pipes shall be reinforced within the right-of-way, but may be plain pipe outside of the right-of-way.

Concrete Pipe:
Flat bottom and circular pipe sections shall be laid in a prepared trench with socket ends pointing upstream. Sections may be joined by bituminous plastic cement joints, rubber-type gasket joints, "O" ring gasket joints, or pre-formed plastic gasket joints. In bituminous plastic cement joints, the annular space shall be filled with joint material, and the inside of each joint wiped smooth. Rubber-type, "O" ring, and pre-formed plastic gasket joints shall be installed in accordance with the manufacturer's recommendations.

Metal storm drain pipe shall conform to the following standards:

- ASTM A849-88, and/or
- AASHTO M36/M36M-86, and/or,
- ASTM A760/A760M-85, as appropriate, and as revised and updated, and shall be chosen from the following list:

  Galvanized Corrugated Metal (Steel) Pipe, Bituminous Coated
  Aluminum Corrugated Metal (Steel) Pipe
  Aluminized Corrugated Metal (Steel) Pipe
  Concrete lined Galvanized Corrugated Metal (Steel) Pipe, Bituminous Coated
  Concrete lined Aluminized Corrugated Metal (Steel) Pipe.

NOTE: All corrugated metal pipes (CMP) shall be furnished with rolled ends providing at least two annular corrugations on each end.

505.02 INSTALLATION

Workmanship and finish:
Metal culvert pipe on which the coating has been bruised or broken either in the shop

or in shipping, or which shows defective workmanship, shall be rejected. Among others, the following defects are specified as a constituting poor workmanship and the presence of any or all of them in any culvert pipe shall constitute sufficient cause for rejections:

- Uneven laps
- Elliptical shaping of round pipe (5% out-of-round CMP max allowed)
- Variation from a straight center line
- Ragged or diagonal sheared edges
- Loose, unevenly lined or spaced rivets
- Poorly formed rivet heads
- Unfinished ends
- Illegible brands
- Lack of rigidity
- Bruised, scaled, or broken coating
- Dents or bends in the metal itself
- Chipped or broken concrete lining
- Improper bands

Joint Coupling:
Field joints shall be made with bands of the same base metal and coating as the metal pipe. Bands shall be of the hugger type designed to fully engage at least one annular corrugation at the end of each metal pipe around its entire circumference. Minimum band width shall equal the centerline length of four annular corrugations. Bands shall conform to current ASTM/AASHTO industry standards as to securing bolts, their number, and placement. Other equally effective methods of connecting the coupling bands may be used if approved by the Manager of the Stormwater Management Division or his designee prior to installation.

Gauge Determination and Tolerances:
The gauge of the culvert metal will be determined from the thickness of the steel sheets prior to the galvanizing or aluminizing. The mean thickness and the permissible variations for each gauge are specified in Section 409.02.01.

Corrugated Aluminum or Steel Pipe and Pipe-Arches:
Pipe sections shall be laid in a prepared trench outside laps of circumferential joints pointing upstream and with longitudinal joints at the sides. Coupling bands, fastened by two or more bolts, shall join the sections. The space between adjoining sections shall be not more than the width of one corrugation.

All damaged spots in galvanized or aluminized coating that expose the base metal shall be repaired according to directions of the manufacturer before the structure is backfilled. All damaged spots in bituminous coating that expose the base metal shall be rerouted with asphalt before the structure is backfilled.

Elongation:
Elongation of metal pipe 60" and larger in diameter shall be as shown on the plans. The contractor shall order the elongation of the vertical axis of the pipe to be done in the shop. Corrugated metal pipe shall be shipped with wire-ties in the pipe ends. Wire-ties shall be removed as soon as possible after the fill is completed.

Before allowing any traffic over a storm drain, the developer shall provide an adequate depth and width of compacted backfill to protect the structure from damage or displacement. Minimum soil cover shall be 12". Any debris or silt that constricts the flow through a pipe shall be removed by the
developer as often as necessary to maintain drainage. All pipe structures shall be cleaned before the work is accepted. Any damage or displacement that may occur due to traffic or erosion shall be repaired or corrected to the satisfaction of Cobb County at the developer's expense.

Minimum Clearances Area:
One foot between the bottom of the base or sub-base, if used, and the exterior crown of the culvert.

A minimum of ½-foot between underground utilities and exterior crown or invert of culverts.

One foot between finished grade and exterior crown of the culvert.

Trench construction for storm drainage pipe shall be in accordance with State Highway Standard 1030D (or most current).

Storm drainage pipe shall be bedded in Type 57 gravel, if firm soil is not available.

505.03 PILINGS

Bridge pilings shall be driven to State highway load standards for loading. Certification of pile load shall be by a registered professional engineer.

505.04 CHANGES

Changes in construction plans caused by field conditions shall be made at the direction of the Development and Inspections Division with the cost of such changes to be paid by the developer.

506 STREETS AND RIGHT-OF-WAY

All street and infrastructure construction performed within right-of-way shall be in accordance with Georgia Department of Transportation Standard Specifications, Construction of Roads and Bridges, latest edition, and any supplemental specifications modifying them.

507 STORMWATER QUALITY BEST MANAGEMENT PRACTICES

Cobb County will utilize the Atlanta Regional Commission's Georgia Stormwater Management Manual, Volumes I and II, as standards for compliance with the federal Clean Water Act (CWA).

508 RULES FOR ISSUING UTILITY PERMITS – GEORGIA D.O.T.

508.01 REQUIREMENTS FOR PERMITS

All utility owners shall be required to apply for and obtain written permission from the Department of Transportation before installing or making substantial changes to any utility facilities on the State or Federal-aid Highway system or on projects which the Department has completed. Permits shall also be required to install facilities adjacent to the right-of-way so as to require trimming on the right-of-way, or the cutting of any paved surface for utility maintenance. A separate permit shall be required for each route (as determined by State Route number, or Federal-aid Route number if not on the State Highway System) and each county where the installation is proposed. Service connections which involve setting a new pole on the right-of-way, trenching in the roadbed, cutting of pavement or boring beneath the pavement will require a permit. A blanket permit may be obtained annually to cover all other service connections in each county.

A. Type of Permits -

1. General Encroachments Permit - The Department has adopted FORM DOT 413, a copy of which is included in the Appendix, as a general permit to be used for all types of utility installations which encroach on public rights-of-way.

2. Blasting Permit - In addition to the general encroachment permit, a supplemental permit will be required when the utility proposes to do any work involving the use of explosives within or under the roadbed. Form DOT 413-X has been adopted for this purpose and a copy of this form is also included in the Appendix.

3. Public Telephone Permit - The installation of public telephones inside buildings in rest areas will not require a separate permit. For telephone installations located along the roadside, Form DOT 413 will be used and will include a Special Provision requiring removal of the telephone and Provision requiring removal of the telephone and appurtenances within ten (10) days after notice from the Department of Transportation that the permit is rescinded. Application for a permit telephone installation within the public right-of-way shall be accompanied by a certification by the Applicant that neither the Applicant nor others will reimburse the adjacent property owner in any manner for this concurrence in the location of a

telephone booth. Applicant shall also certify that no person, persons, or organization, etc., will be granted consideration of any type for the privilege of operating the telephone within the State Highway right-of-way, nor shall any person, person, organizations, ect., outside the Applicant's normal organization be grated a percentage of the revenue, a fixed fee or any compensation of any nature from the operation of the telephone authorized to operate within the State Highway right-of-way.

B. Term and Conditions of Permit - A proposed utility installation must comply with all the applicable requirements and provision of this manual, and any other special instructions or special provisions which the Department may stipulate, before a permit shall be approved. Applicant, in accepting the permit, agrees to abide by the terms and conditions thereof. Failure to company with terms of the permit during the installation, operation and maintenance of utility facilities within the highway right-of-way may result in revocation of the permit and removal of facilities from the right-of-way.

508.02 PERMIT APPLICATION AND APPROVAL PROCEDURE

A. Where to Apply - Application for utility encroachment permits shall be made to the Department's District Engineer having supervisory responsibility for the area in which the facilities are to be installed. A State map showing the Department's district boundaries and a listing of the mailing addresses and telephone numbers of the District Engineer are included in the Appendix.

B. Authority to Approve - The district Engineer will have full authority to approve permits for routine installations which are in accordance with this manual and located on conventional highways. Limited exceptions to the policies or standards stated herein may be approved by the State Utilities Engineer after appropriate review by District personnel. Installation of utilities across controlled access or limited access highway it shall require approval by the Commissioner or this authorized representative. Permit applications for attachments to bridges must have the approval of the State Bridge and Structural Design Engineer before approval by the District Engineer or State Utilities Engineer. When attachments are to be made to bridges over a railroad, the Applicant must obtain written concurrence of the Railroad before an approval permit will be released by the Department.

Permit applications for blasting will be reviewed by the State Materials and Research Engineer in addition to the District Engineer and may be approved by the State Utilities Engineer.

On active projects, permits will not be approved until adequate provisions are made for incorporation of the facilities into project plans and contract.

Any request for encroachment on Interstate highways involving an exception to the State's policy and standards as described herein shall require the approval of the Federal Highway Administration in addition to the State's approval. Approval of the FHWA will be requested by the Department when required.

C. Approval of Other Agencies - Applications for encroachments on State-owned property under control of the Department of Transportation should be made to the Department's District Office on Form DOT 413 in the same manner as for encroachments on State Highways. After review in the District, the application will be forwarded to the State Utilities Engineer for coordination with the other State Departments or agencies involved.

508.03 ALLOCATION OF COSTS

A. Permit Fee - There shall be no charge for the issuance of the permit except as required under Chapter 672-11 of the Department's rules.

B. Installation Costs - The entire cost of installing, maintaining, repairing, operating, or using the pole line, buried cable, pipeline, or miscellaneous utility facility, [performing miscellaneous operations and any other expense whatsoever incidental to the facilities or operations authorized by the permit, shall be paid by the Applicant.

C. Reimbursement of Department Expense - The Applicant shall, in addition to paragraph B, above, reimburse the Department for any reasonable and necessary expense including, but not limited to, extraordinary inspection services by Department personnel, that the Department may incur in connection with the facilities or operations authorized by the permit. The reimbursement to the Department shall be made by the applicant within thirty (3) days after receiving a statement from the Engineer.

D. Materials Within the Right-of-Way - The Applicant, upon notification in writing by the Engineer, shall pay a reasonable market price for any materials removed from the right-of-way or destroyed as a result of operations authorized by the permit.

508.04 LIABILITY AND CONTROL

A. Damages Resulting from Installation – The applicant shall indemnify and hold harmless the State, the Department of Transportation, the members thereof, and all officers, employees or agents of the state or the Department of Transportation, or any political subdivision thereof, against any and all damages, claims, demands, actions, causes of action, costs and expenses of whatsoever nature, which may result from any injury to, or the death of, any

persons or from the loss of, or damages to property of any kind or nature, including the highway and highway facilities or structures, property or equipment used or owned by the State or the Department of Transportation , and facilities which now or may hereafter occupy the right-of-way of the said highway, when such injury, death, loss or damages arises out of the construction, installation, maintenance, repair, removal, relocation, operation or use of the pole line, buried cable, pipeline, or miscellaneous utility facility covered by the permit, or out of the miscellaneous operations authorized by the permit.

B. **Injury or Damage to Utilities** - The Department, its Engineer, officers or employees shall not be held responsible or liable for injury or damage that may occur to facilities covered by the permit, or to any connection or connections thereto, by reason of highway maintenance and construction activities or highway contractor or permittee operations. The Department's contractor shall not be held liable for any damage that may occur to utility facilities after the utility owner has been notified of a conflict with construction and given reasonable time to relocate the facilities

.

C. **Pavement Repair Liability** - Following the patching or tunneling underneath of any paved surface, the applicant shall be responsible for the condition of said pavement, shoulders and patches, and shall upon request from the Engineer, repair to the. said pavement, shoulders and patches, and shall upon request from the Engineer, repair to the Engineer's satisfaction any of the said pavement shoulders or patches which become settled, cracked, broken or otherwise faulty.

D. **Protection of Public** - The applicant shall employ any and all methods in performing the operations authorized by the permit which the Engineer may require in order to properly protect the public from injury and the highway from damage. The utility owner shall have sole responsibility for the adequacy and safety of the design and engineering of its facilities.

E. **Inspection of Work** - The Department reserves the right to inspect the work during such periods as the Engineer deems necessary to check compliance with the terms of the permit by the Applicant, and to require the Applicant to correct all deviations from the approved permit. If the Department is required to incur additional or unusual expense to insure compliance with the terms of the permit due to inadequate control procedures by Applicant, Applicant shall reimburse the Department for such additional cost of inspection and any repairs the Department must make to the highway. Any supervision or control exercised by the Engineer shall in no way relieve the Applicant or any duty or supervision control relieve the Applicant from any liability for loss, damage or injury to persons or property as provided in paragraph A., above.

F. **Work by Utility Contractors** - When the Applicant shall contract for any work to be performed on the public right-of-way under authority of the permit, the contractor shall agree in writing prior to beginning work, that such work will be performed in accordance with the Department's current Utility Accommodation Standards and Specifications and be subject to inspection by the Department to insure compliance therewith. The written agreement shall further provide that the Department shall be held harmless for any extra expense or damages to the contractor as a result of any action the Department may require to correct all deviations from the said Standards and Specifications. This agreement may be made a part of continuing contracts or bid contract documents. If not included in the contract, it shall be completed prior to work beginning. A suitable form for the required Special Assurances is included in the Appendix. When any contractor develops a history of poor performance, the Department reserves the right to require the contractor to furnish a surety bond in an amount specified by the District Engineer in accordance with paragraph 3.5, B., below. Upon continued refusal of a contractor to comply with Department rules, regulations and standards, the Department may ban said contractor from working within the public right-of way.

G. **Final Permit Authority** - The decision of the Engineer shall be final and conclusive with respect to any of the conditions, terms, stipulations and provisions of the permit. This shall not foreclose applicant's right of appeal.

508.05 INSURANCE AND BOND

A. **Requirements for Insurance** - When requested in writing by the Engineer, the Applicant or his contractor shall obtain and carry, for the period of time required for the complete installation of the facilities authorized by the permit, including the repair and restoration of the highway facilities, and also during such future periods of time when operations are performed involving the repair, relocation or removal of said facilities authorized by the permit, a liability and property damage insurance policy, or policies, holding the Department harmless from any damages arising out of the operations performed or authorized by the permit. The said insurance shall provide, as a minimum, coverage in the following amounts: $200,000.00 property damage resulting from any single occurrence, and $1,000,000.00 for the death or injury of any person, subject to a limit of $2,000,000.00 for injuries or deaths resulting from any single occurrence. The said insurance policy, or policies, shall be with an insurance company authorized and licensed to do business in the State of Georgia. A copy of the policy, or policies, or certification evidencing same, shall be submitted to the Department's District Engineer having jurisdiction over the area in which the proposed work I located, and must be approved by him, before any work is commenced under the permit.

B. **Requirement for Bond** - When requested in writing by the Engineer, the Applicant or his contractor shall furnish, for the period of time required for the complete installation of the facilities authorized by the permit, including the repair and restoration of the highway facilities, and also during such future periods of time when operations are performed involving the repair, relocation or removal of said facilities authorized by the permit, a surety bond in the amount specified in the Special Provisions of the permit. The bond shall be written by a Surety Company duly qualified and licensed to do business in the State of Georgia. Form DOT 513, as contained in the Appendix, or other form satisfactory to the Engineer, may be used. No work shall be commenced under the permit until the said bond has been submitted to and approved by the Department.

C. **Traffic Control** - A written traffic control plan will be submitted with each permit application for work requested within the rights-of-way. Companies who have a written traffic control plan approved by the Department may meet this requirement by reference to the appropriate parts of the plan in their permit application. During the initial installation or construction of the facilities authorized by the permit, or during any future repair, removal or relocation thereof, or during any miscellaneous operations, the Applicant shall, at all times, maintain flaggers, signs, lights, flares, barricades, and other safety devices as approved by the permit or as the Engineer may reasonably deem necessary to properly protect traffic upon the highway, and to warn and safeguard the public against injury or damage. As a minimum, the Applicant must comply with the Manual on Uniform Traffic Control Devices. The Applicant shall provide a watchman, as required, to maintain said signs, lights, flares, barricades and other safety devices during non-work hours, and shall, upon request furnish the Engineer the telephone number and/or address of such watchman.

D. **Restrictions Against Interference with Traffic** - The Applicant shall so conduct this operations that there will be a minimum of interference with or interruption of traffic upon and along the highway. This applies to both the initial installation and the continuing maintenance and operation of facilities. Except in emergencies, there shall be no interference with or interruption of traffic upon and along the highway until a plan for the satisfactory handling of traffic has been worked out and approved by the local Department Engineer or other person named in the Permit. In emergencies the Applicant shall notify the local Department Engineer or inspector as soon as practical. The Department reserves the right to prohibit any work, which may interfere with traffic movement during times of peak traffic flow.

E. **Restrictions on Access** - It is expressly provided that, with respect to any limited access highway, the applicant, except as hereinafter provided, shall

not have or gain direct access, either ingress or egress, from the main traveled way of said highway or its on or off ramps to any of the facilities authorized by the permit, and that access to said facilities from the main traveled way, or on or off ramps of said highway, is absolutely prohibited, either by vehicle or by foot. However, upon notice to the local Area Engineer or his representative that the construction of the authorized facilities pursuant to the permit is to be undertaken, or that an emergency exists and repairs are needed for the immediate protection of property and persons or prevention of injury, the Department may approve direct access for ingress and egress to said authorized facilities from said on and off ramps or main traveled ways, except that no vehicular traffic movement shall be allowed which would cross traffic or be contrary to normal traffic movement. Such permission will only be granted during the actual time of the construction of the authorized facilities or of the emergency, and applicant agrees to take every precaution during such periods to safeguard the highway users. It is understood by the applicant that any violation of the above regulations governing access to limited access highways shall result in a cancellation of the access privileges herein contained.

508.06 MAINTENANCE

A. General Restrictions - Applicant shall at all times keep facilities authorized by the permit in a good state of repair from the standpoint of both structure and appearance. The Department may revoke the permit and order removal of any facilities, which become a hazard to the public or the roadway due to improper maintenance

B. Notice to Department - The utility shall give 24-hours advance notice to the Department's District Engineer, or his local representative, before undertaking any of the following maintenance activities within the State Highway right-of-way:

Any work which requires the blocking of one or more traffic lanes for a period of time in excess of 2 hours.

1. Installation of any temporary structures which are to remain on the right-of way.
2. The cutting, trimming or spraying of any trees or shrubs within the right-of way.
3. Making any pavement cut except in an emergency.
4. Making any excavation within the roadbed, which may remain open overnight.

508.07 APPROVAL AND NOTICE OF OTHER AGENCIES

A. Additional Permit or License - Nothing in the permit shall be construed to grant rights or imply approval in areas not falling within the authority and jurisdiction of the Department. It shall be the responsibility of the Applicant to determine the need for, and to obtain, such license, permit, or other form of approval, which may be required by the State or local agencies, Federal agencies, or Railroads.

B. Utilities on Active Construction Projects - When highway construction is underway, it shall be the responsibility of the applicant to furnish a schedule for making the new utility installation that is compatible with project construction. Written approval of such schedule by the highway contractor shall be furnished to the Department's engineer having jurisdiction over the project prior to beginning work. Upon request the Department will assist in resolving any disputes over work schedules or in arranging for emergency access to utility facilities within an active project.

C. Notice to Other Utilities - The applicant shall give due notice to owners of any other know overhead, underground or other utility facilities at the described location which may be impacted by installation of applicant's facility, notifying them of the work proposed under the permit and the date of their proposed work.

508.08 EFFECTIVE PERIOD OF TIME

A. Term of Permit - If work begins within twelve (12) months after issuance, and unless otherwise provided in the Special Provision, the permit shall be in effect for an indefinite period of time from and after the date issued, unless sooner revoked by mutual consent or by the Department for failure of the applicant to abide by the terms and conditions of the permit or by operation of law. A permit is automatically revoked when the utility for which the permit is issued ceases or abandons the operations.

B. Cancellation for Cause - Failure of the applicant, within a reasonable time after written notice form the Engineer, to comply with any of the terms and conditions of the permit shall be sufficient cause for cancellation of the permit. facilities within an active project.

C. Assignment or Transfer- The permit, and the privileges grated, and the obligations of permittee created thereby, shall be binding upon the successors and assigns of the permittee. Permittee shall give the Engineer written notice of any such notice o any such assignment or transfer within a reasonable time thereafter.

D. **Time Limited on Beginning Work** - If the applicant fails to commence installation of the pole line, buried cable, pipe line, miscellaneous facility, or other miscellaneous operations covered by the permit within twelve (12) months from the date the permit is issued, said permit shall be deemed null and void and all privileges thereunder forfeited, unless a written extension of time is obtained from the Department.

E. **Restriction Against Varied Use** Subject to safety regulations in effect in the State, the following precautionary measures are applicable to pipeline crossings.

1. Required Permit Information - Pipeline crossing permits shall specify the transmittant (or class of transmittants), the maximum working or test pressures (or potential) and the design standards for the carrier.
2. Changes Subsequent to Permit Approval
   a. For encased carriers, the utility company will be required to give advance notice of change of transmittant or increase in working or potential pressure.
   b. For uncased carriers, the utility will be required to renegotiate the occupancy before changing transmittant or increasing working or potential pressure.

508.09 INSTALLATION IDENTIFICATION

In order to identify the work during installation, the permittee shall place a card sign, or signs, on the highway near the work before beginning the installation. The sign shall be visible from the traveled way and shall be placed not less than six (6) feet above the ground and at least one per mile. The sign or signs will be furnished to the Applicant by the Department along with the approved permit.

508.10 COORDINATION OF REQUIREMENTS

In the case of any discrepancy between the requirements of this Manual and the plans or Special Provisions attached to the permit, the following order of control shall govern:

1. Plans attached to the permit shall govern over this Manual, and
2. Special Provisions shall govern over this Manual and plans attached to the permit.

LIST OF STANDARD DETAILS

600 LIST OF STANDARD DETAILS

Detail A4	Special Detail; Detectable Warning Surface Truncated Dome Size, Spacing and Alignment Requirements
Detail 80	Utility Standard
Detail 80A	Utility Standard; Local Urban Street
Detail 80B	Utility Standard; Private Urban Alley
Detail 81-A	Utility Locations Plan View; Local Urban Streets
Detail 100A	Typical Section Residential Street
Detail 100B	Residential Street Grading
Detail 102	Rural Residential Street
Detail 103	Intersection Landing Requirements
Detail 104A	Typical Residential Cul-De-Sac
Detail 104B	Typical Offset Cul-De-Sac
Detail104C	Bubble Cul-De-Sac
Detail 106	Concrete Curbs, Medians
Detail 107	Street Sign Base
Detail 108	Stopping Sight Distance Requirements
Detail 109	Obstructing Visibility at Intersections
Detail 110	Street Barricade
Detail 113	Sidewalks
Detail 114	Off Street Parking
Detail 116	Commercial Driveway Requirements
Detail 116R	Residential Driveway Standard
Detail 120	Pathways
Detail 150	Traditional Neighborhood Development (TND) Typical Section
Detail 401A	Acceleration & Deceleration Lanes
Detail 401B	Intersection Sight Distance
Detail 401.C	3-Lane Urban Typical Section
Detail 401.D	4-Lane Divided 20’ Median
Detail 401E	5-Lane Urban
Detail 401F	Left Turn Lane
Detail 401P	Pavement Markings
Detail 401R	Raised Pavement Markers
Detail 416-1	Tree Planting
Detail 416-2	Tree Anchoring – Type A
Detail 416-3	Tree Anchoring – Type B
Detail 416-4	Tree Anchoring – Type C
Detail 416-5	Tree Anchoring – Type D
Detail 416-6	Tree Planting in Parking Lots
Detail 416-7	Tree Protection Fence

Detail V-1860	Standard Detail for Manhole Cover SWM
Detail 02235-1	Steel Casing
Detail 02270-1	Sediment Barrier (Silt Fence)
Detail 02270-2	Sediment Barrier (Staked Hay Bale)
Detail 02270-3	Inlet Sediment Trap
Detail 02270-4A	Curb Inlet Filter Trap (Catch Basin – In Line)
Detail 02270-4B	Curb Inlet Filter Trap (Catch Basin – In Sag)
Detail 02270-5	Check Dam
Detail 02270-6 (A)	Channel Stabilization (Gabion)
Detail 02270-6 (B)	Channel Stabilization (Rip-Rap)
Detail 02270-10(A)	Temporary Stream Crossing
Detail 02270-10(B)	Temporary Stream Crossing
Detail 02270-11	Diversion (Piped)
Detail 02270-12	Diversion (Pumped)
Detail 02270-13(A)	Engineered Diversion Structure (Sequence One)
Detail 02270-13(B)	Engineered Diversion Structure (Sequence Two)
Detail 02270-13(C)	Engineered Diversion Structure (Section AA)
Detail 02270-15	Rock Filter Dam
Detail 02270-16	Construction Exit
Detail 02270-20(A)	Disturbed Area Stabilization (With Mulching)
Detail 02270-20(B)	Disturbed Area Stabilization (With Temporary Seeding)
Detail 02270-20(C)	Disturbed Area Stabilization (With Permanent Vegetation)
Detail 02270-20(D)	Disturbed Area Stabilization (With Sodding)
Detail 02270-21	Disturbed Area Stabilization Application Table
Detail 02270-22	Matting and Blankets
Detail 02510-1	Driveway Replacement
Detail 02510-2	Concrete Trench Cap and Asphalt Pavement Trench Patch
Detail 02510-3	Concrete Trench Cap and Asphalt Overlay
Detail 02510-5	Graded Aggregate Base/Asphalt Binder/Asphalt Surface Pavement Replacement
Detail 2510-06	Type “B” Asphalt Binder Trench Cap (For Locations Subject to Subsequent Milling/Profiling and Resurfacing)
Detail 02713-1	Water Main Trench Detail
Detail 02713-2	Fire Hydrant Installation (Subdivision Standard)
Detail 02713-3	Fire Hydrant Installation (Roadway Standard)
Detail 02713-4	Valve Installation
Detail 02713-5	Concrete Valve Marker
Detail 02713-6	Line Abandonment at Valve
Detail 02713-7	Valve Abandonment
Detail 02713-8	Water Line Valving at Intersection
Detail 02713-9(B)	Dead-End Fire Hydrant Installation (New Installations)
Detail 02713-11(A)	Residential Cul-De-Sac Copper Waterline Sizing with Fire Hydrant

Detail 02713-11(B)	Residential Cul-De-Sac Copper Waterline Sizing without Fire Hydrant
Detail 02713-11(C)	Curb Stop Valving for 1” Copper Water Main
Detail 02713-11(D)	Curb Stop Valving for 1½” Copper Water Main
Detail 02713-12(A)	Thrust Blocking
Detail 02713-12(B)	Thrust Block Dimensions
Detail 02713-12(C)	Thrust Restraint: Concrete Collar with Rodding System
Detail 02713-13	Water Meter Location for Subdivision (Typical Plan)
Detail 02713-14A	¾” Water Meter Installation (Typical Section)
Detail 02713-14B	1” Water Meter Installation (Typical Section)
Detail 02713-14C	¾” and 1” Water Meter Box & Lid Detail
Detail 02713-23	¾” thru 10” Meter Installation Information
Detail 02713-30	Water Main in Street Installation
Detail 02713-31	Water Main in Street Installation
Detail 02713-32	Valve Raising Out of Pavement
Detail 02713-33	Valve Raising in Street After Repaving
Detail 02713-42	New Domestic/Irrigation Combination Meter with Back Flow Prevention Device Installation Developer Installed
Detail 02713-50	Illustration of Typical Residential Water Supply
Detail 02722-1	Sewer Trench Detail
Detail 02722-2	Sewer Service Connection
Detail 02722-3	Dry Sewer
Detail 02722-4A	Utility Tracer
Detail 02722-4B	Sewer Service Utility Tracer
Detail 02722-4C	Force Main Marker
Detail 02722-10	Sanitary Sewer Service Cleanout Assembly Installation on an Existing 6” Service Line
Detail 02722-11	Sanitary Sewer Service Cleanout Assembly Installation on an Existing 4” Service Line
Detail 2722-30	Sewage Backwater Valve
Detail 03410-1	Standard Manhole (<20 Depth)
Detail 03410-2	Standard Manhole Frame and Cover Installation
Detail 03410-3	Shallow Manhole (<4’ - 6” Depth) (Section View)
Detail 03410-4	Doghouse Manhole
Detail 03410-5	Deep Manhole (>20 Feet Manhole)
Detail 03410-6	Vented Manhole
Detail 03410-7	Outside Drop Connection
Detail 03410-8	Inside Drop Manhole Connection
Detail 03410-9	Manhole Raising In Pavement
Detail 03410-10	Manhole Raising Out of Pavement
Detail 03410-11	Standard Manhole Frame and Cover
Detail 03410-12	Watertight Manhole Frame and Cover
Detail 3410-13	Standard Storm Drain Cover – Chattahoochee River
Detail 3410-14	Standard Storm Drain Cover – Etowah River
Detail 03410-20(A)	Grease Trap

Detail 03410-20(B)	Non-Food Preparation Dumpster Trap
Detail 03410-30	Manhole Frame and Cover Replacement on Existing Manhole Out of Pavement
Detail 03410-31	Manhole Raising For Existing Manhole on Easement
Detail 03410-32	Raising Brick Manhole With Precast Section

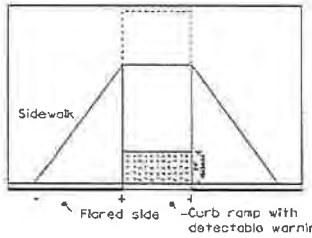

SIZE: DETECTABLE WARNINGS SHALL BE 24 INCHES (610 mm) IN THE DIRECTION OF PEDESTRAIN TRAVEL AND EXTEND THE FULL WIDTH OF THE CURB RAMP OR FLUSH SURFACE.

LOCATION: THE DETECTABLE WARNING SHALL BE LOCATED SO THAT THE EDGE NEAREST THE CURB LINE OR OTHER POTENTIAL HAZARD IS 6 TO 8 INCHES (150 mm to 180mm) FROM THE CURB LINE OR OTHER POTENTIAL HAZARD, SUSH AS A REFLECTIVE POOL EDGE OR THE DYNAMIC ENVELOPE OF RAIL OPERATIONS.

DOME SIZE AND SPACING: TRUNCATED DOMES SHALL HAVE A BASE DIAMETER OF 0.9 INCH TO 1.4 INCH (23mm-36mm) AT THE BOTTOM, A DIAMETER OF 0.45 INCH TO 0.91INCH (11mm-23mm) AT THE TOP, THE TOP DIAMETER SHALL BE A MINIMUM OF 50% AND A MAXIMUM OF 65% OF THE BASE DIAMENTER, A HEIGHT OF 0.2 INCH (5.1mm) AND A CENTER-TO-CENTER SPACING OF 2.40 INCHES (61mm) DESIRABLE 1.60 INCHES (41mm) MINIMUM MEASURED ALONG ONE SIDE OF A SQUARE ARRANGEMENT. DOMES SHALL HAVE A SQUARE ARRANGEMENT. DOMES SHALL BE ALIGNED ON A SQUARE GRID IN THE PREDOMINANT DIRECTION OF TRAVEL TO PERMIT WHEELS TO ROLL BETWEEN DOMES.

VISUAL CONTRAST: DETECTABLE WARNING SURFACES SHALL CONTRAST VISUALLY WITH THE ADJACENT WALKING SURFACE EITHER LIGHT-ON-DARK OR DARK-ON-LIGHT. THE MATERIAL USED TO PROVIDE VISUAL CONTRACT SHALL BE AN INTEGRAL PART OF THE DETECTABLE WARNING SURFACE.

MATERIALS:

NEW CONSTRUCTION

THE DETECTABLE WARNINGS SHALL BE MADE OF MATERIALS SPECIFIED ON OPL 87.

RETROFIT OF EXISTING RAMPS

SURFACED APPLIED MATERIALS WILL ONLY BE APPROVED TO BE USED ON EXISTING WHEELCHAIR RAMPS.

INSTALLATION:

BRICK PAVERS SHALL BE SET IN A WET MORTAR BED. THE BED SHALL BE PLACED ON CONCRETE. THE CONCRETE SHALL BE A MINIMUM OF 4" THICK.

CERAMIC TILE SHALL BE EPOXIED IN PLACE OR SET IN A WET MORTAR BED. MANUFACTURER RECOMMEND ADHESIVE OR FASTENER SHALL BE USED IN THE INSTALLATION.

ALL OTHER MATERIALS SHALL BE INSTALLED ACCORDING TO MANUFACTURES DETAILS OR INSTRUCTION.

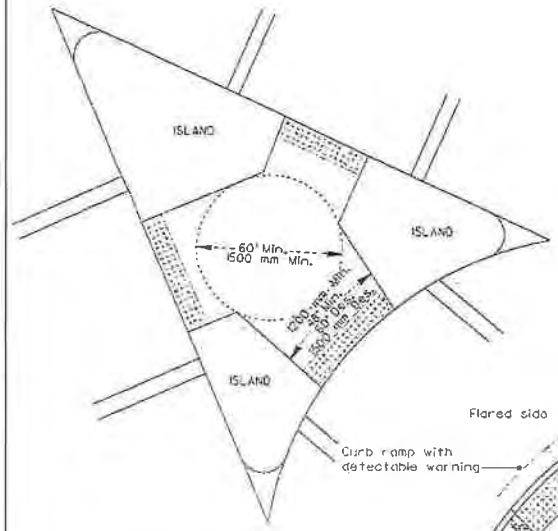

DETAIL FOR DETECTABLE WARNING AT CUT-THRU ISLAND

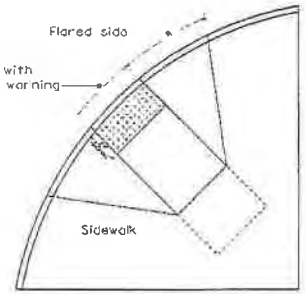

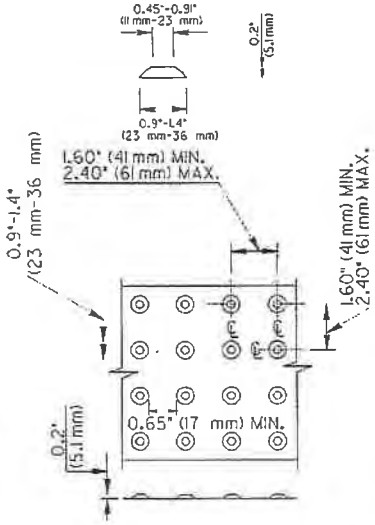

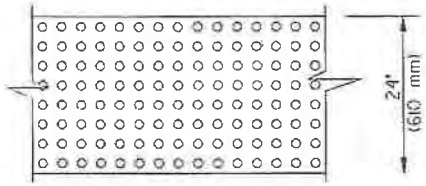

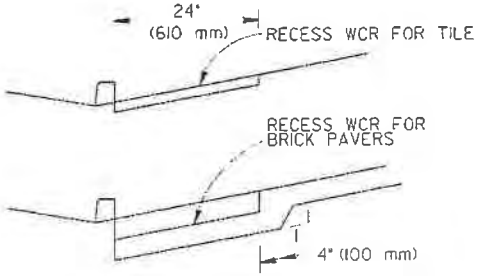

FOR TILE OR BRICK PAVERS NO VERTICAL LIP OVER 1/8" (3 mm) IS ALLOWED.

NO SEPARATE PAYMENT WILL BE MADE FOR THE DETECTABLE WARNINGS. THE COST SHALL BE INCLUDED IN THE PRICE BID FOR SIDEWALK (OR CURB CUT RAMP IF THE ITEM IS INCLUDED IN THE PROPOSAL).

FOR CUT-THRU ISLANDS AND EXISTING RAMPS, WHERE NO SIDEWALK OR CURB CUT RAMPS ARE IN THE PROPOSAL. THE COST OF THE DETECTABLE WARINGS SHALL BE INCLUDED IN THE OVERALL BID PRICE SUBMITTED.

DEPARTMENT OF TRANSPORTATION STATE OF GEORGIA		
SPECIAL DETAIL DETECTABLE WARNING SURFACE TRUNCATED DOME SIZE, SPACING AND ALIGNMENT REQUIREMENTS NO SCALE		A4

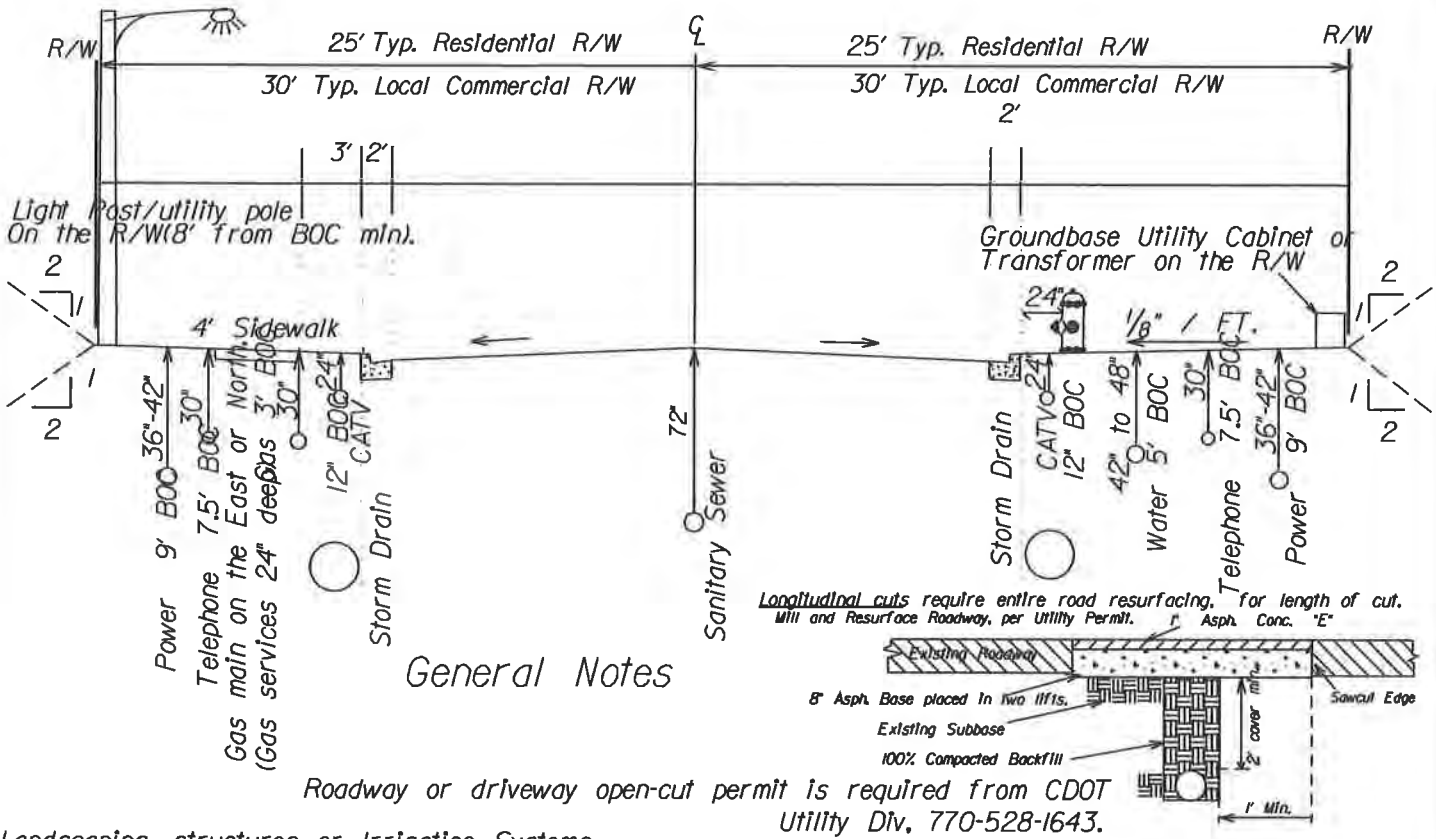

Roadway or driveway open-cut permit is required from CDOT Utility Div. 770-528-1643.

Landscaping, structures or Irrigation Systems are NOT allowed in the R/W.

Trench Repair Detail for road crossing

1. Storm Drain location and size shown as guide only. Design to dictate actual size and location Utility adjustments to be approved by site inspector.
2. Sidewalks are to be placed on the North or East side of street.
3. Waterline to be placed on the West or South side of street.

SIGNAL NOTES:- All signal plans must be submitted to and approved by the Traffic Signal Engineer, prior to LDP approval.
- Any traffic signal work shall be performed in accordance with current Cobb County CDOT Signal Specifications by an approved Traffic Signal Contractor. Any traffic signal equipment damaged as a result of this project shall be replaced/upgraded by the contractor/developer immediately. Damaged loops shall be replaced/upgraded with Video Detection.
- Developer/Contractor is required to maintain vehicle detection without interruption for all traffic signal phases affected during construction of the project. Approved video detection shall be used for presence detection and approved video or microwave detection shall be used for pulse detection. Additional poles/equipment may be required to support these detection devices.- Contact the Traffic Signal Engineer at (770) 528-3664 for any traffic signal related issues. Contact the Signal Maintenance Supervisor at (770) 528-1689 to locate any signal equipment if proposed development is within 450' or less of a signalized intersection.

5. Street lighting to be designed by power company and approved by CDOT Street Light Administrator.
6. Construction equipment shall not be parked in areas which restrict sight distance to any drives or streets.
7. Street lane or total road closure permit: The contractor is required to obtain one of these permits prior to beginning any work. Contact CDOT Operations at 770-528-1675.
8. Contractor shall maintain driveway access and postal service at all times.
9. Any infrastructure (pavement, signals, drainage structures, curb, sidewalk, etc. damaged or displaced as part of this project shall be replaced by the contractor. Curb and Sidewalk shall be replaced, full section joint to joint.
10. Measurements shown above are from the Back of Curb (BOC) to center of structure.
11. All Bores, Sidewalk and Roadway cuts for water and sewer installation within Cobb County R/W shall require a CDOT Utility Permit. Contact CCWS at 419-6345 to begin the permit process.

Allow up to two weeks after permit application for CDOT approval. ADD NOTE TO UTILITY SHEET.

12. No drop-offs adjacent to the roadway after work hours.
13. Cross/slope for 13' Shoulder/Sidewalk, Ramps and Driveway grade not to exceed ¼" per Linear foot and meet ADA Requiements.
14. Traffic control devices (signs, signals, markings) and certified flagman are required and shall meet MUTCD Standards latest edition.
15. All poles are to be 8' from back of curb, minimum.

For all commercial and residential work in the R/W.

DETAIL 80 UTILITY STANDARD

LOCAL URBAN STREET
40' R/W

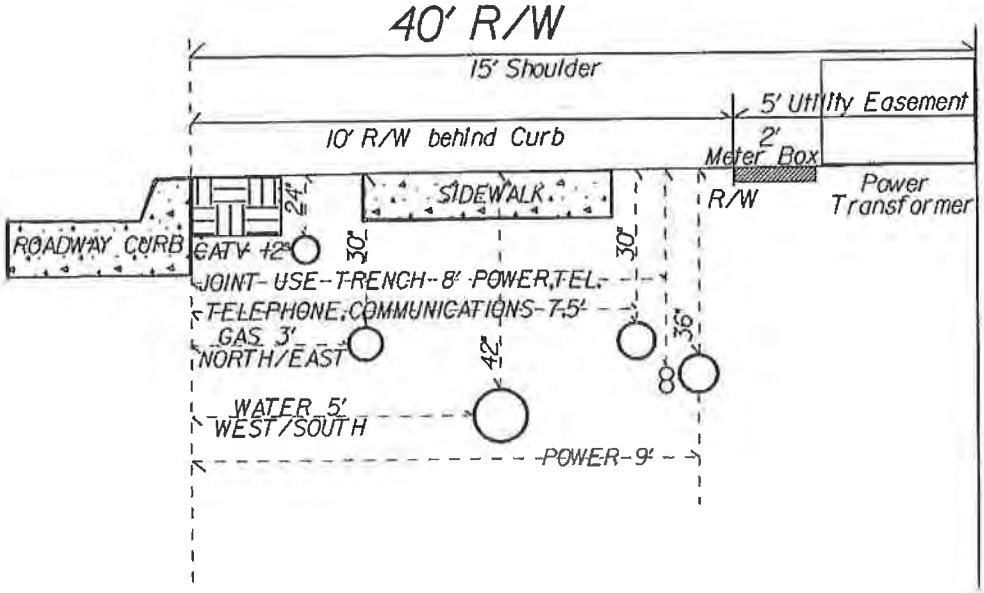

UTILITY STANDARD 80A

NOTE: Reduced R/W or Private concept requires approval via the Zoning process.
Street Lights are to be on the back of the utility easement.
Utilities are to deflect around drainage structures, as required or per site inspector.

PRIVATE URBAN ALLEY
30' ACCESS & 10' UTILITY EASEMENT

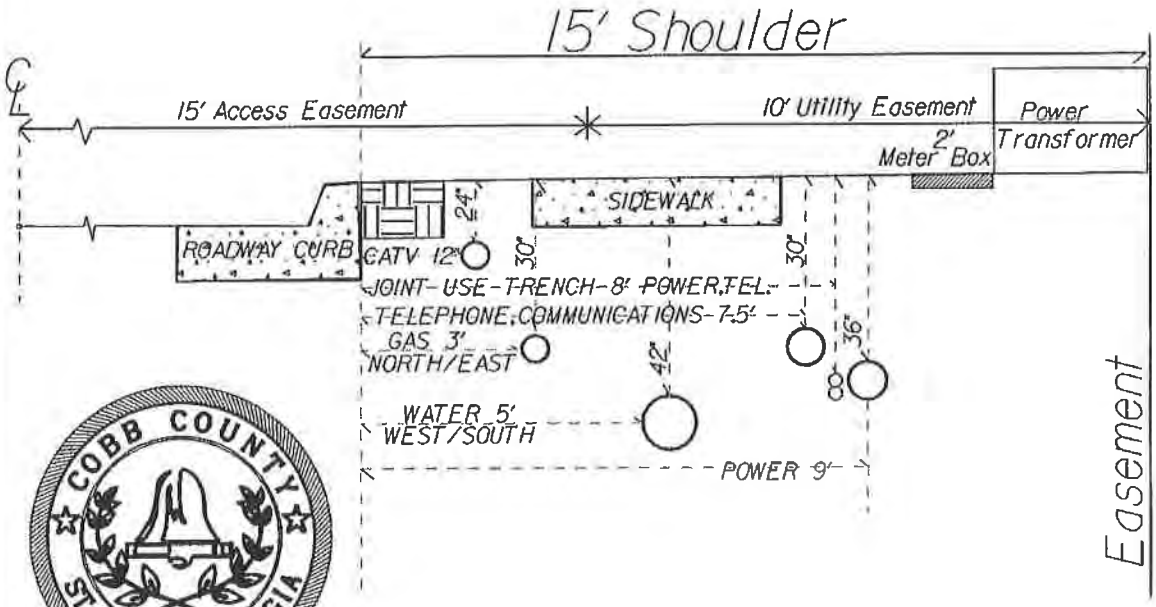

UTILITY STANDARD 80B

LOCAL URBAN STREETS

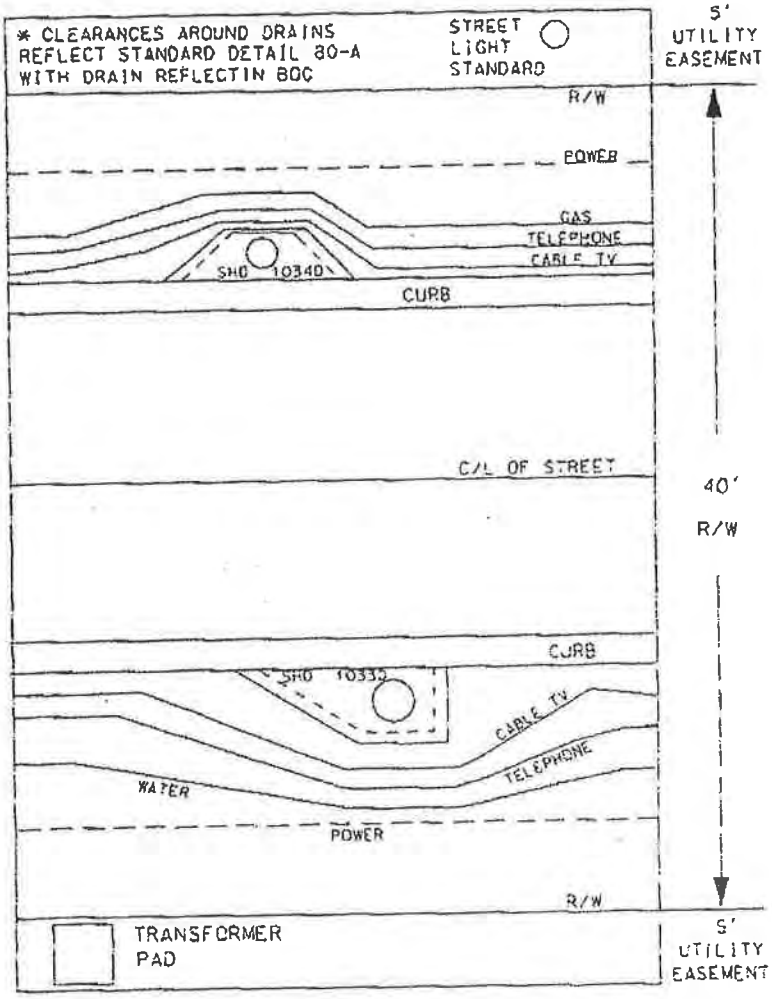

UTILITY LOCATIONS

PLAN VIEW

DETAIL 81-A

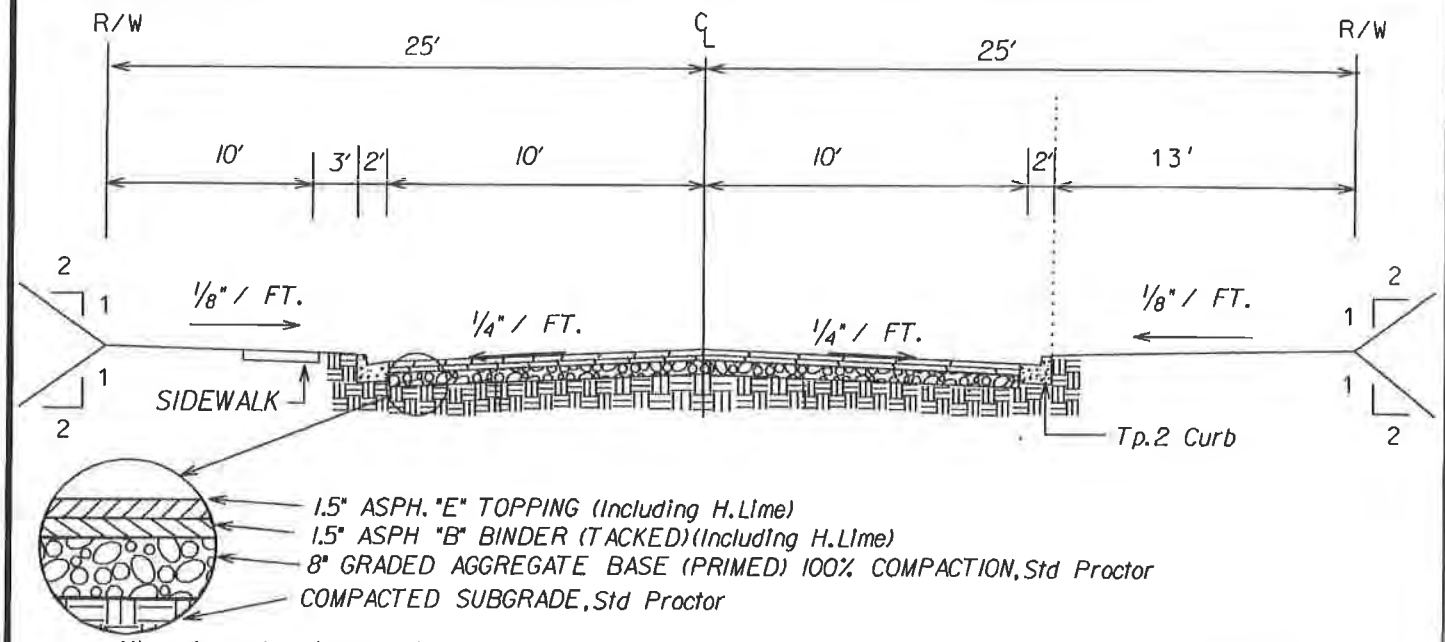

All road construction, materials and methods are subject to testing and tolerances in accordance with GDOT Standard Specifications, latest Edition.

TYPICAL SECTION RESIDENTIAL STREET DETAIL 100A

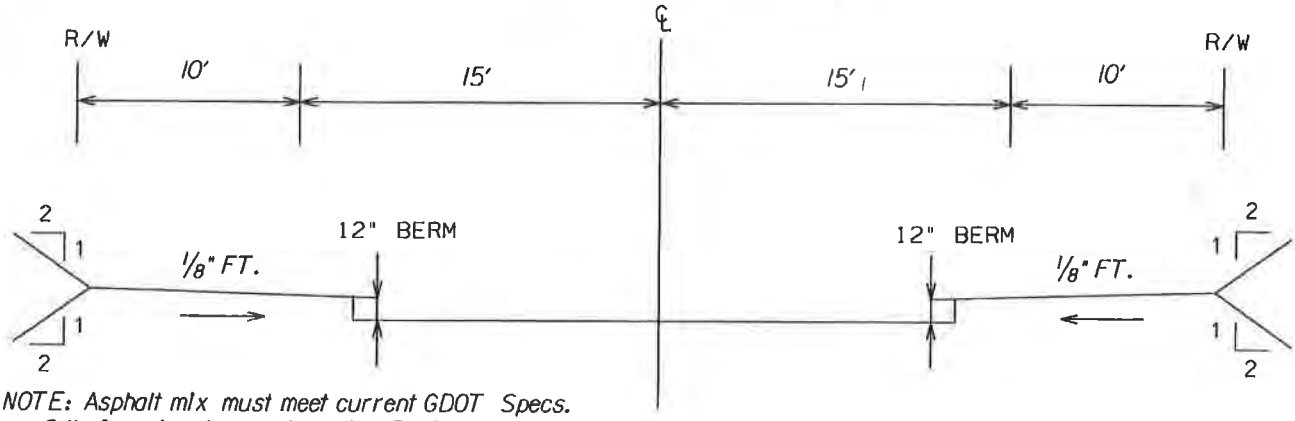

NOTE: Asphalt mix must meet current GDOT Specs.
24' of paving is required for Residential Collector.
All street frontage is to be curbed.
Road Subgrade fill compaction to be 95% up to top 12", 100% for top 12" (Std. Proctor).
Residential R/W signage to be approved by CDOT Operations, prior to any building permits.
Contact CDOT Operations Signing and Marking Section, 770-528-1761, 1672, 1673 or 1674 to coordinate.
Aesthetic Signs, at developers expense, may be approved thru CDOT by PERMIT ONLY.
NO permanent traffic control, signs or striping to be placed without CDOT Operations Approval.
Private street signage and striping to meet Cobb DOT and MUTCD standards.

RESIDENTIAL STREET GRADING DETAIL 100B

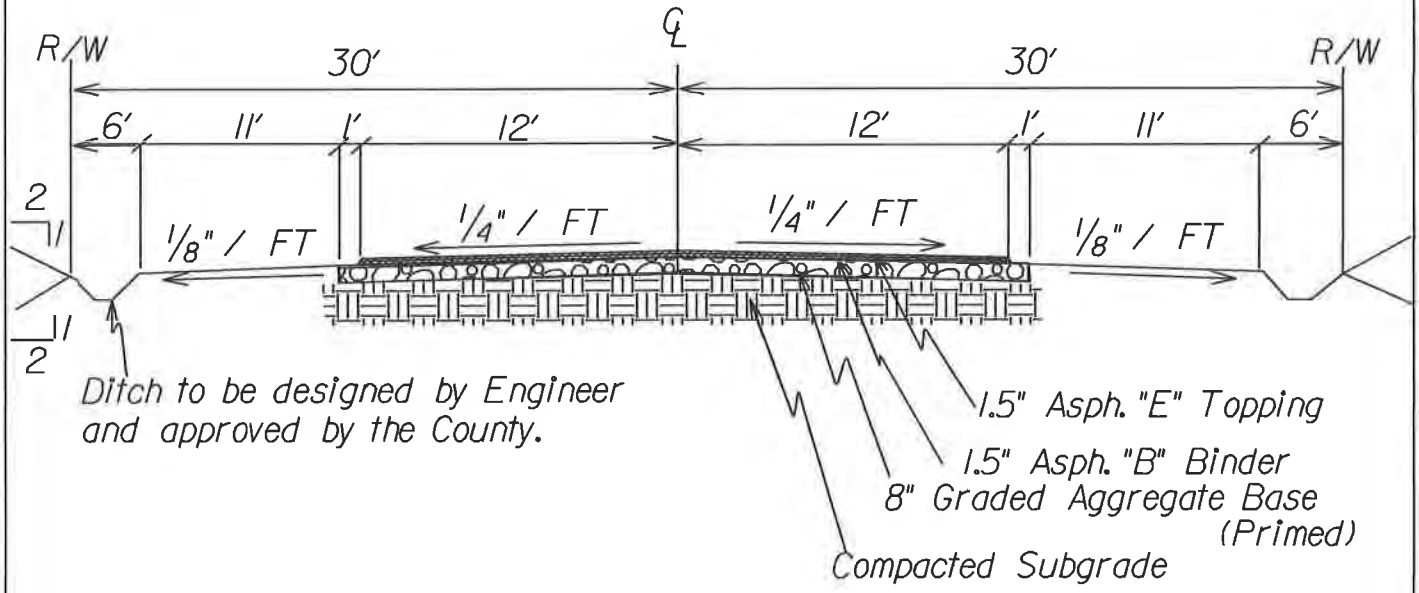

NOTE: For use with R80 or greater Residential zoning & subject to CDOT approval.
Road fill compaction to be 95% up to top 12" and 100% for top 12" (Std Proctor).

UNDERGROUND UTILITY LOCATION FOR RURAL RESIDENTIAL STREETS

UTILITY	DISTANCE FROM CENTERLINE	DEPTH
Electrical power	20 Feet	3 Feet
Water	17 Feet	4 Feet
Telephone	13.5 Feet	2 Feet
Gas	15 Feet	2.5 Feet
TV	18.5 Feet	2" Feet

COBB COUNTY STATE OF GEORGIA 1832

RURAL RESIDENTIAL STREET DETAIL 102

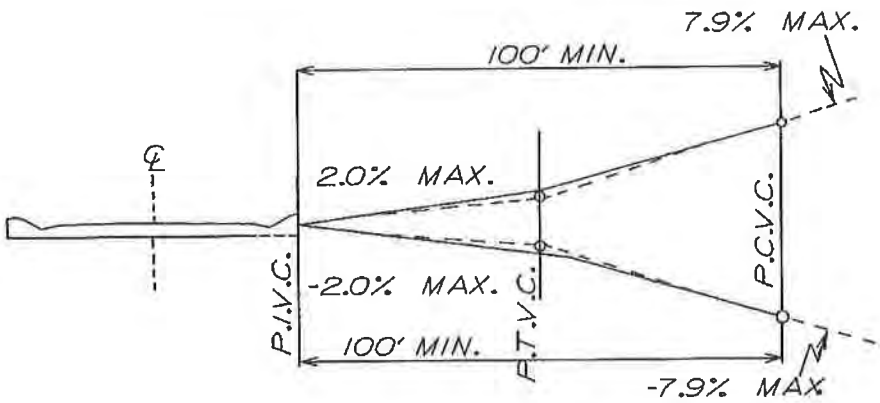

LANDING REQUIREMENTS
FOR GRADES 7.9% OR LESS

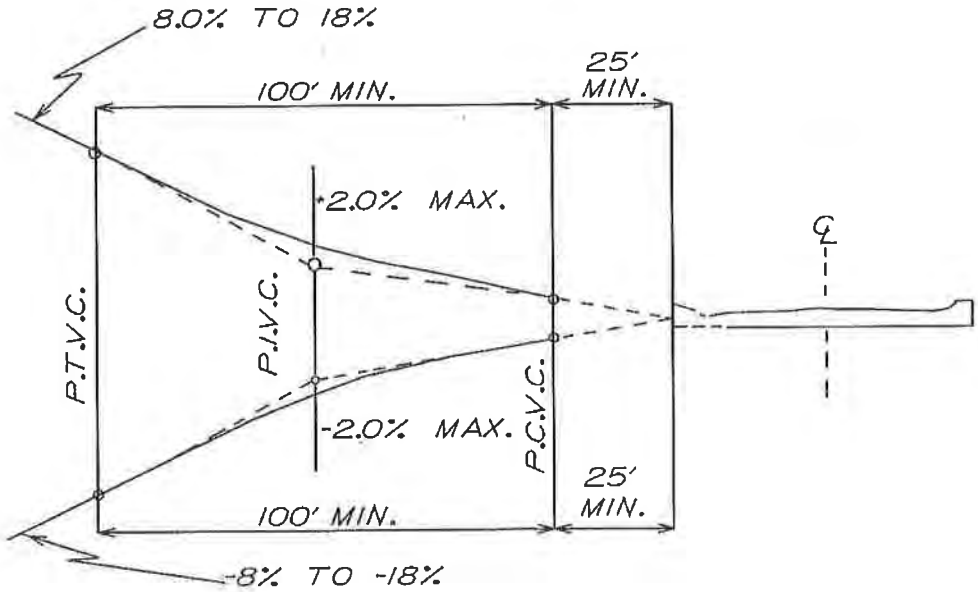

LANDING REQUIREMENTS
FOR GRADES 8.0% TO 18% MAX

NOTE: A 1% landing is allowable.
All other grades are to be 1.5% Min.
For street grades other than a local, refer to Development Standards Section 401.12.02.

COBB COUNTY STATE OF GEORGIA 1832

INTERSECTION LANDING REQUIREMENTS
DETAIL 103

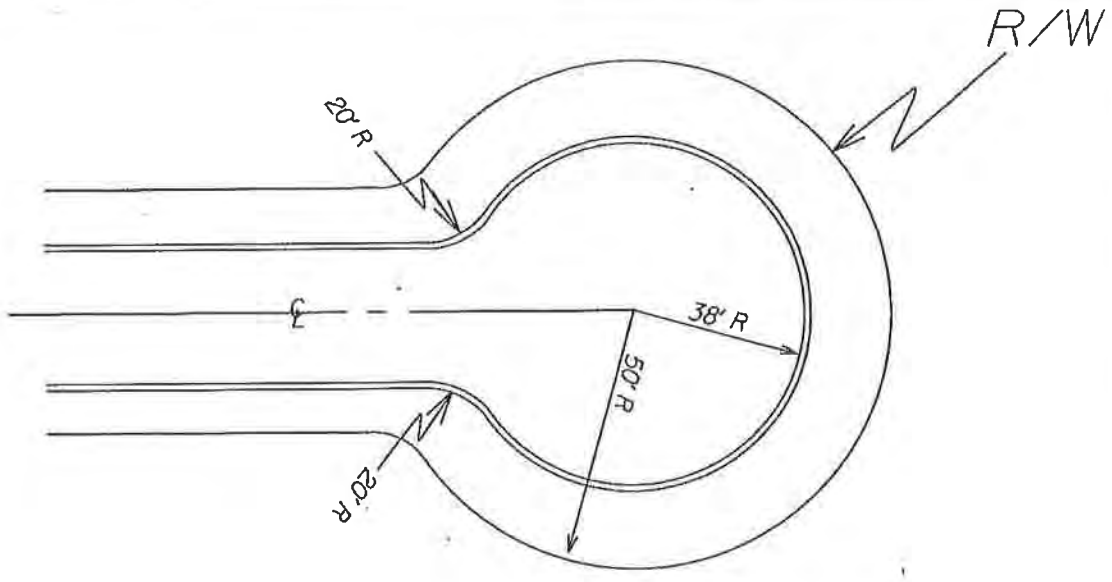

TYPICAL
RESIDENTIAL CUL-DE-SAC
DETAIL 104A

NOTE: Commercial Cul-De-Sac to have a 58' paved radius.
If any Islands are built, the radius must be 25' or greater and is subject to the Fire Department review.

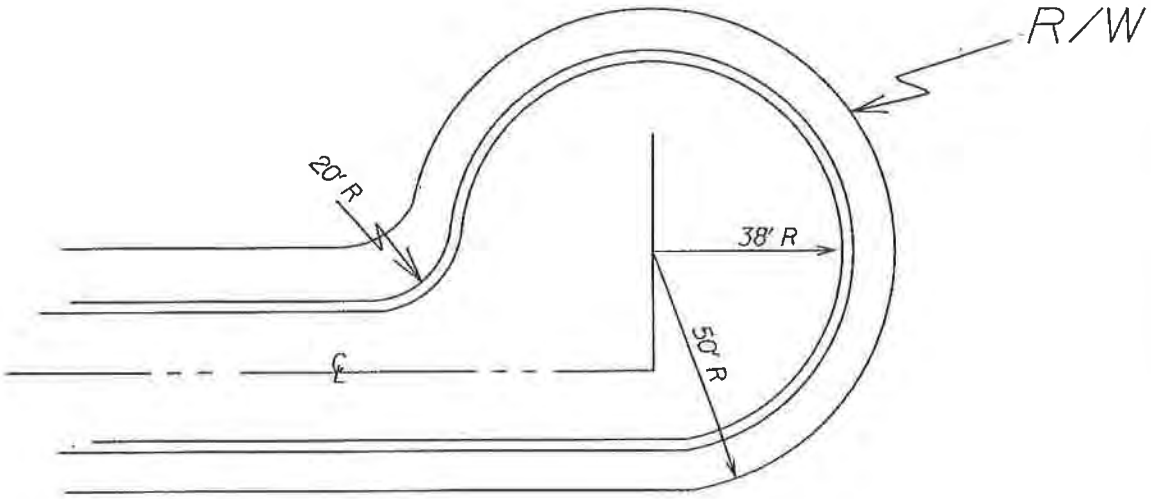

TYPICAL OFFSET CUL-DE-SAC

DETAIL 104B

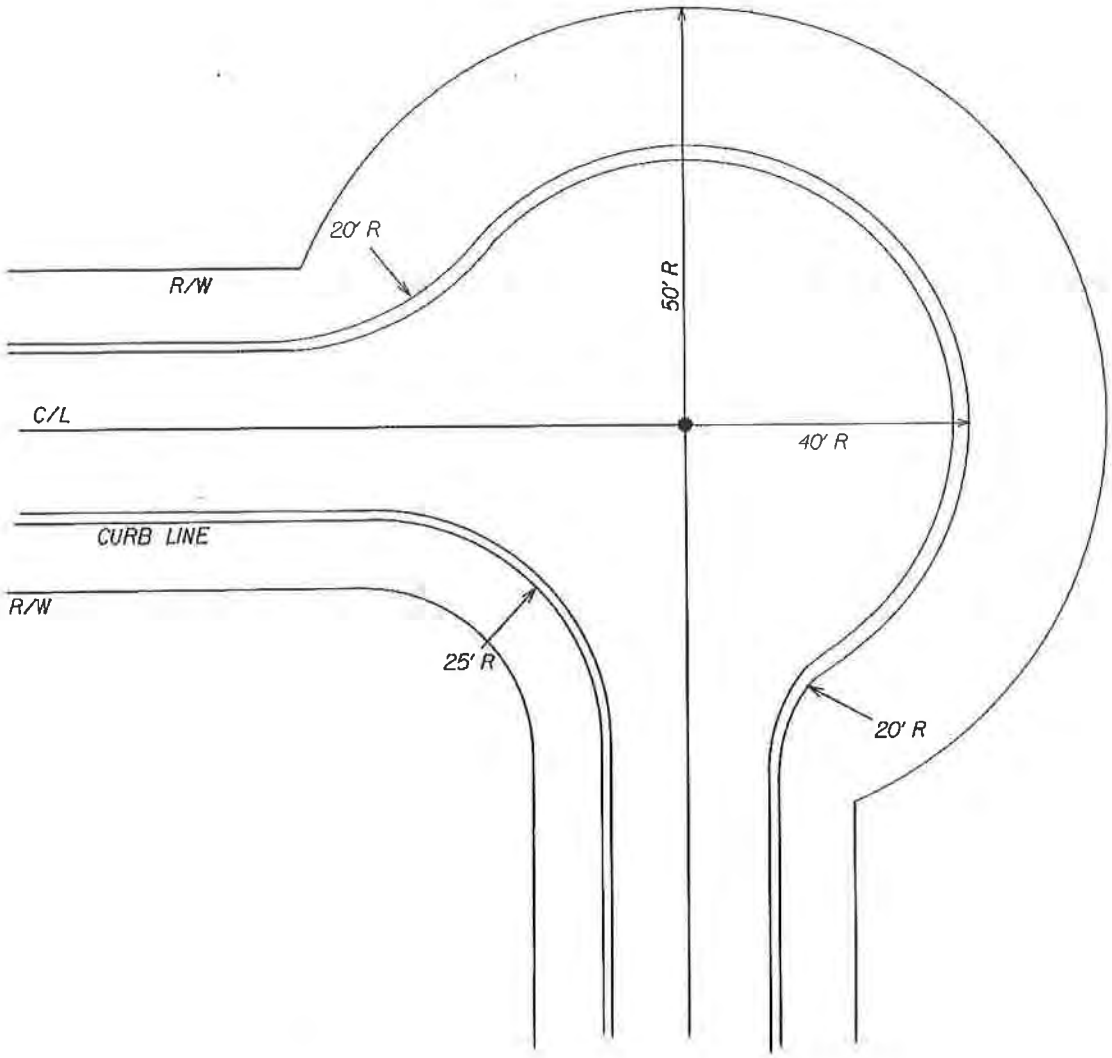

NOTE: Islands are to be maintained by the HOA and require Fire Dept. approval.

BUBBLE CUL-DE-SAC

DETAIL 104C

Right-In/Right-Out Drive Island

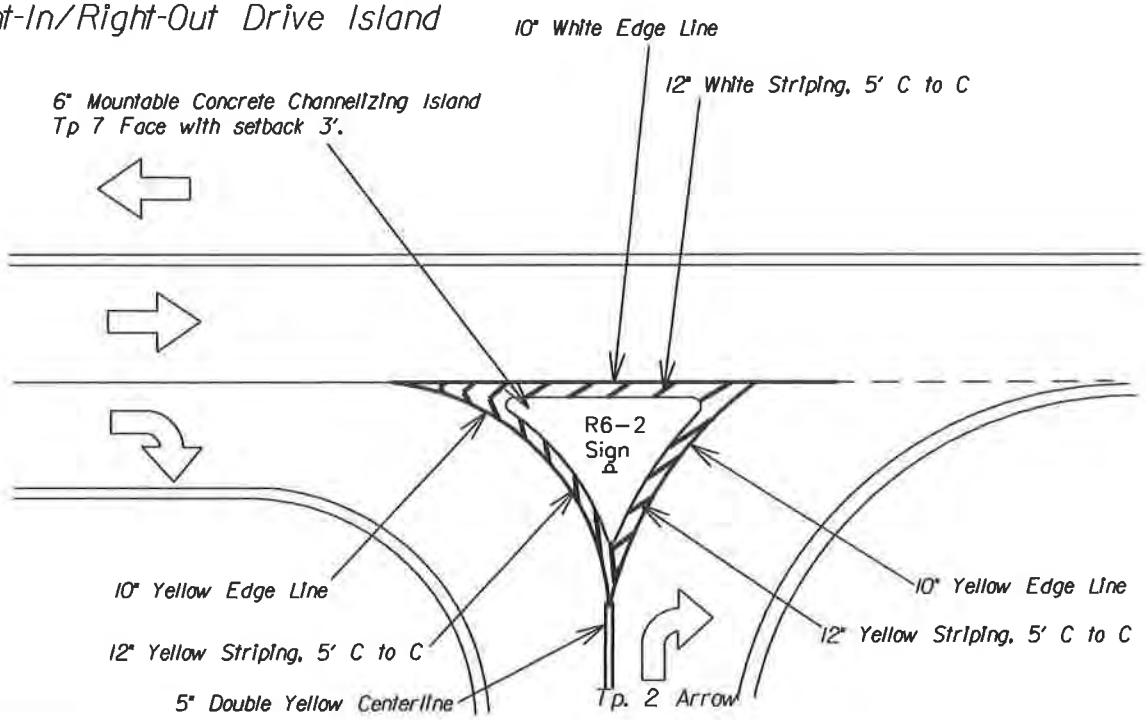

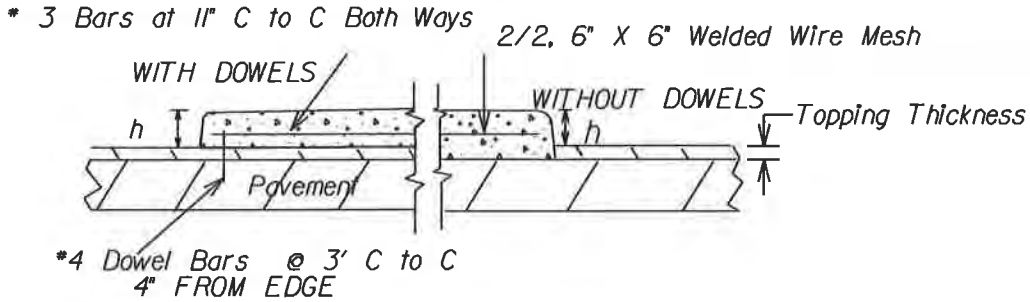

CONCRETE MEDIANS (INTEGRAL)

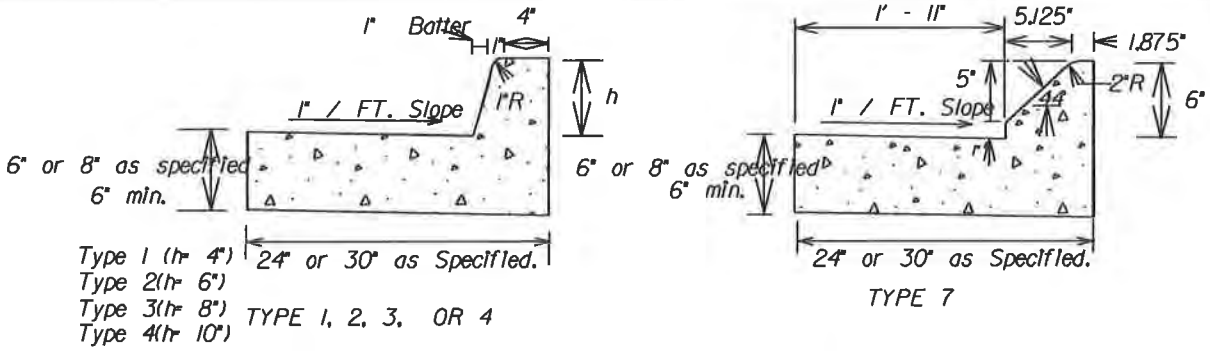

NOTE: 24" Curb will be allowed if 30" is not required by design, CDOT or if tieing into 24".

COBB COUNTY STATE OF GEORGIA 1832

DETAIL 106

CONCRETE CURBS, MEDIANS

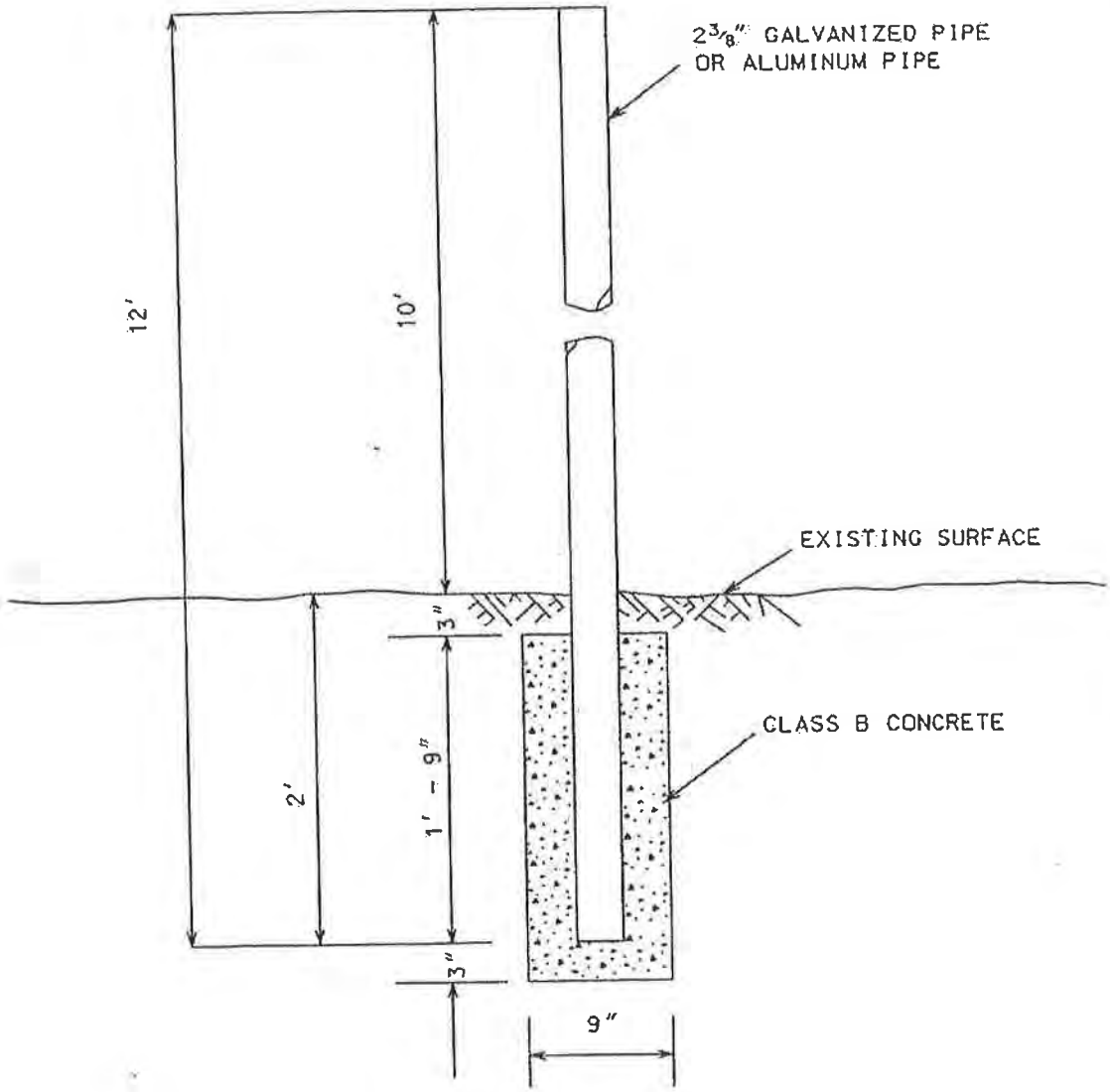

NOTE: Bottom of sign to be a minimum of 7' from ground.
Post to be 10' from edge of pavement.

STREET SIGN BASE

DETAIL 107

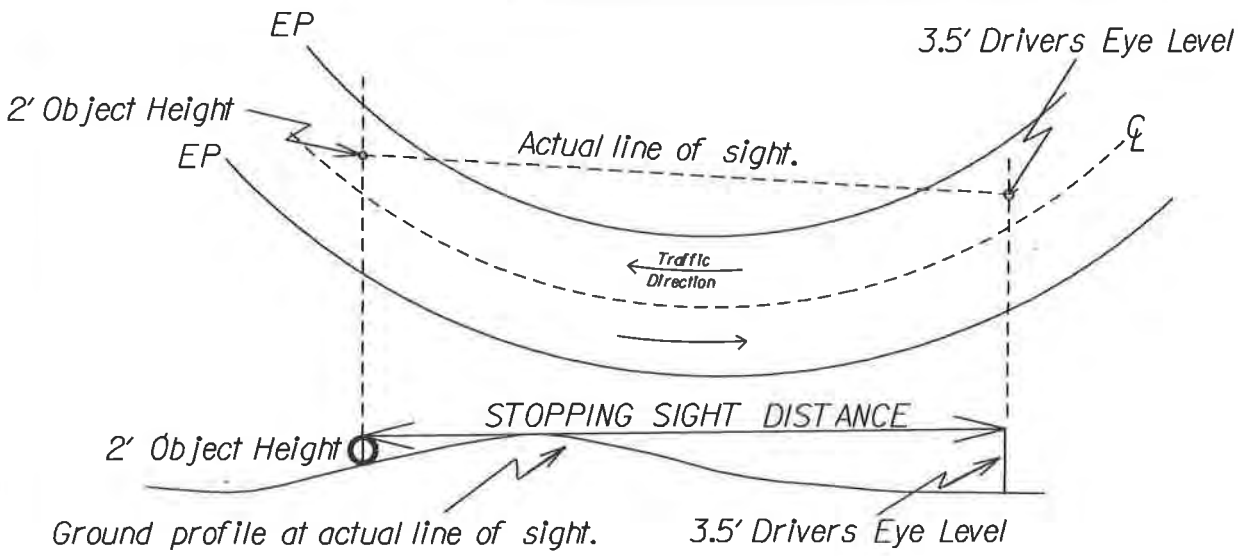

Examples of Horizontal and Vertical Sight Plans

STOPPING SIGHT DISTANCE REQUIRED IN FEET

DESIGN SPEED IN MPH	SIGHT DISTANCE*
25	160'
30	200'
35	250'
40	305'
45	360'
50	425'
55	495'

Source: 2004 AASHTO. Subject to change with AASHTO latest edition.

STOPPING SIGHT DISTANCE is the distance required to see an object 2' in height from a drivers eye level of 3.5' in height and to stop on wet pavement.

*Stopping Sight Distance may be modified in accordance with AASHTO revisions

CDOT may require additional Stopping Sight Distance based on excessive grades, etc.

Based on AASHTO Design.

STOPPING SIGHT DISTANCE REQUIREMENTS

DETAIL 108

There shall be no structure or landscapeing higher than 3'. Nor any obstruction to vision other than a post or tree not exceeding 1' in greatest cross-sectional dimension between a height of 3' and 15' above the established grade of eitherstreet within an area formed by the lot lines on the R/W of such lot and a line joining points on such lot lines located a distance 15' from the point of the R/W intersection.

NOTE: MINUMUM INTERSECTION SIGHT DISTANCE shall be maintained reguardless of blockout zone.

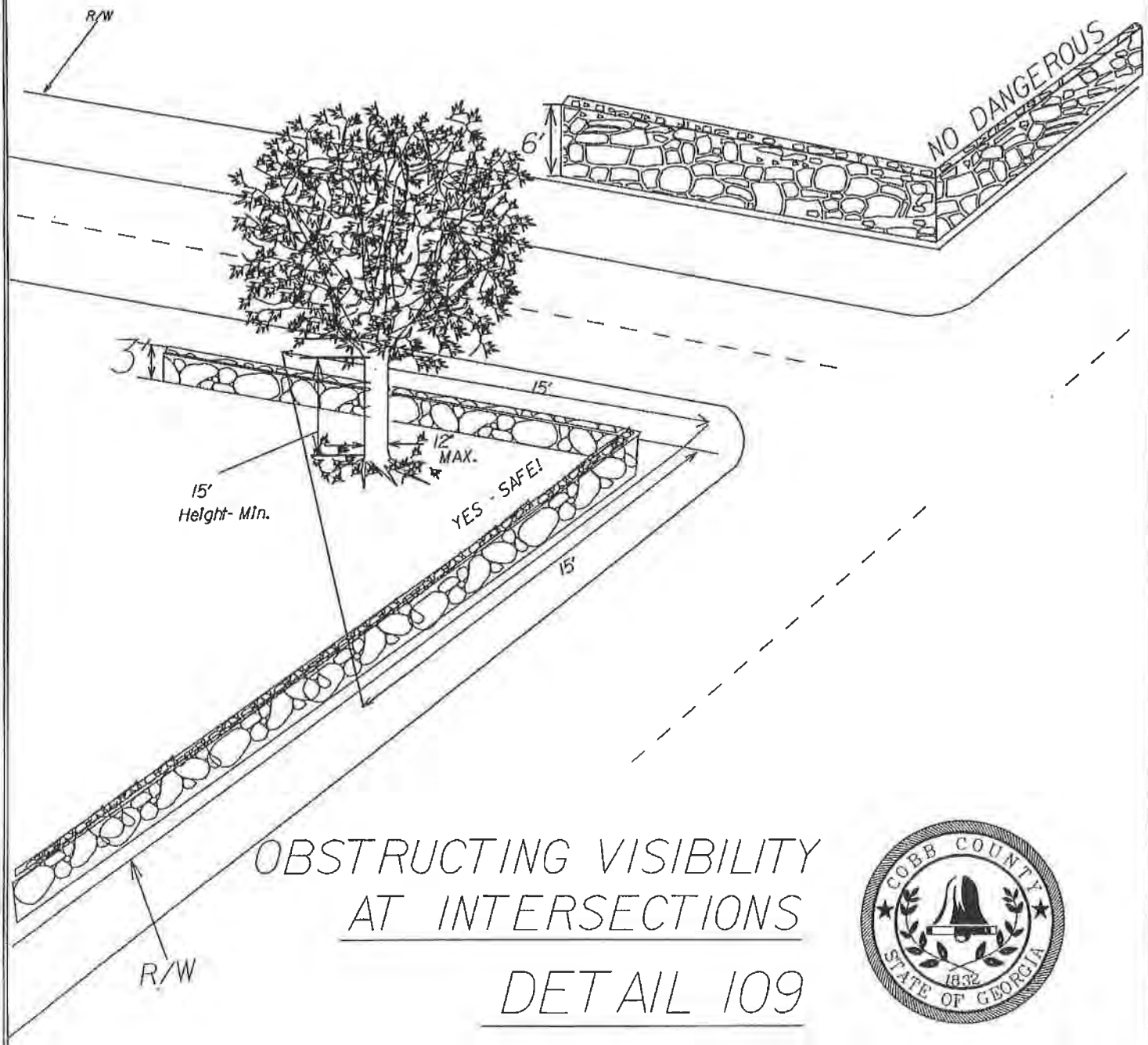

OBSTRUCTING VISIBILITY AT INTERSECTIONS

DETAIL 109

COBB COUNTY STATE OF GEORGIA 1832

Length of overall barricade to be determined by actual field conditions.

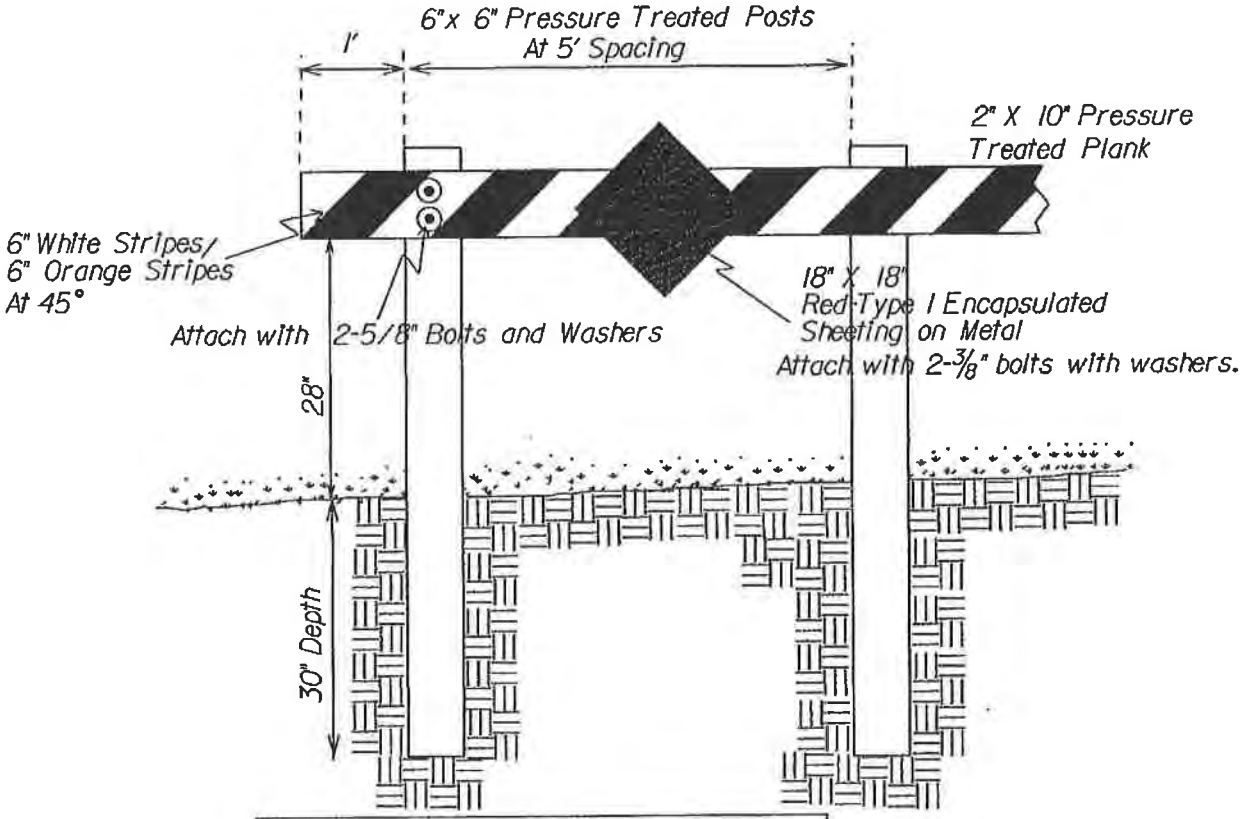

NOTE:
Guardrail can be used as alternate.
Post shall be GDOT "Type D" steel
Plank shall be GDOT Std.W-Beam 4011
with reflectors in lieu of chevrons.

COBB COUNTY STATE OF GEORGIA

STREET BARRICADE DETAIL 110

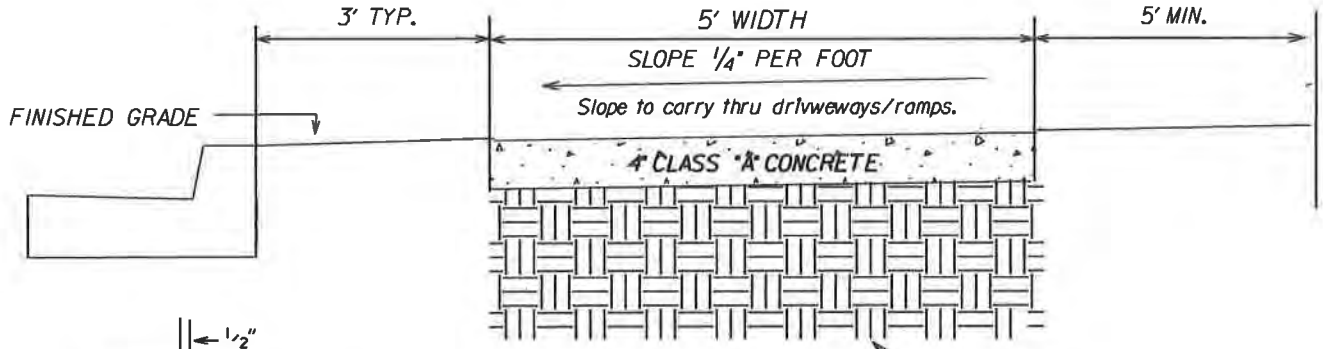

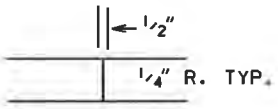

EXPANSION JOINT

TYPICAL SECTION

COMPACTED SUBGRADE

EXPANSION JOINT MATERIAL TO BE 1/2" BITUMINUS PRODUCT.

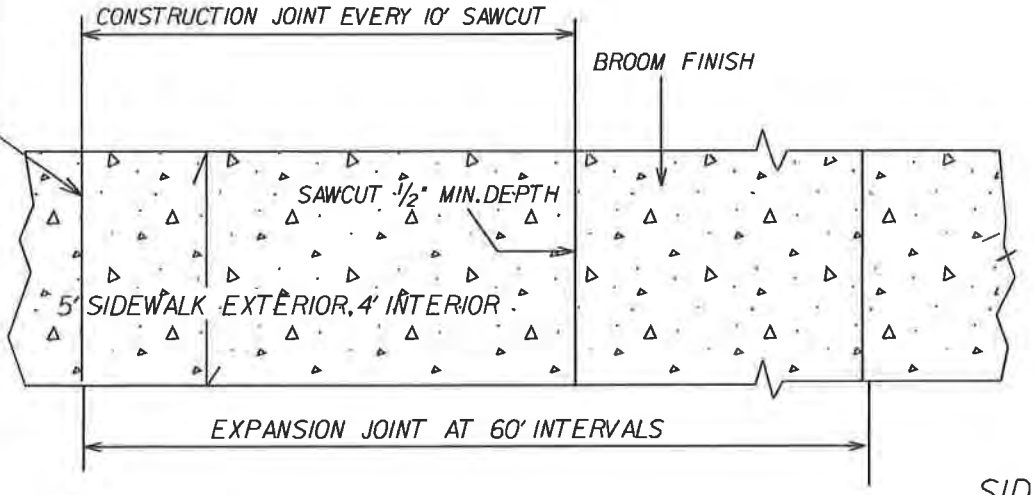

PLAN VIEW

Maintain 2% Sidewalk/Shoulder cross-slope thru Driveways/Ramps.
To meet all ADA Standards.

NOTE: ACCESS RAMPS ARE TO BE PLACED AT ALL DRIVES, INTERSECTIONS AND AT ALL CURB ENCROACHMENTS. SEE GEORGIA DOT STANDARD A3 (FKA STANDARD 903W).

WHERE UTILITY STRUCTURES CONFLICT, WHERE SIDEWALK GEOMETRY VARIES AT SKEWED INTERSECTIONS OR IN OTHER SPECIAL CASES, THE SIDEWALK/RAMP MAY BE MODIFIED BY THE DESIGNER, PROVIDED THE WIDTH REMAINS CONSTANT AND NO PART OF THE RAMP IS STEEPER THAN 12:1.

1/2" EXPANSION MATERIAL SHALL BE PLACED WHERE SIDEWALK TIES INTO A STRUCTURE OR TERMINATES AT CURB, RAMPS OR DRIVEWAYS OR AT 60' MIN.

*Detectable Warning surface shall color contrast visually with adjoining surfaces, either light-on-dark or dark-on-light.

SIDEWALK RAMP DETAIL

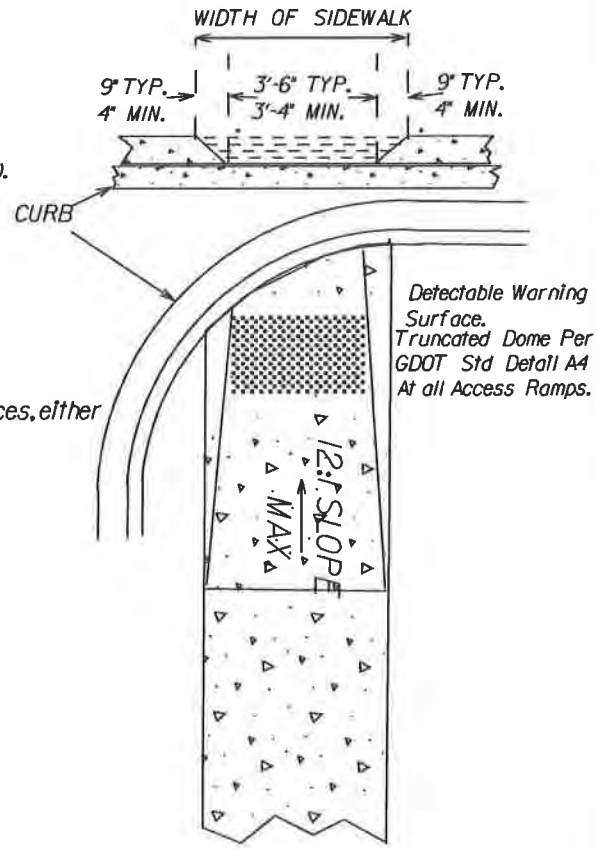

COBB COUNTY STATE OF GEORGIA

SIDEWALKS

DETAIL 113

Parallel Parking space

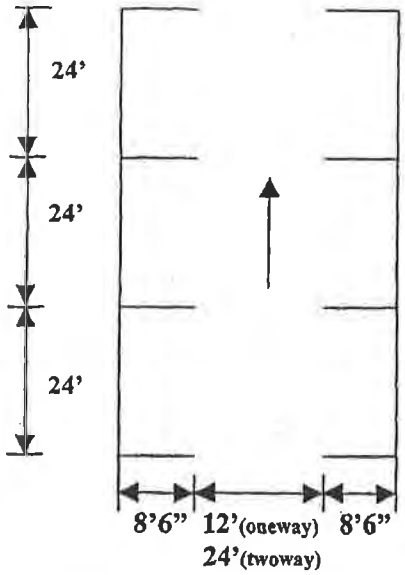

90° Parking space

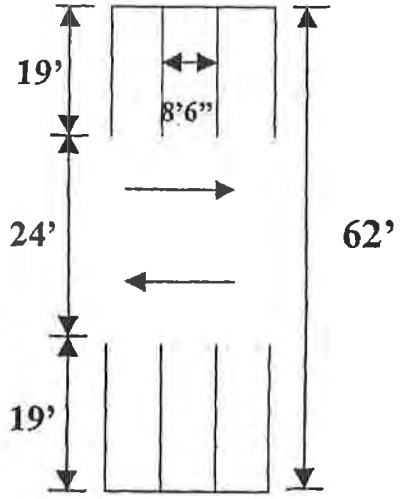

45° Parking space

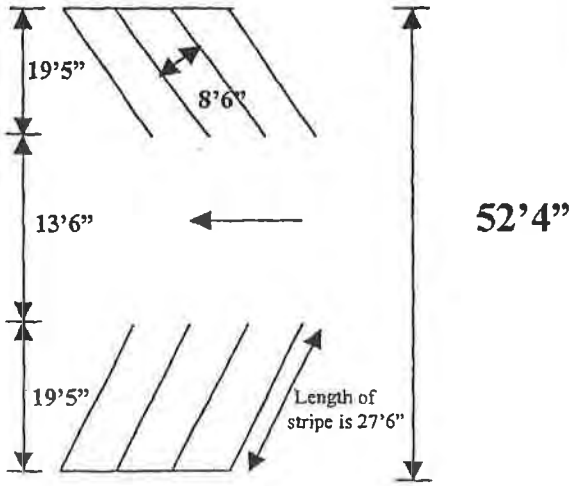

60° Parking space

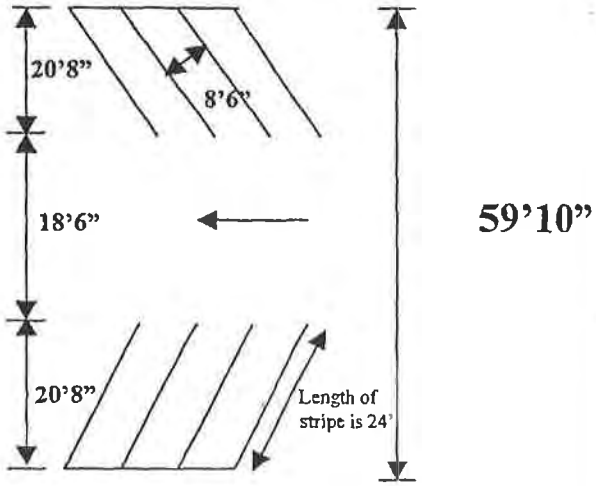

COBB COUNTY STATE OF GEORGIA

DETAIL 114

OFF STREET PARKING

NOTE: See section 402 for access restrictions to a thoroughfare.
Residential drive to be per GDOT STD.6050. See Section 402.07.01 for Specs.

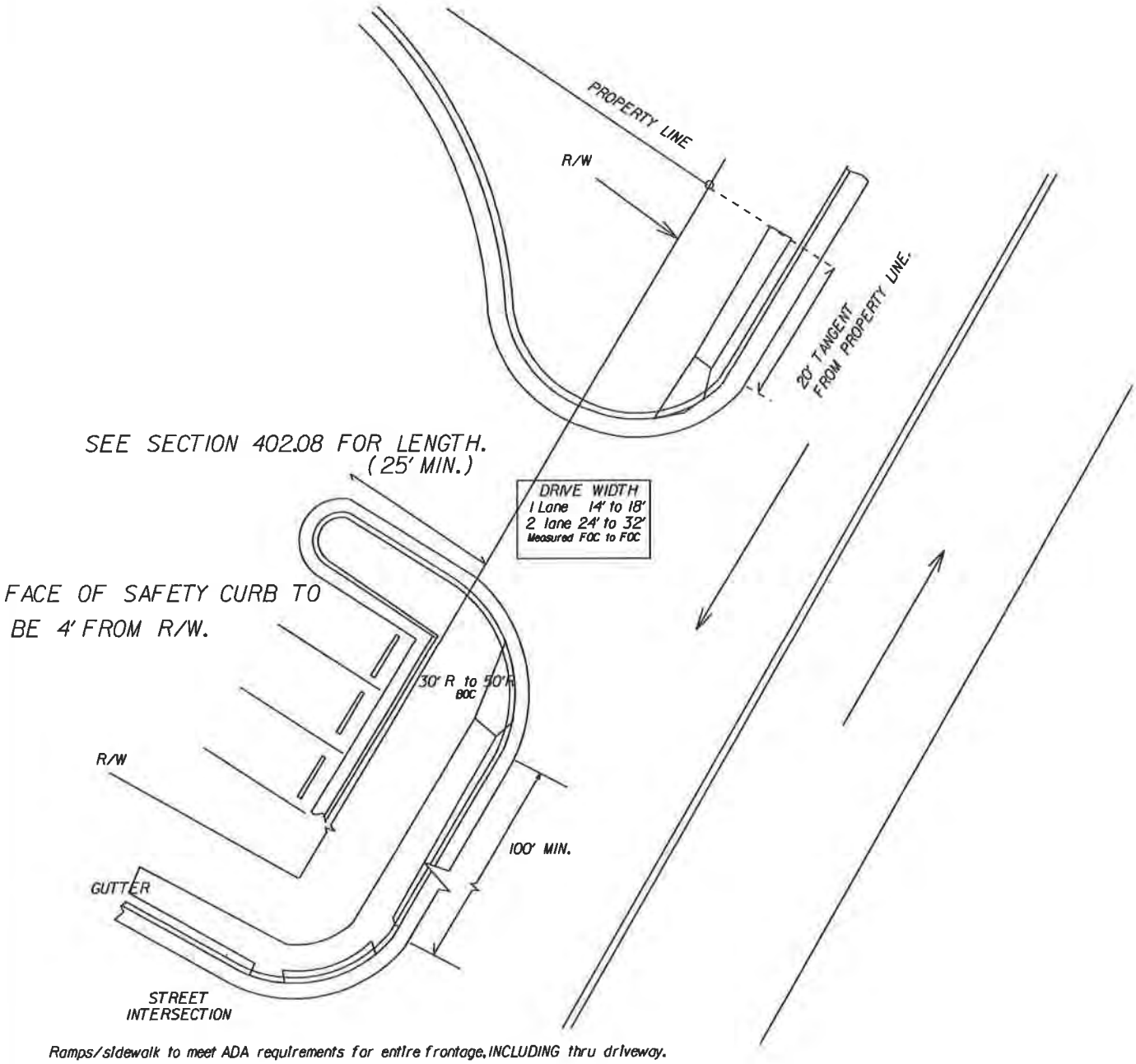

Ramps/sidewalk to meet ADA requirements for entire frontage, INCLUDING thru driveway.
Sidewalk/Ramps Cross-slope AND Driveway grade/Cross-slope not to exceed 1/4" per 1 Linear Foot.
Shoulder Cross-Slope to be 1/4" per 1 Linear Foot.

COBB COUNTY 1832 STATE OF GEORGIA

COMMERCIAL DRIVEWAY REQUIREMENTS

DETAIL 116

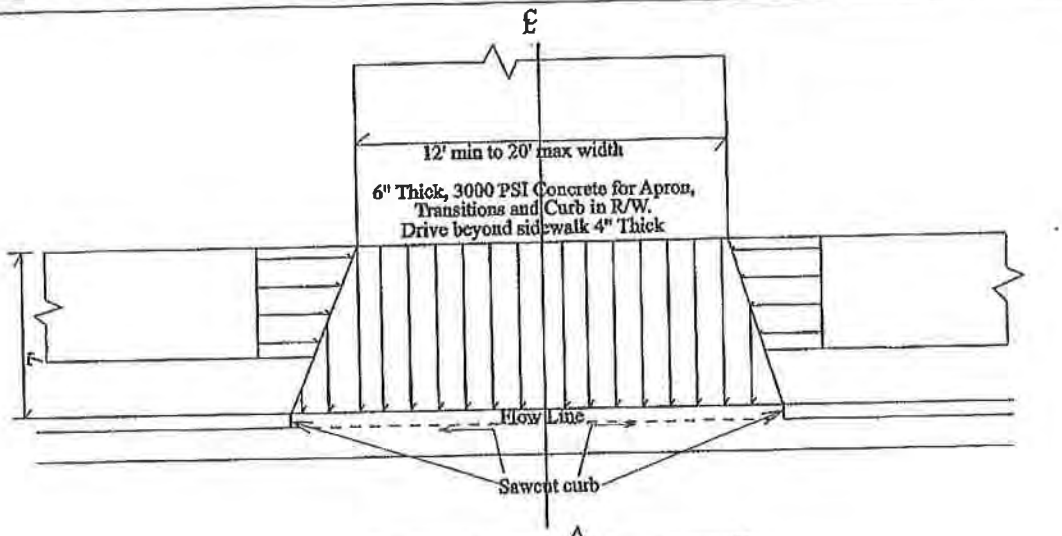

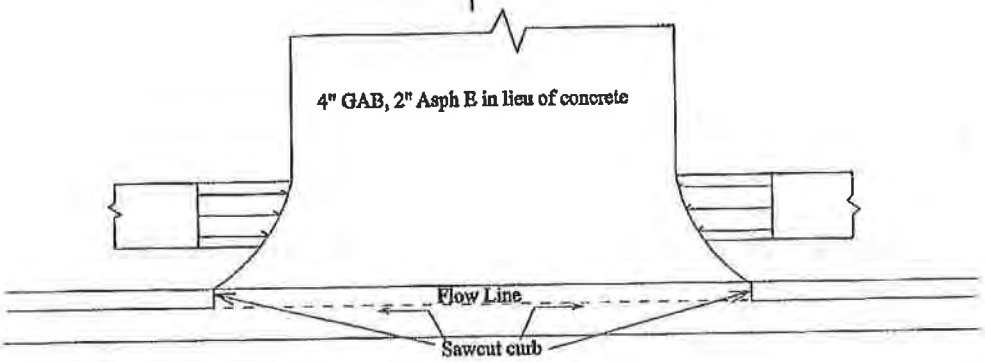

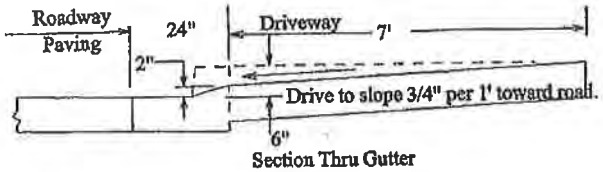

Section Thru Gutter with Curbed Roadway.

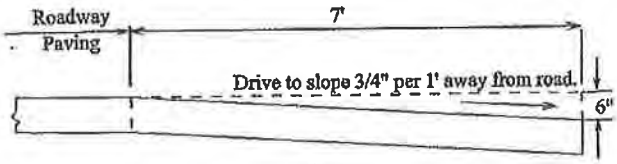

Section Thru Drive without curb on Roadway.
No portion of drive shall extend into the road.

NOTES

1. Apron slope to match shoulder or 3/4" per LF.
2. See Cobb Detail 113 for access ramp spec.
3. Traffic control to meet MUTCD requirements.
4. Drive to be no closer than 50' to an adjacent intersection.
5. For access to a Major Thoroughfare submit to CDOT, Plan Review Division, for other requirements and review.
6. No structural obstructions (Fences, Signs, Walls, irrigation) allowed in the R/W. Only low growing seasional landscaping allowed.
7. Cobb County will not maintain driveway.
8. Lane Closure Permit is required from CDOT, Utility Division 770-528-1643.
9. Drainage structures are not allowed within drive limits. Conflicts to be reviewed by DOT.
10. Final appearance to have a smooth, solid, clean joint.

DETAIL 116R

Residential Driveway Standard

NOTE:
Landscaping to be approved by County Arborist
Drainage to be per roadway spec

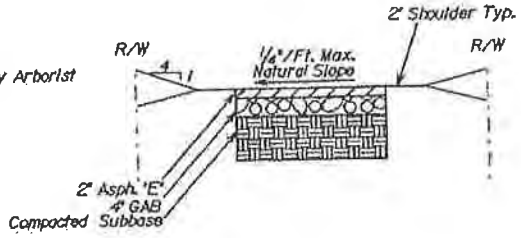

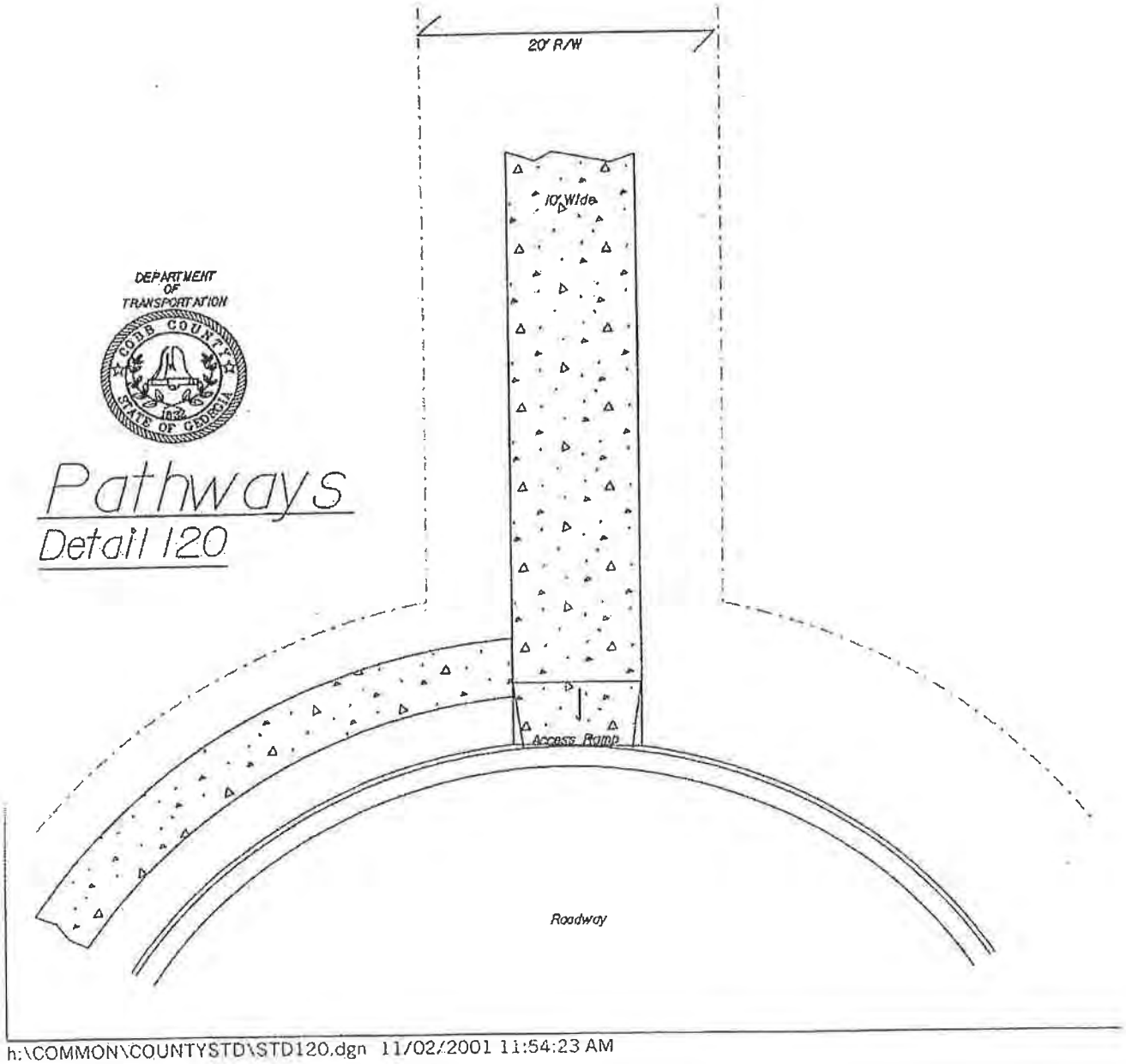

DEPARTMENT OF TRANSPORTATION
COBB COUNTY
STATE OF GEORGIA

Pathways
Detail 120

h:\COMMON\COUNTYSTD\STD120.dgn 11/02/2001 11:54:23 AM

Interior Residential R/W signage to be placed by CDOT Operations Section, prior to Building Permits.
Contact CDOT Signing and Marking Section- 770-528-1761, 1672, 1673 or 1674 to coordinate.
Aesthetic Signs, at developers expense, may be approved by permit only.
NO permanent traffic control devices (Signs, Striping, etc.) to be placed without CDOT Operations approval.

'Informal Parking' is allowed, but is not designated.
Residential access only.
20 MPH design speed.
125' Stopping Sight Distance.
90' Min. Centerline Radius.
15' Intersection Radius

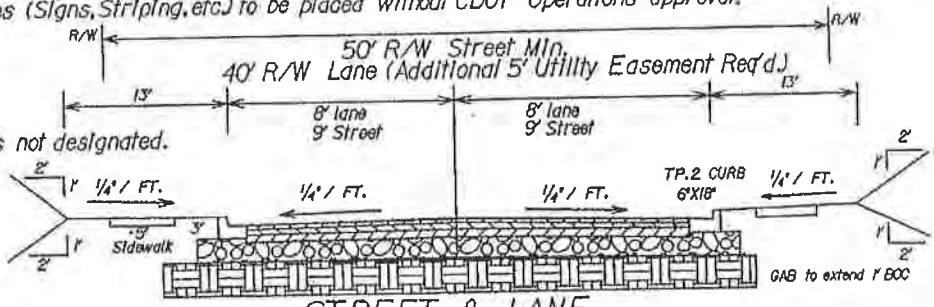

STREET & LANE

6' sidewalk required which abuts the curb.
Stopping Sight Distance required per Std.108
Intersection Sight Distance required per Std.401B
All landscaping and ISD shall be maintained by the HOA
Bike lane to utilize a different mix or color.
Streets with bike lanes shall have 28' min. width.
Planting strip behind the curb shall be 6' min.

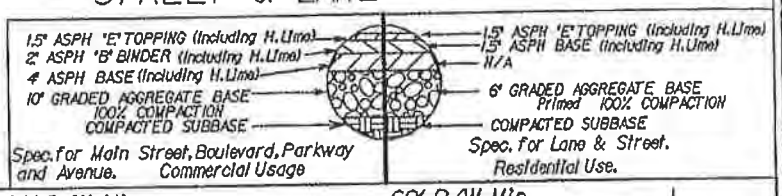

Spec. for Main Street, Boulevard, Parkway and Avenue. Commercial Usage

Spec. for Lane & Street. Residential Use.

Residential and Commercial mixed use.
30MPH Design speed.
Bike Lane is optional.
On-street parking is marked and striped.
On-street parking is optional in all catagories.
6' Min. Planting Strip required if landscaped.

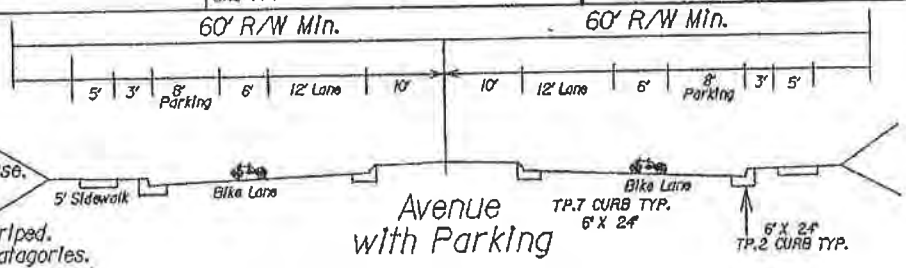

Avenue with Parking

On-street parking is marked and striped.
Residential and Commercial mixed use.
25MPH Design speed.

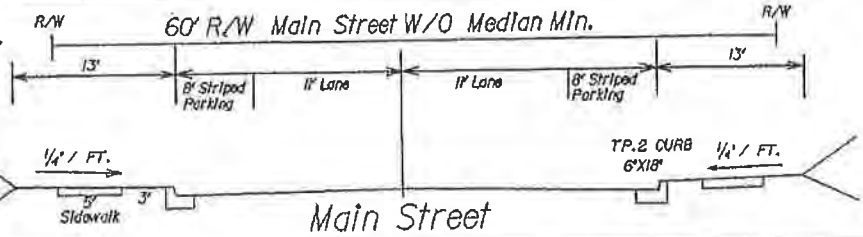

Main Street

On-street parking is marked and striped.
Commercial use only.
35MPH Design Speed.

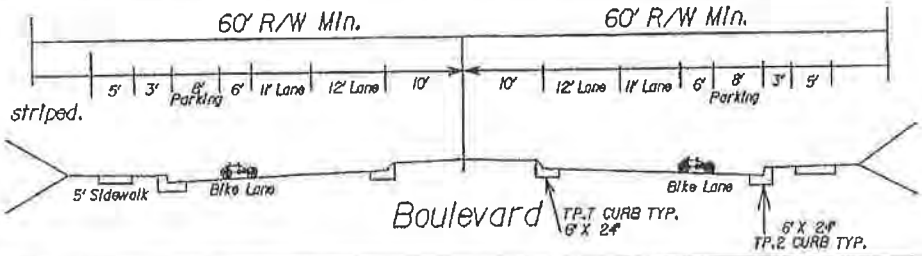

Boulevard

No on-street Parking.
Commercial use only.
50MPH Design Speed

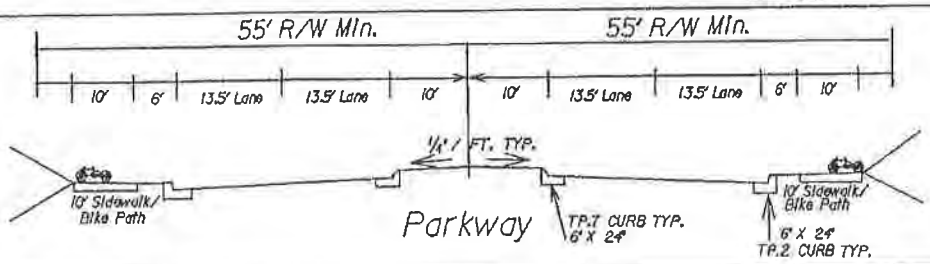

Parkway

DEPARTMENT OF TRANSPORTATION
COBB COUNTY
STATE OF GEORGIA

Traditional Neighborhood Development (TND)
Typical Section- Detail 150

h:\COMMON\COUNTYSTD\STD150.dgn 12/10/2001 02:40:55 PM

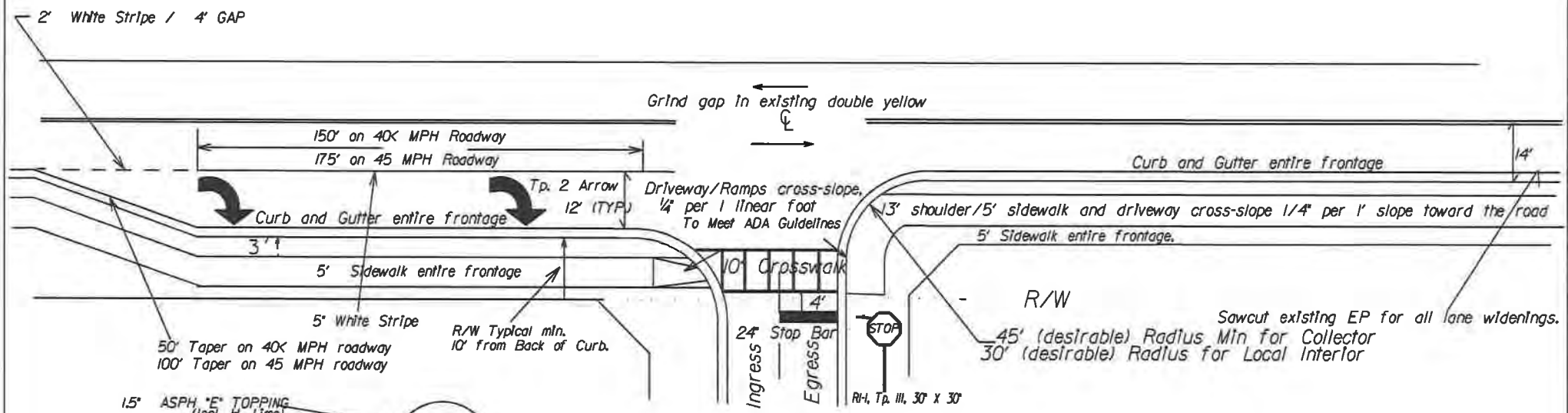

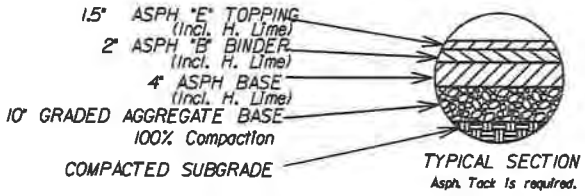

1) ALL PAVEMENT MARKINGS ARE TO BE THERMOPLASTIC.
2) TRAFFIC CONTROL DEVICES, SIGNS, SIGNALS AND MARKINGS SHALL CONFORM TO "MANUAL OF UNIFORM TRAFFIC CONTROL DEVICES FOR STREETS AND HIGHWAYS" (MUTCD) REQUIREMENTS, LATEST EDITION.
3) SIDEWALK REQUIRED PER THE SIDEWALK ORDINANCE.
4) ALL CONFLICTING MARKINGS ARE TO BE OBLITERATED AND DUPLICATE SIGNS REMOVED.
5) ROAD FILL COMPACTION TO BE 95% UP TO TOP 12" AND 100% FOR TOP 12" (STD. PROCTOR)
6) ALL EXTERIOR ROAD FRONTAGES ARE TO BE CURBED AND SIDEWALKED.
7) NEW LANE CROSS-SLOPE TO MATCH EXISTING ROAD CROWN OR SUPERELEVATION.
8) GAB to extend 1' behind curb.
9) Guardrail is required where warranted per GDOT Std or Site Inspector.
10) ALL ACCESS POINTS/DRIVES ARE SUBJECT TO FURTHER RESTRICTION AS DEEMED NECESSARY BY CDOT OR GaDOT TO INSURE SAFE, FUNCTIONAL DESIGN AND EFFICIENT OPERATION.
11) ACCEL LANE MAY BE REQUIRED, ON A CASE BY CASE BASIS.
12) All poles are to be 8' minimum from BOC.
13) S/D street signage shall be provided by the developer.
DEVELOPER TO SUBMIT NEW STREET SIGNAGE PLAN TO CDOT, OPERATIONS DIV. FOR REVIEW AND APPROVAL.
FINAL PLAT SHALL BE HELD TILL APPROVED SIGNAGE IS IN PLACE, PER NOTE 2.

COBB COUNTY STATE OF GEORGIA 1832

ACCELERATION & DECELERATION LANES

DETAIL 401A

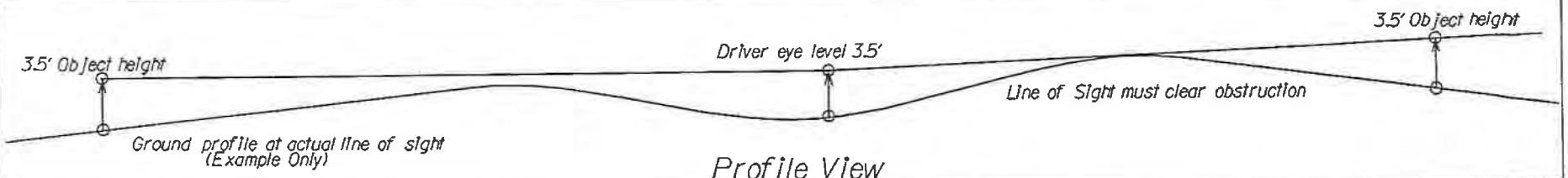

Profile View

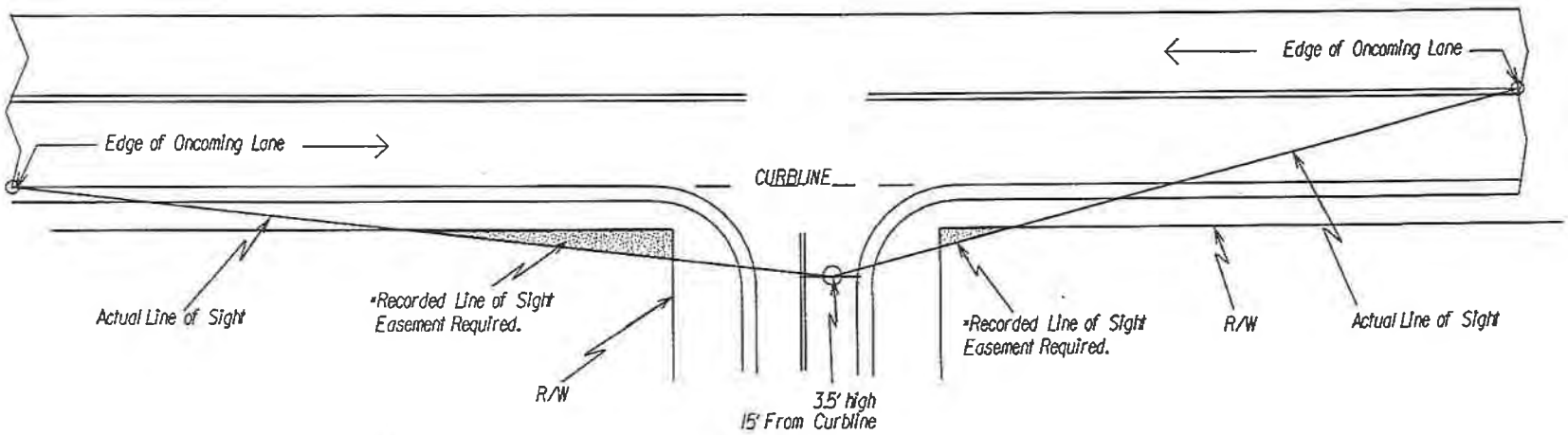

Plan View

ISD Easements are required for areas outside the R/W.

* Line of Sight Easement shown for example. The specific location, curvature of roadway, etc. shall determine easement limits.

Intersection Sight Distance (ISD) shall be measured from a point established 15' from the curbline of the egress lane, at a 3.5' height above finished grade. The actual Line of Sight is then extended in a straight line, the minimum required distance to both sides of the abutting street along the thoroughfare to the edge of the oncoming travel lane of threat, terminating at a point 3.5' above finished grade. Approach grades are to be shown on profile.

Approach Grades of 3.1% up to 12% are to be increased by 10%. Approach Grades exceeding 12.1% shall be reviewed by CDOT.

Further calculation factors, type vehicles, lanes crossed, divided median, etc. are to be considered in requirement.

CCDOT reserves the right to make adjustments based on AASHTO requirements, Latest Edition.

	INTERSECTION SIGHT DISTANCE in FEET		
SPEED LIMIT	2 lane	3 & 4 lane	5 & 6 Lane
45 MPH	500'	560'	630'
40MPH	445'	500'	560'
35MPH	390'	440'	490'
30MPH	335'	----	----
25MPH	280'	----	----

Distances are for undivided roads.

COBB COUNTY STATE OF GEORGIA 1832

DETAIL 401B
INTERSECTION SIGHT DISTANCE (ISD)

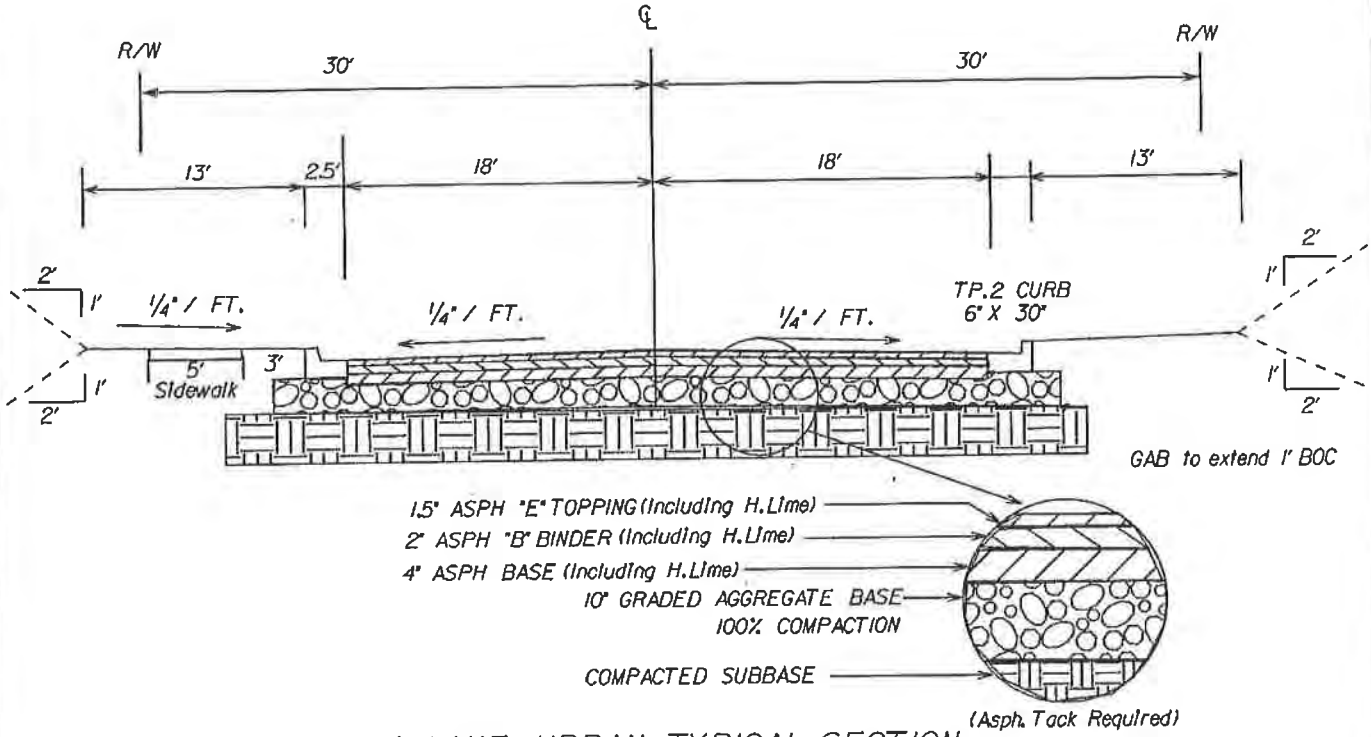

3 LANE URBAN TYPICAL SECTION

DETAIL 401.C

NOTE: 8" curb may be required by CDOT
Median areas less then 7' wide are to have 4" Concrete Median Paving.
Pavement Spec. is for all Dedicated Commercial/Industrial Roads and Accel/Decel Lanes and Road Widenings.
24" Curb to be allowed if not required by design, CDOT or if tieing into 24".
Road fill compaction to be 95% up to top 12" and 100% for top 12" (Std Proctor).
All road construction, materials and methods are subject to testing and tolerances in accordance with GDOT Standard Specifications, latest edition.
Guardrail is required per AASHTO Specs. or site inspector meeting GDOT Spec.

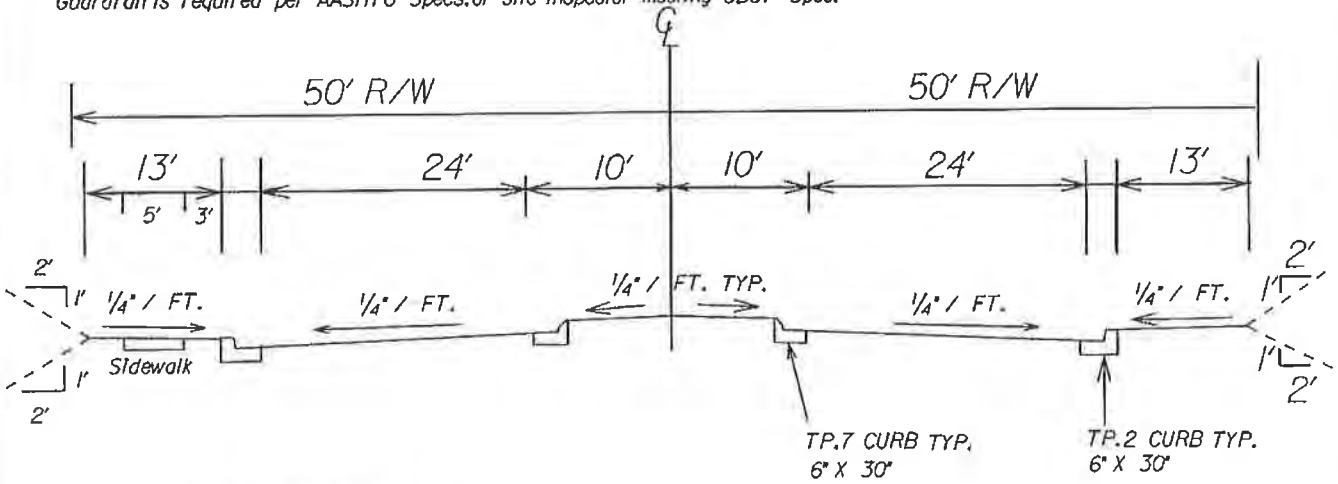

4-LANE DIVIDED 20' MEDIAN

DETAIL 401.D

COBB COUNTY STATE OF GEORGIA 1832

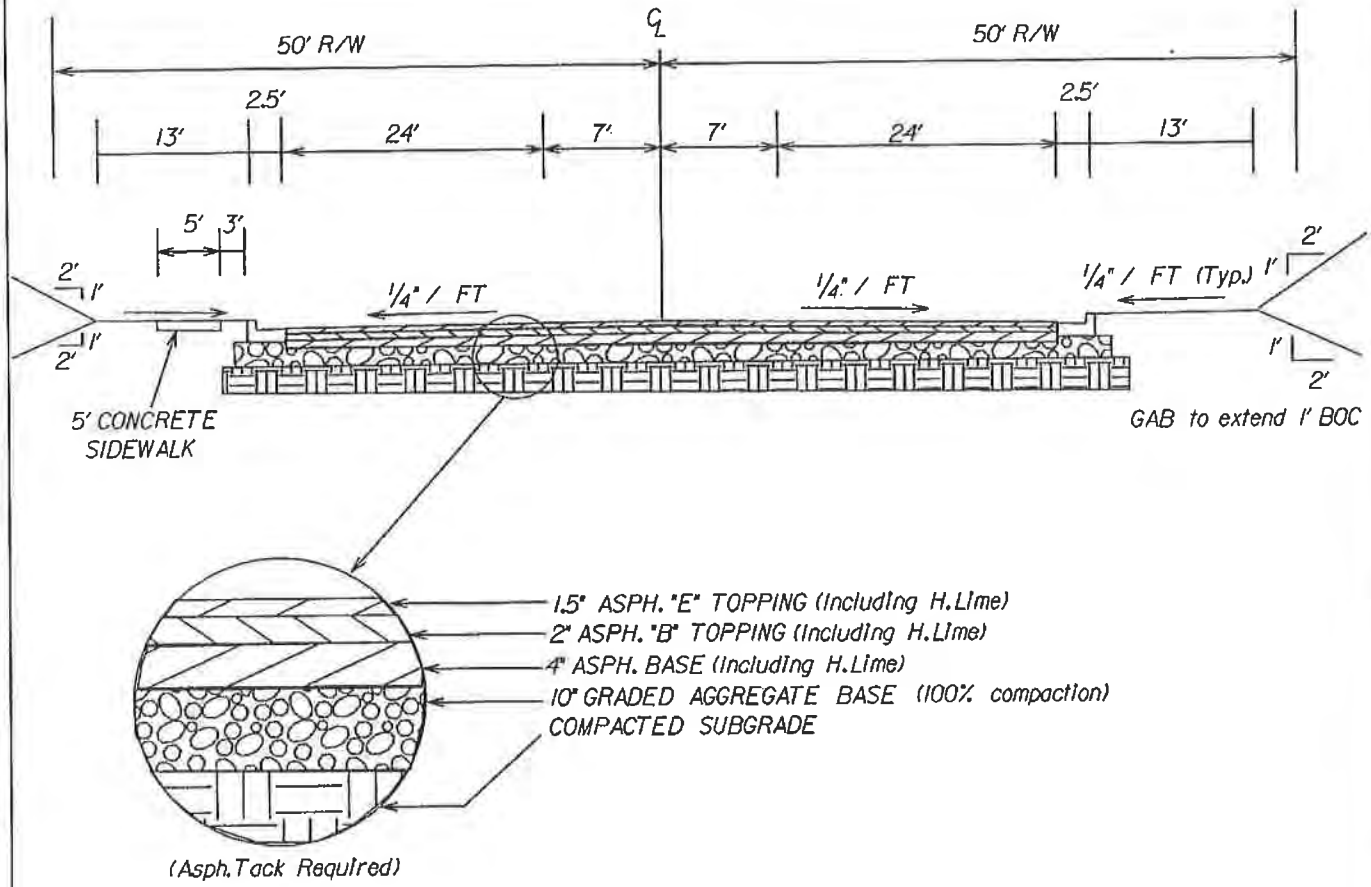

NOTE: 8" Curb may be required.
24" Curb will be allowed if not required by design,CDOT or if tieing into existing 24".
Road fill compaction to be 95% up to top 12" and top 12" to be 100% (Std.Proctor).
Guardrail is required as warranted per GDOT Std or Site Inspector.

COBB COUNTY STATE OF GEORGIA 1832

5-LANE URBAN

DETAIL 401E

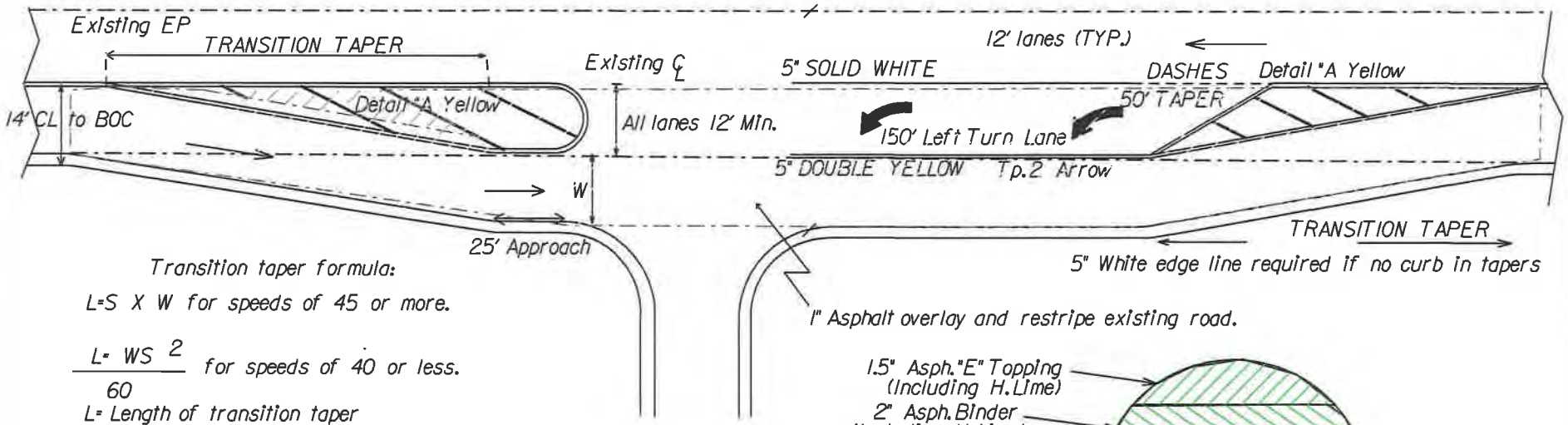

Transition taper formula:

L=S X W for speeds of 45 or more.

$L = \frac{WS^2}{60}$ for speeds of 40 or less.

L= Length of transition taper

W= Width of offset

S= Speed limit

All striping to be Thermoplastic.

Conflicting markings are to be obliterated.

Existing pavement to be milled where curb exists at overlay section.

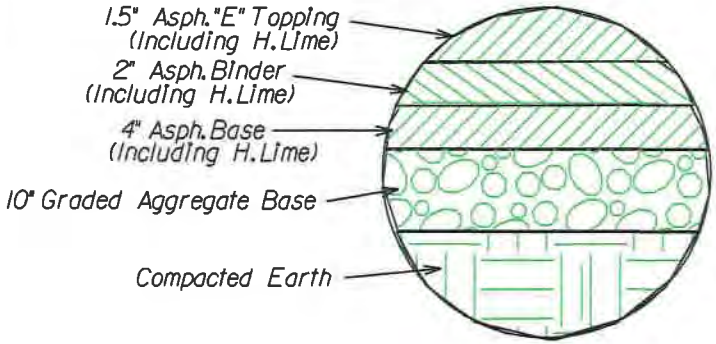

DETAIL 401F

LEFT TURN LANE

TYPICAL SECTION

G:\Countystd\std401f.dgn 9/28/2011 1:56:16 PM

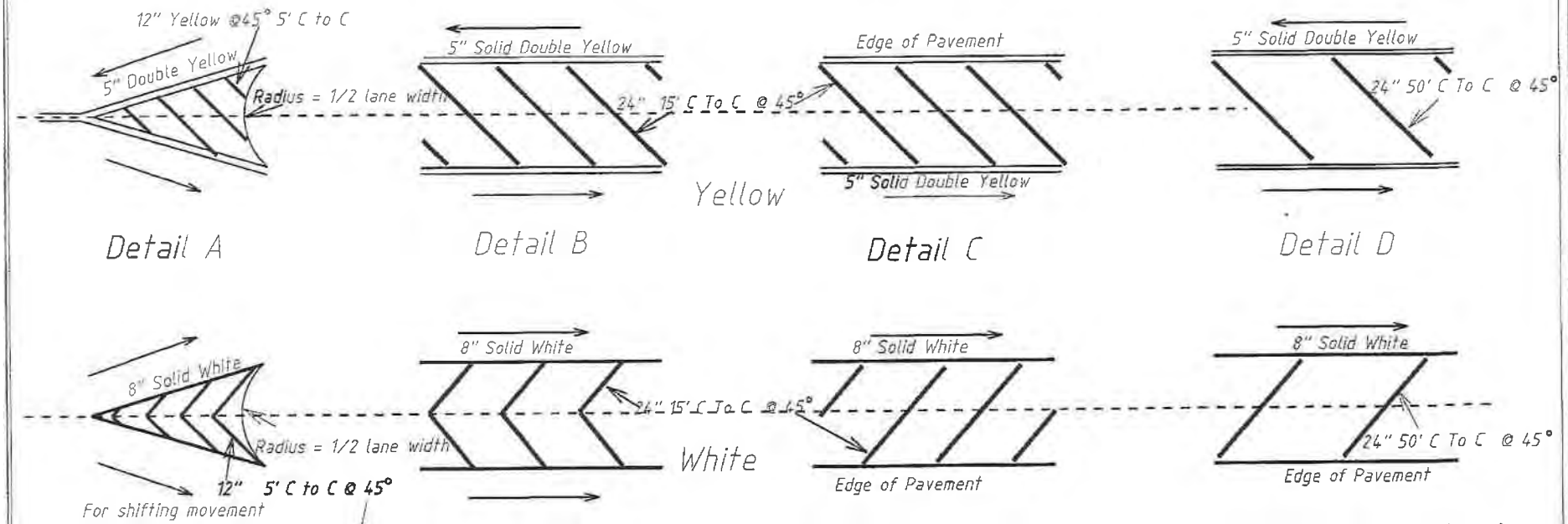

PAVEMENT MARKINGS DETAIL 401P

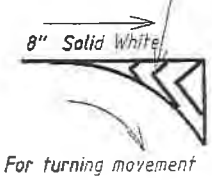

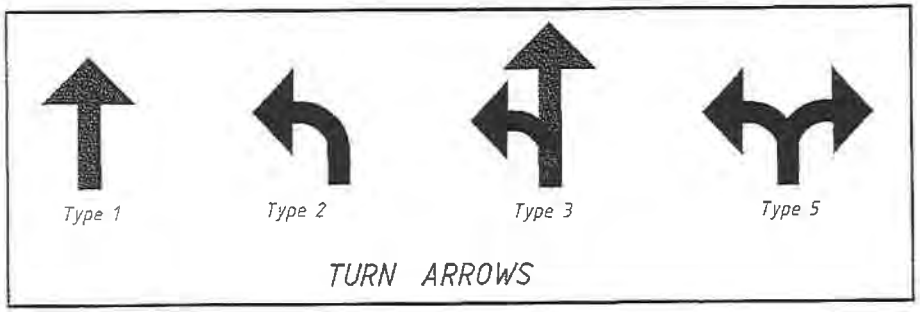

NOTES

← Traffic Flow

All Striping to be Thermoplastic

Arrow dimensions per GDOT Spec.

C to C = Center to Center

CALL CDOT OPERATIONS, 770-528-1675 FOR CLARIFICATION

STOP BAR and CROSSWALK DETAIL

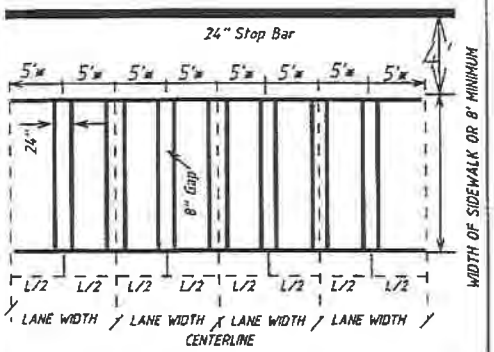

*USED WHEN THE LANE WIDTH EXCEEDS 12' OR NO STRIPES EXIST
All Striping 8" Solid White Thermoplastic

Stop Bar and Crosswalk are required if at - 1) A Signal, 2) A Multiway Stop or 3) If sidewalk exists.

LEGEND

- TYPE 1 TWO-WAY YELLOW RPM
- TYPE 1 TWO-WAY WHITE RPM
- TYPE 2 ONE-WAY YELLOW RPM
- TYPE 2 ONE-WAY WHITE RPM
- TYPE 3 WHITE/RED RPM
- DIRECTIONAL ARROW
- PAVEMENT ARROW
- TYPE 10 8" REFLECTIVE WHITE SYMMETRIC MARKER
- SKIP LINE OR SOLID LINE

NOTE: ALL RPM'S SHALL BE STIMSONITE 948 OR EQUAL.

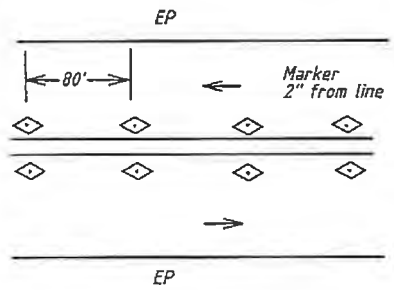

Centerline Patterns
Combination RPM/Stripe System, Multilane, Two-way

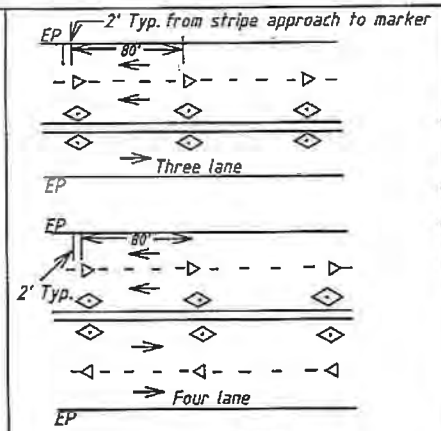

RPM Pattern for 2-Way Roads

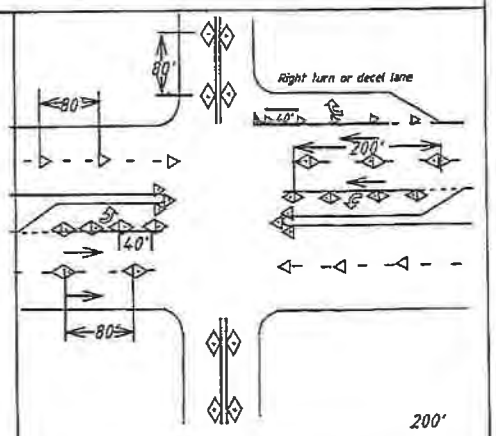

RPM patterns for left turn lanes at Medians

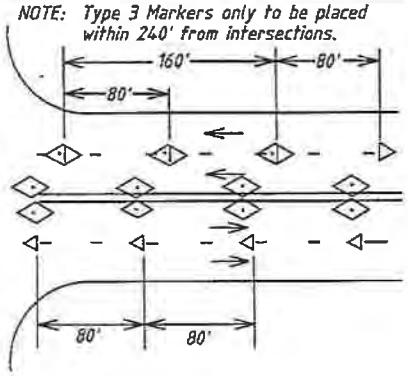

RPM pattern for intersection approach
Four lane, 2-way roads.

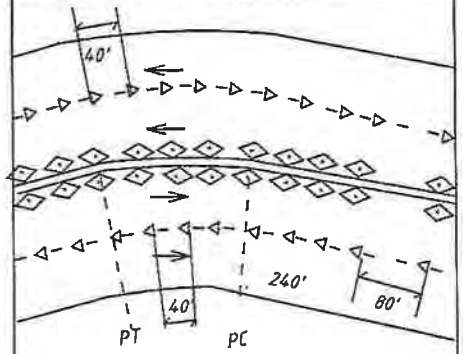

RPM pattern for horizontal curves 6 Degrees or greater curvature (Dc).

Reflective portion of marker to be installed facing traffic. Markers to be placed only in islands where stop signs will be erected inside striped island.

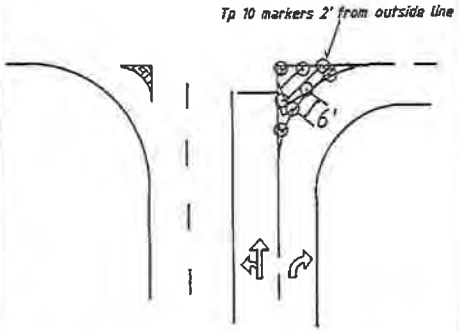

Symmetric marker in striped island.

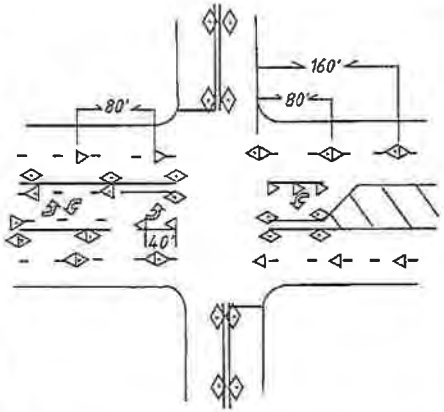

RPM patterns for two-way left turn lanes and left turn lane.

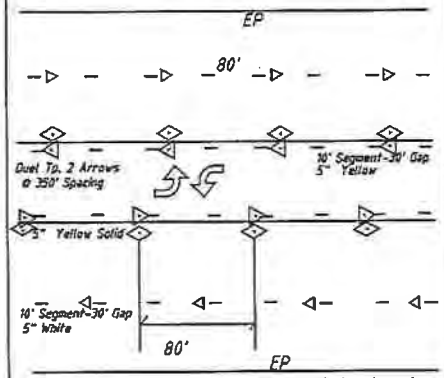

5" Solid White line @ EP if no curb is placed

Striping & RPM design for duel left turn lane

COBB COUNTY STATE OF GEORGIA

Raised Pavement Markers

DETAIL 401R

Detail 416 – 1
Community Development Agency

TREE PLANTING

May, 2001
Effective Date

Typical Section

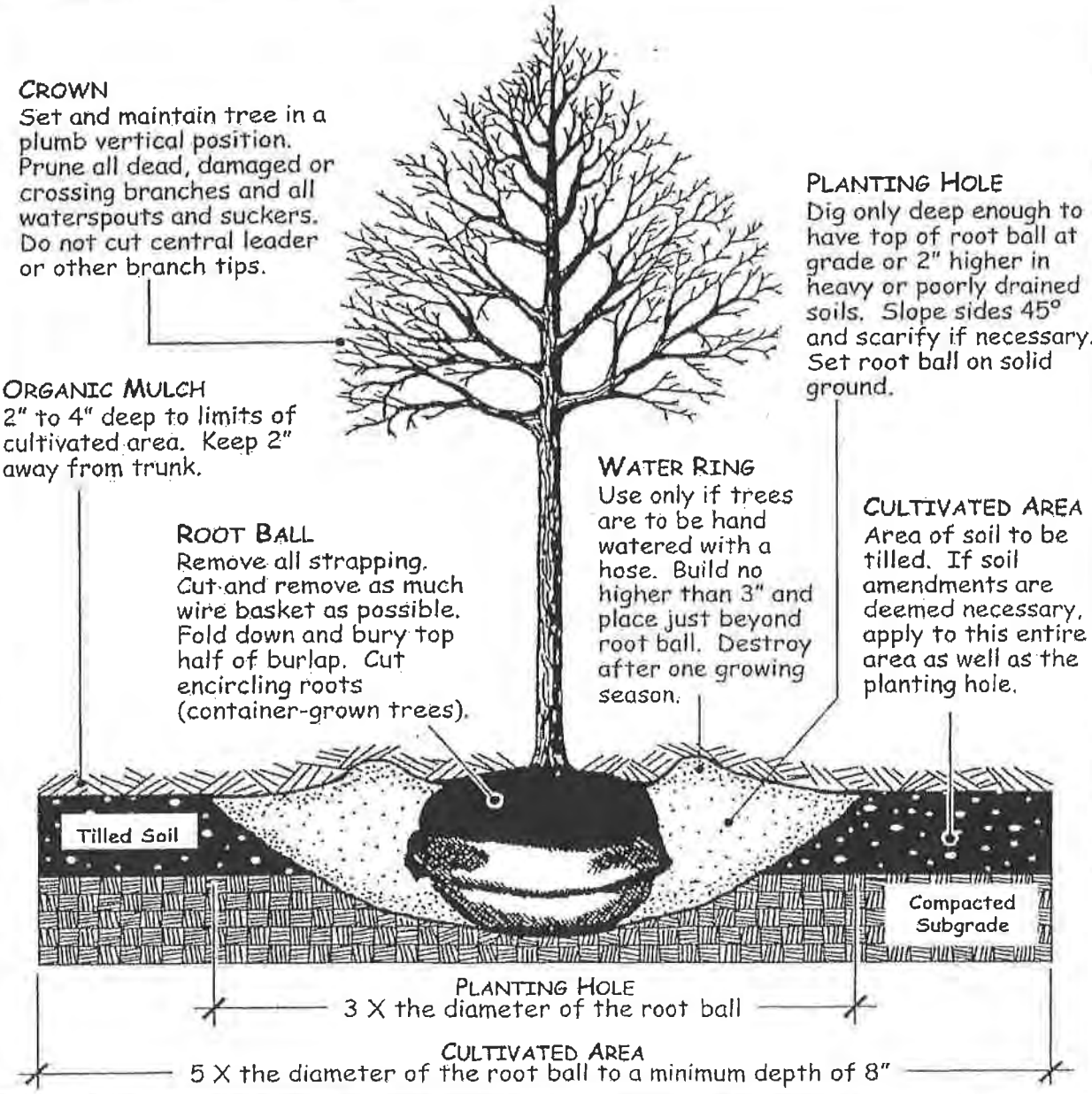

Detail 416 – 2

Community Development Agency

TREE ANCHORING –TYPE A

For trees up to 1 inch caliper

May, 2001
Effective Date

Typical Section

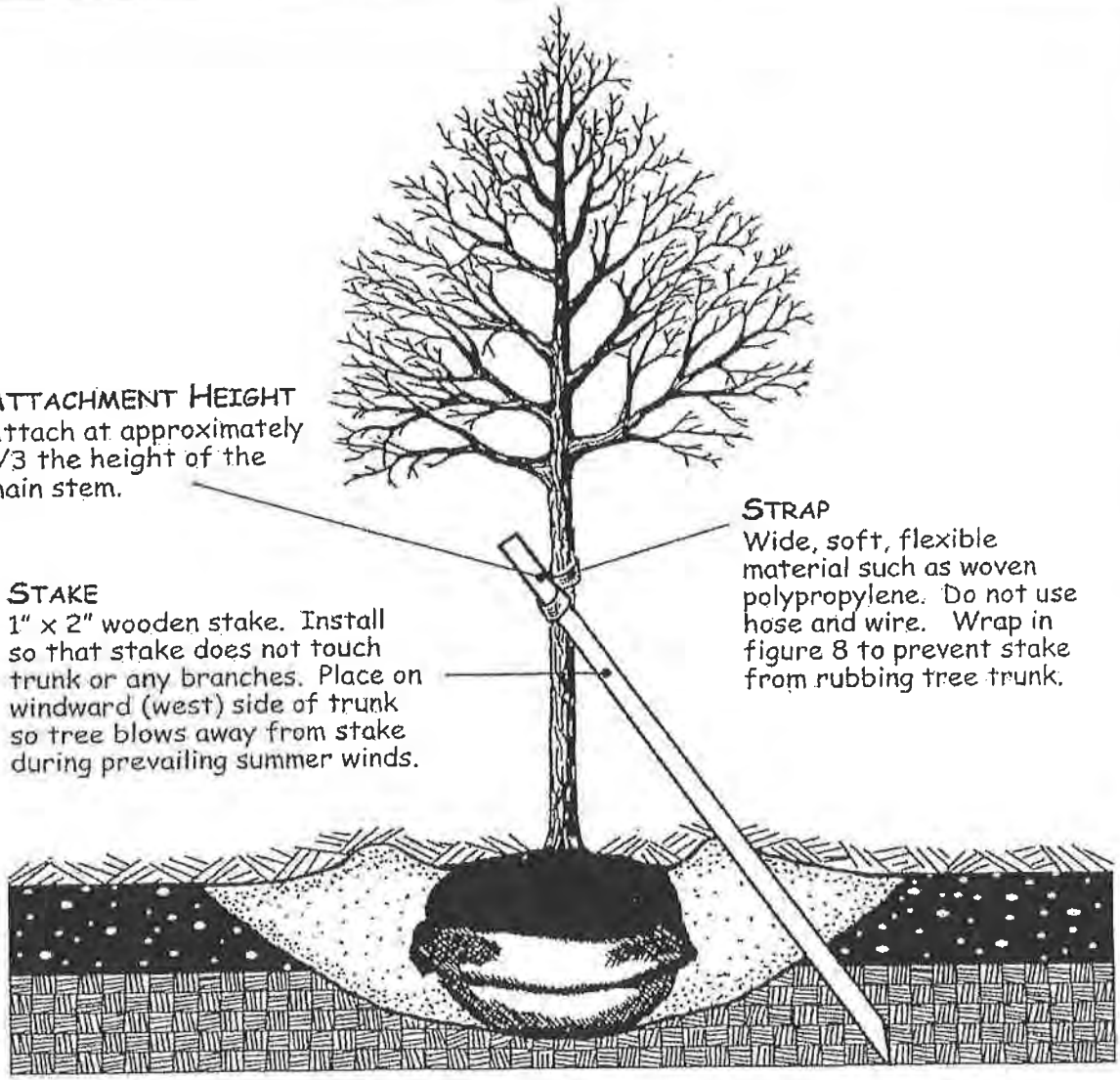

Use anchoring systems only where wind or soil conditions make it necessary. Remove after one year.

Detail 416 – 3

Community Development Agency

TREE ANCHORING – TYPE B

For trees up to 2 inches caliper

May, 2001
Effective Date

Typical Section

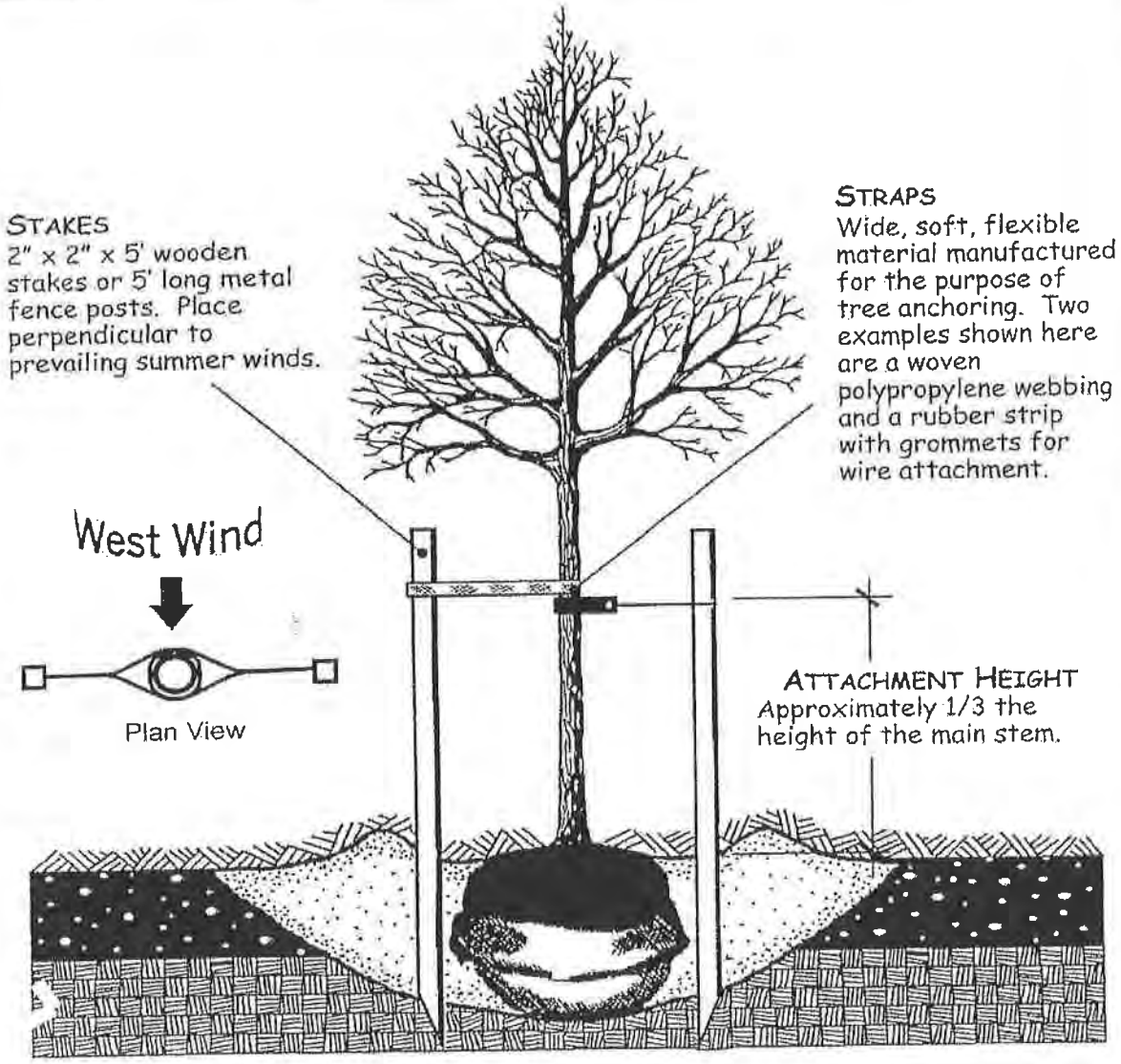

Use anchoring systems only where wind or soil conditions make it necessary. Remove after one year.

Detail 416 – 4

Community Development Agency

TREE ANCHORING – TYPE C

For trees larger than 2 inches caliper

May, 2001
Effective Date

Typical Section

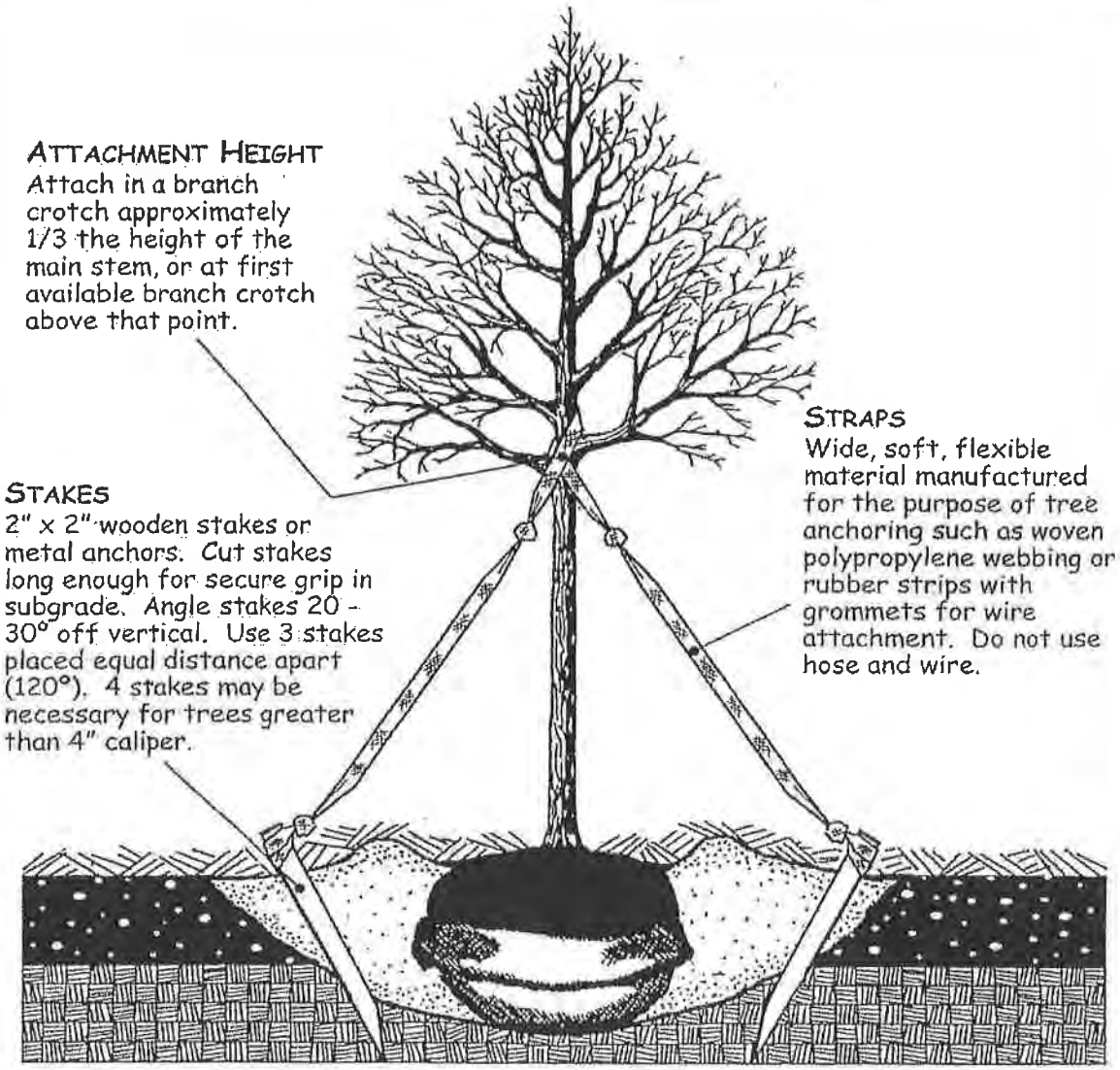

Use anchoring systems only where wind or soil conditions make it necessary. Remove after one year.

Detail 416 – 5

Community Development Agency

TREE ANCHORING – TYPE D

For container grown trees or B&B trees up to 2 inches caliper

May, 2001
Effective Date

Typical Section

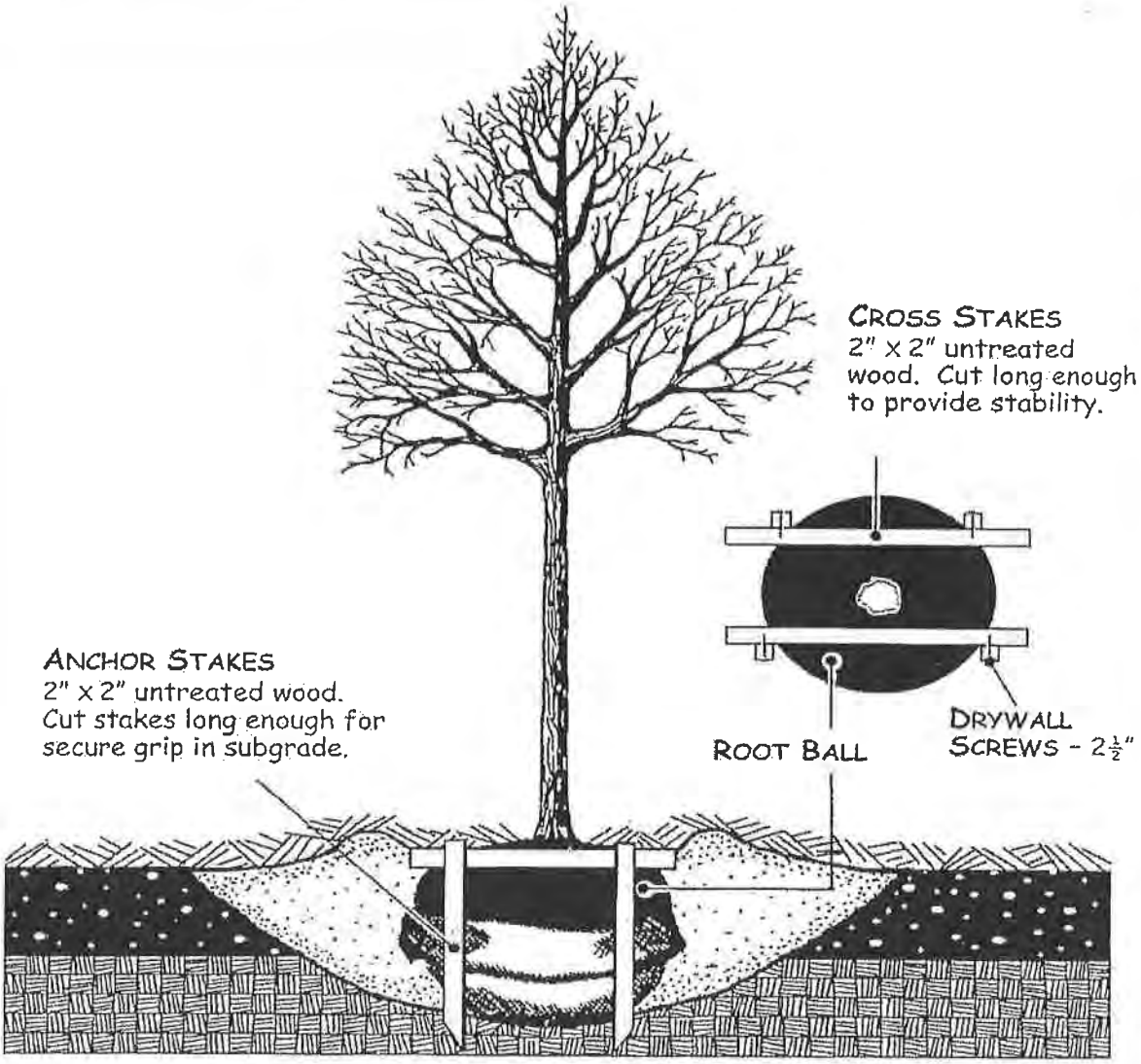

Use anchoring systems only where wind or soil conditions make it necessary. Remove after one year.

Detail 416 – 6
Community Development Agency

TREE PLANTING IN PARKING LOTS

May, 2001
Effective Date

Typical Section

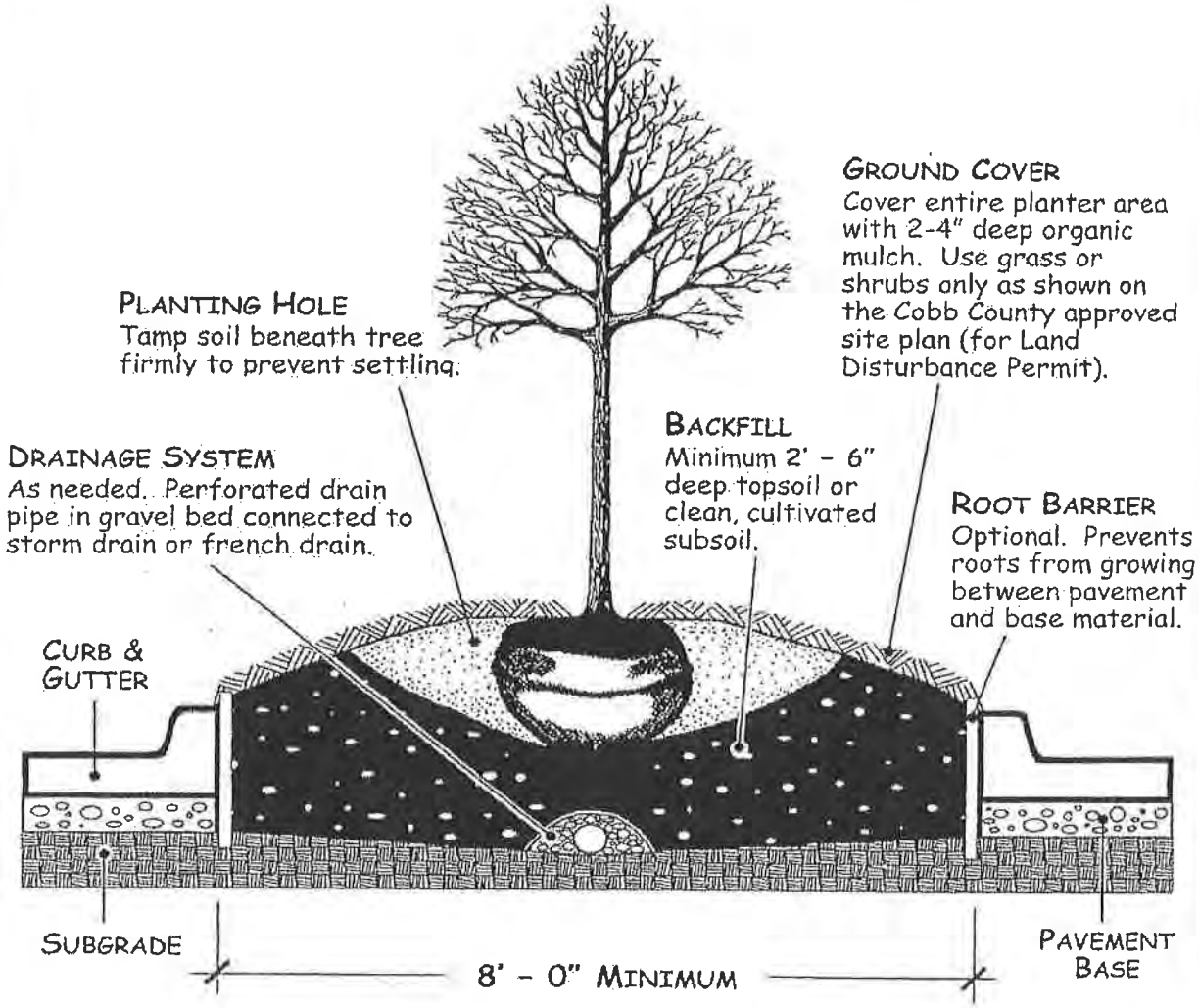

Detail 416 – 7
Community Development Agency

TREE PROTECTION FENCE

May, 2001
Effective Date

Typical Section

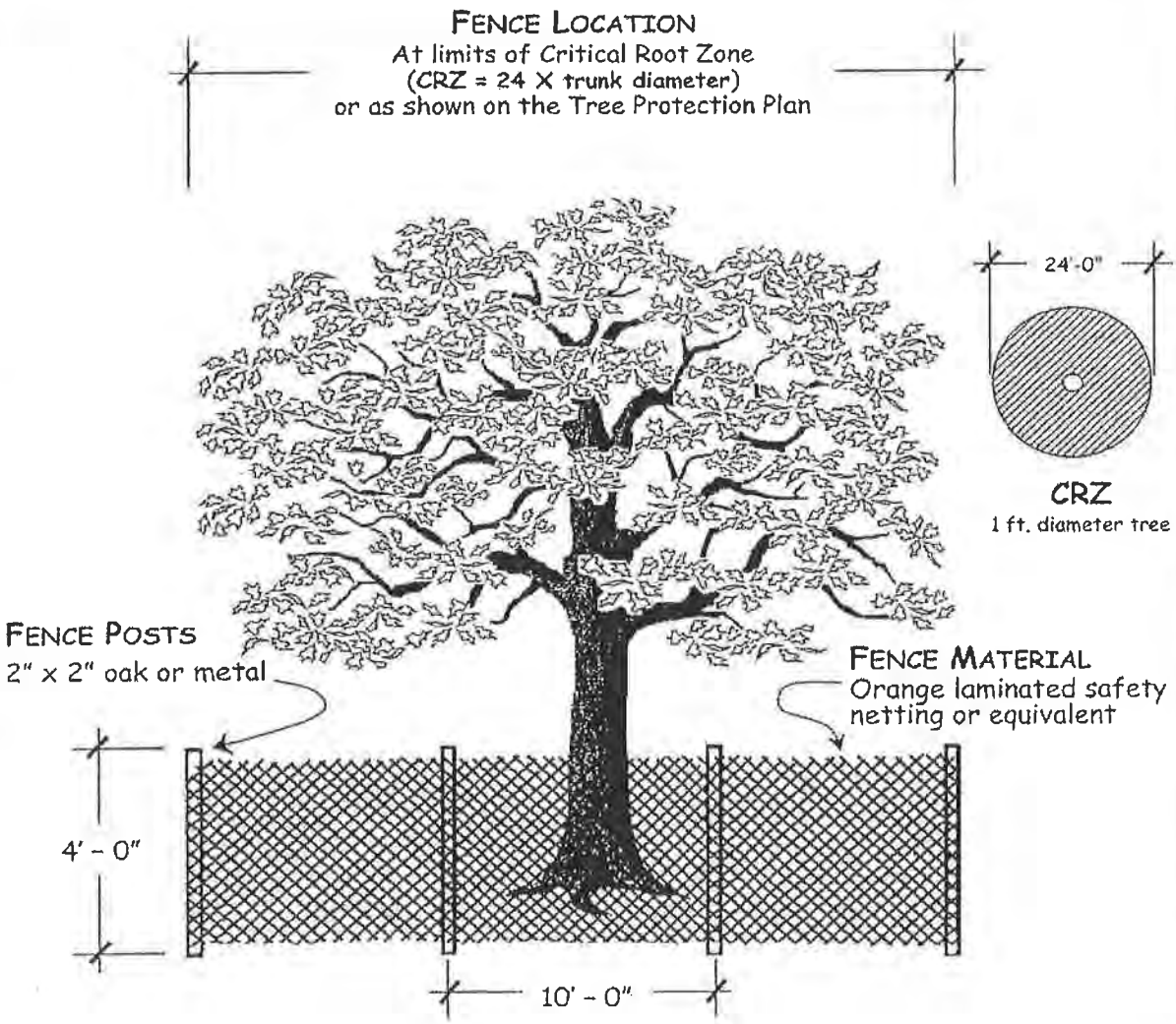

FOR ADDED PROTECTION

- Provide 4" deep wood chip mulch over any unprotected root zone.
- Make clean cuts on roots exposed by grading and backfill immediately.
- Provide temporary irrigation where practical and feasible.

V-1860 COVER

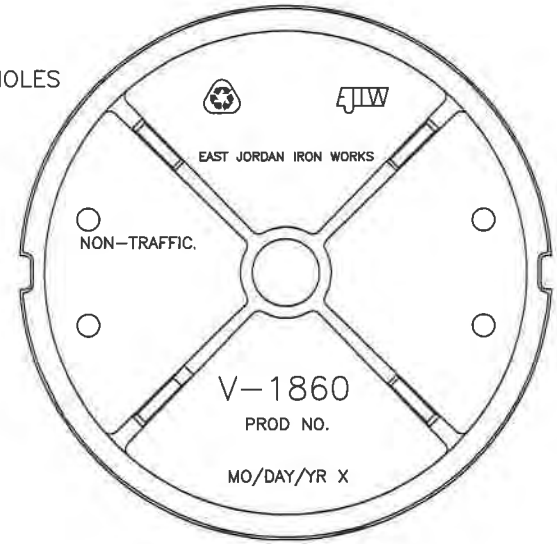

BOTTOM VIEW

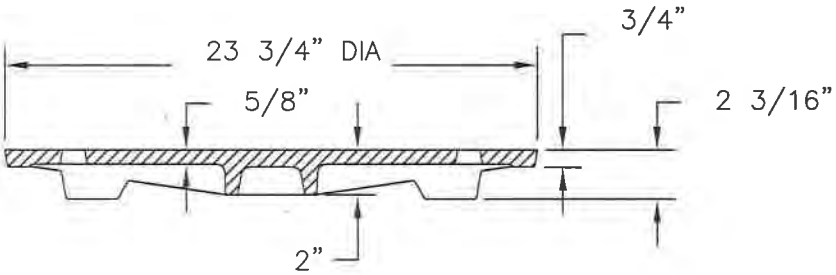

COVER SECTION

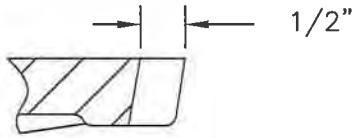

OPEN PICKHOLE DETAIL

PRODUCT NUMBER

41860040

DESIGN FEATURES

MATERIALS
COVER-GRAY IRON
ASTM A48 CL35B

DESIGN LOAD
HEAVY DUTY

COATING
UNDIPPED

OPEN AREA
N/A

√ **DESIGNATES MACHINED SURFACE**

Corporate
Headquarters
301 Spring Street
PO Box 439
East Jordan, MI
49727-0439
800.874.4100

EJ GROUP

Call Today for More Information

800.626.4653 EJIW EAST JORDAN IRON WORKS EST 1883 WE COVER YOUR INFRASTRUCTURE www.ejiw.com MADE IN THE USA

- Weights (lbs./kg.) dimensions (inches/mm, and drawings provided for your guidance.
- We reserve the right to modify specifications without prior notice
- Uncontrolled distribution

CONFIDENTIAL: This drawing is the property of East Jordan Iron works, Inc., and embodies confidential information, registered marks, trade secret information, and/or know how that is the property of East Jordan Iron Works, Inc. ©Copyright 2009 East Jordan Iron Works, Inc.

DRAWING DETAILS

ORIGINAL DRAWING:	DEW 02/08/06
REVISED BY:	DEF 02/05/10

DETAIL 02235-1
COBB COUNTY WATER SYSTEM
STEEL CASING

AUGUST 8, 2001

AGENCY DIRECTOR

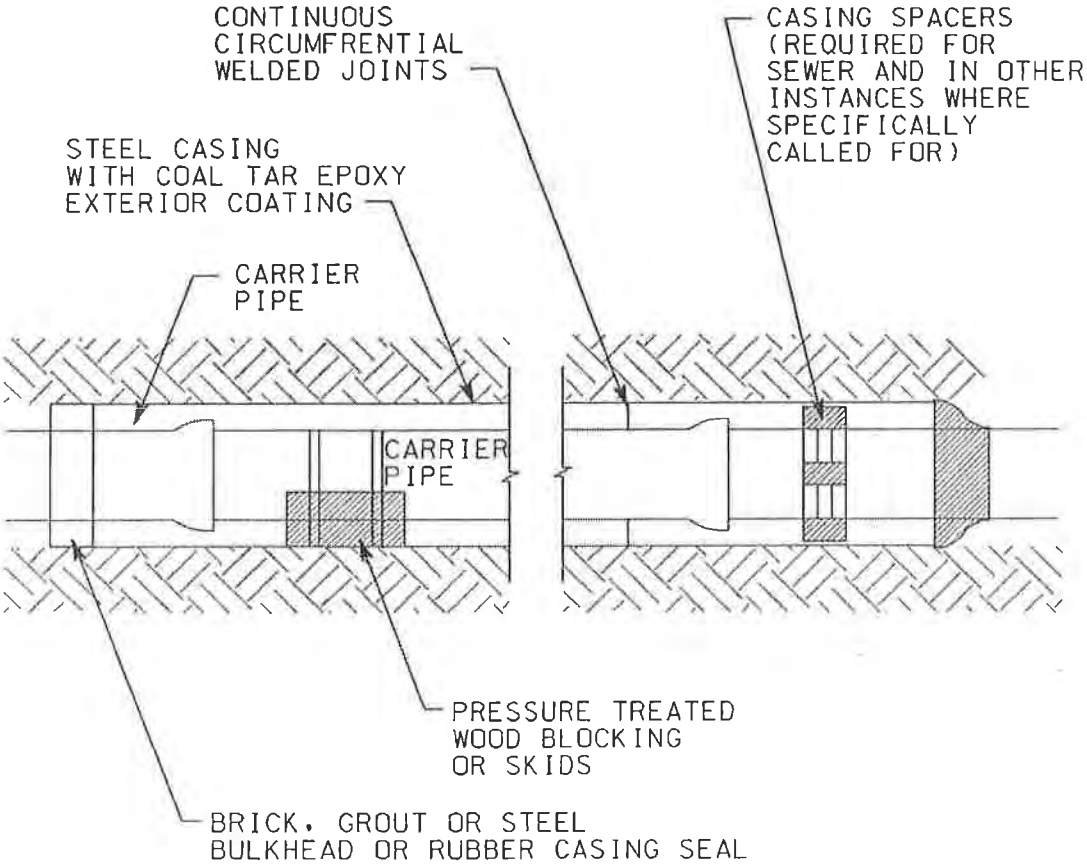

DETAIL 02270-1
COBB COUNTY WATER SYSTEM
Sd1 SEDIMENT BARRIER (SILT FENCE)

APRIL 4, 2002

AGENCY DIRECTOR

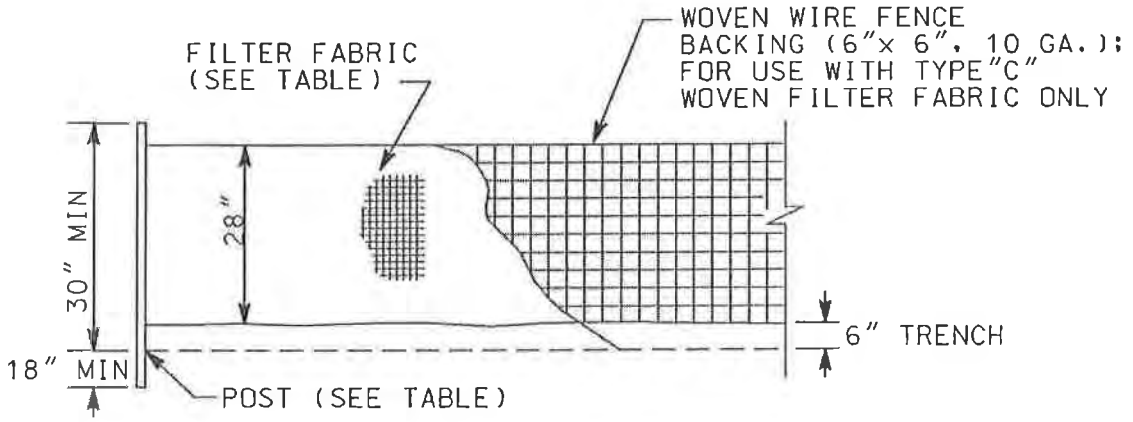

FRONT VIEW

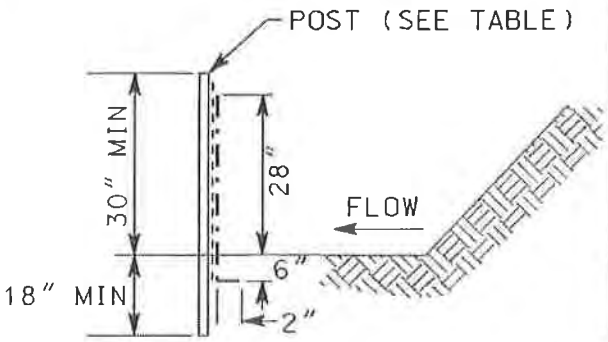

SIDE VIEW

FILTER FABRIC TYPE	POST TYPE
A NON-WOVEN	3" DIA. OR 2x4 (SOFT WOOD) OR: 1.5"x1.5"(OAK) OR: 1.3 LB/FT (STEEL) 6' O.C.
C WOVEN	1.3 LB/FT (STEEL) 4' O.C. ONLY

NOTE: 1. SILT FENCING TO BE TYPE "A" OR TYPE "C" AS NOTED ON EROSION CONTROL PLAN.
2. FABRIC (TYPE "A" OR "C") AS SPECIFIED IN GA. D.O.T. LIST #36

DETAIL 02270-2
COBB COUNTY WATER SYSTEM

(Sd1) SEDIMENT BARRIER (STAKED HAY BALE)

August 8, 2001

AGENCY DIRECTOR

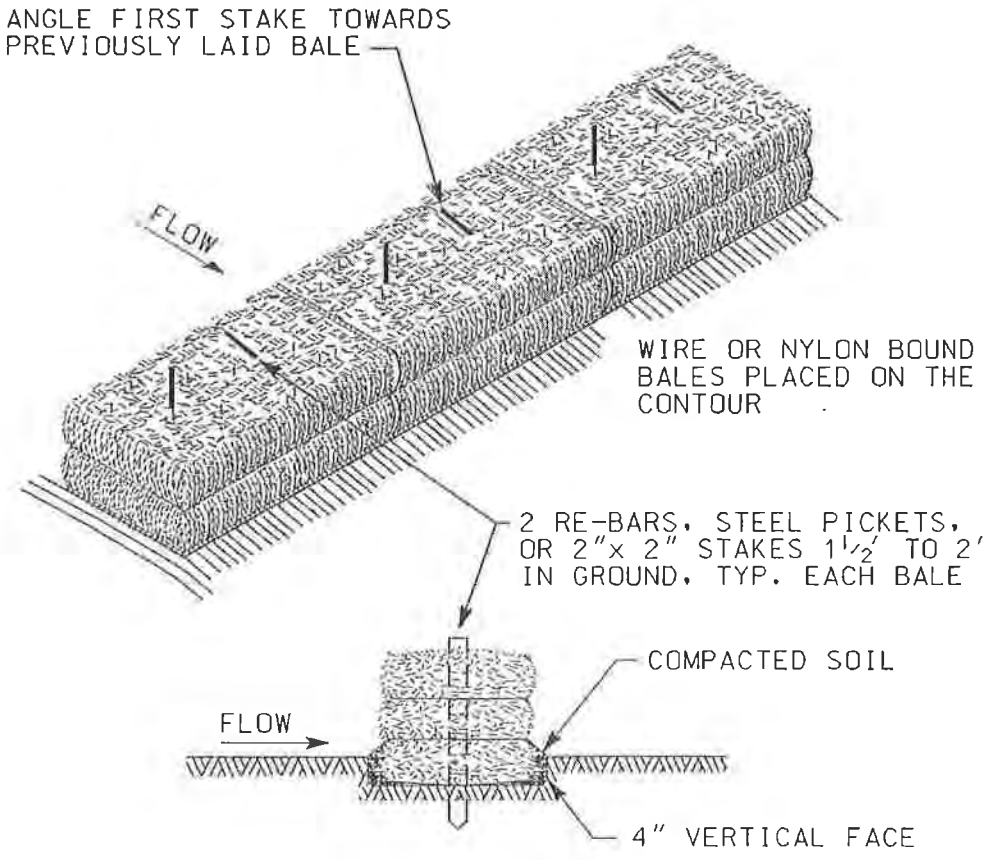

DETAIL 02270-3
COBB COUNTY WATER SYSTEM
(Sd2) INLET SEDIMENT TRAP

MAY 7, 2002

AGENCY DIRECTOR

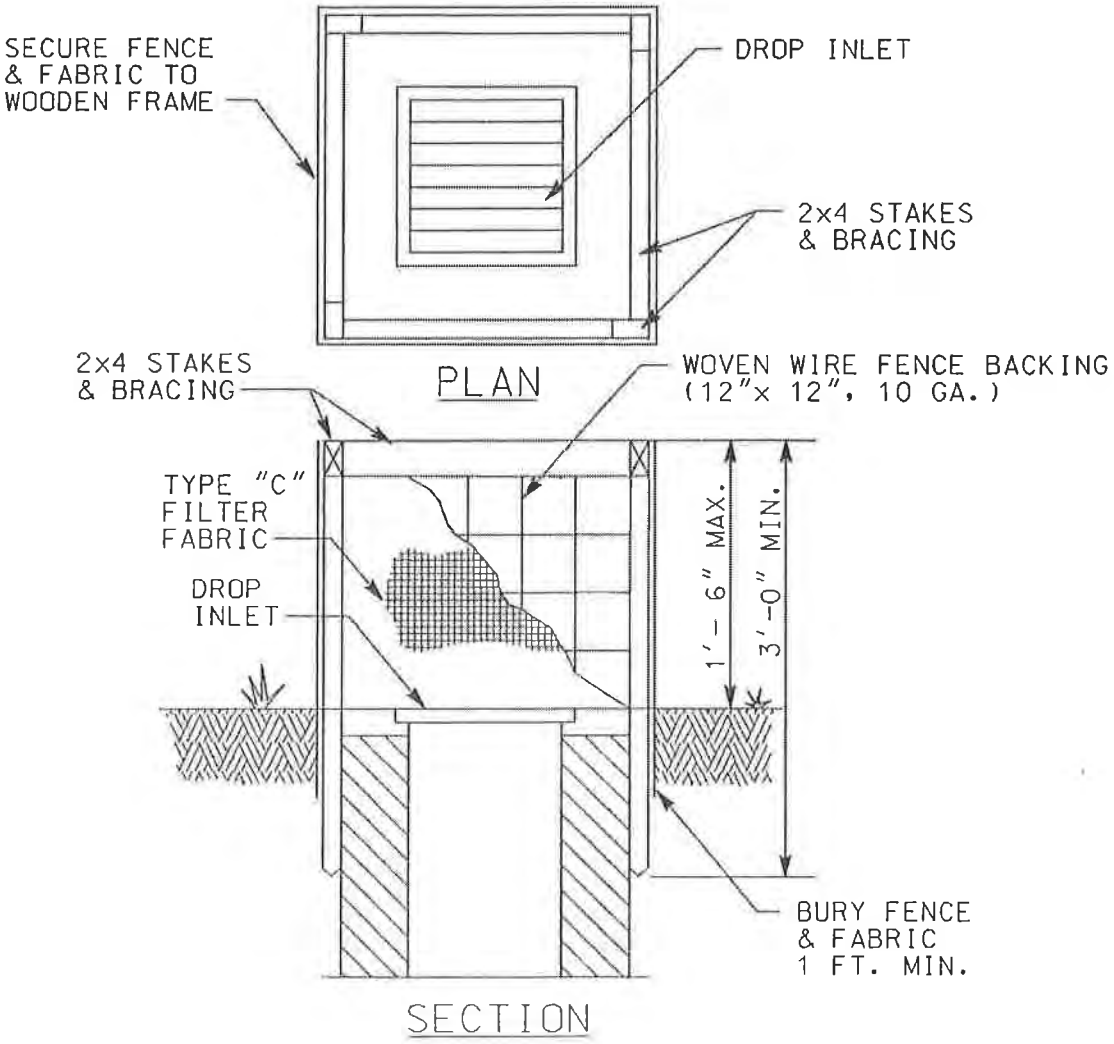

DETAIL 02270-4A
COBB COUNTY WATER SYSTEM
Sd2 CURB INLET FILTER TRAP
(CATCH BASIN - IN LINE)

October 18, 2010

AGENCY DIRECTOR

Steve McCullers

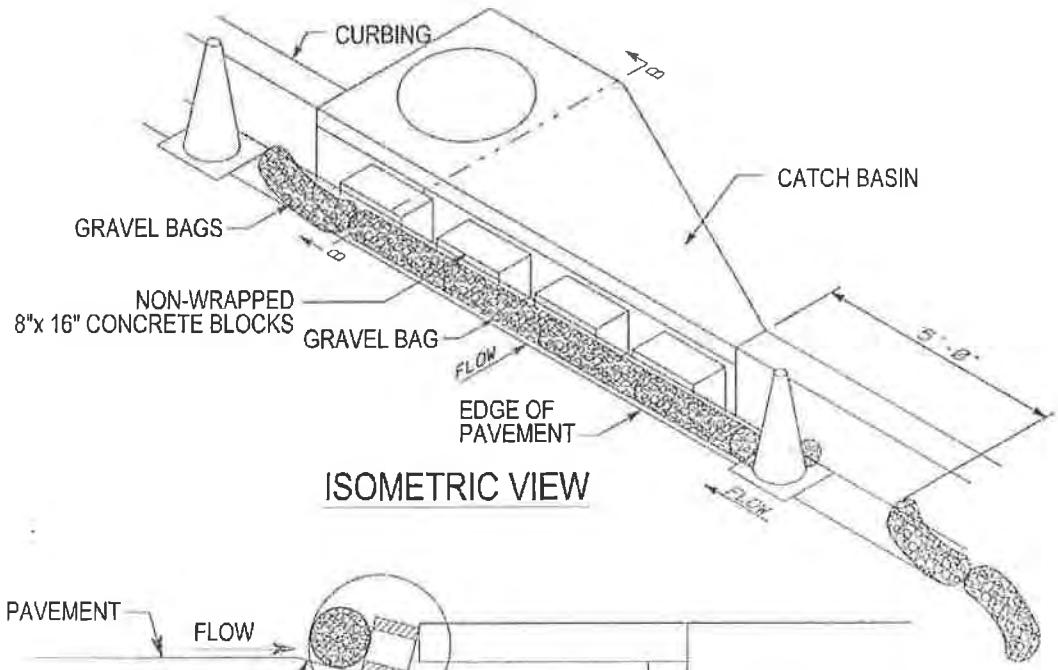

ISOMETRIC VIEW

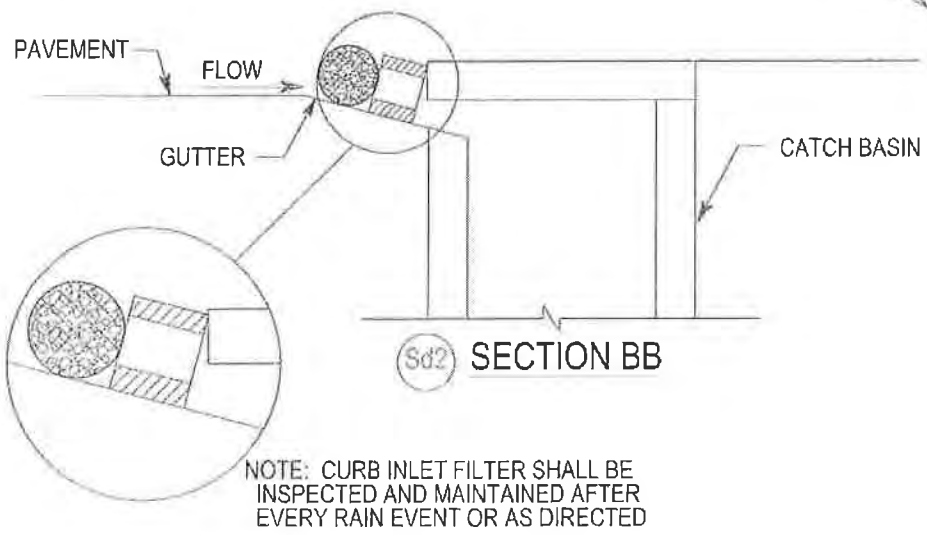

Sd2 SECTION BB

NOTE: CURB INLET FILTER SHALL BE INSPECTED AND MAINTAINED AFTER EVERY RAIN EVENT OR AS DIRECTED

DETAIL 02270-4B
COBB COUNTY WATER SYSTEM
Sd2 CURB INLET FILTER TRAP (CATCH BASIN - IN SAG)

October 18, 2010

AGENCY DIRECTOR

Steve McCullers

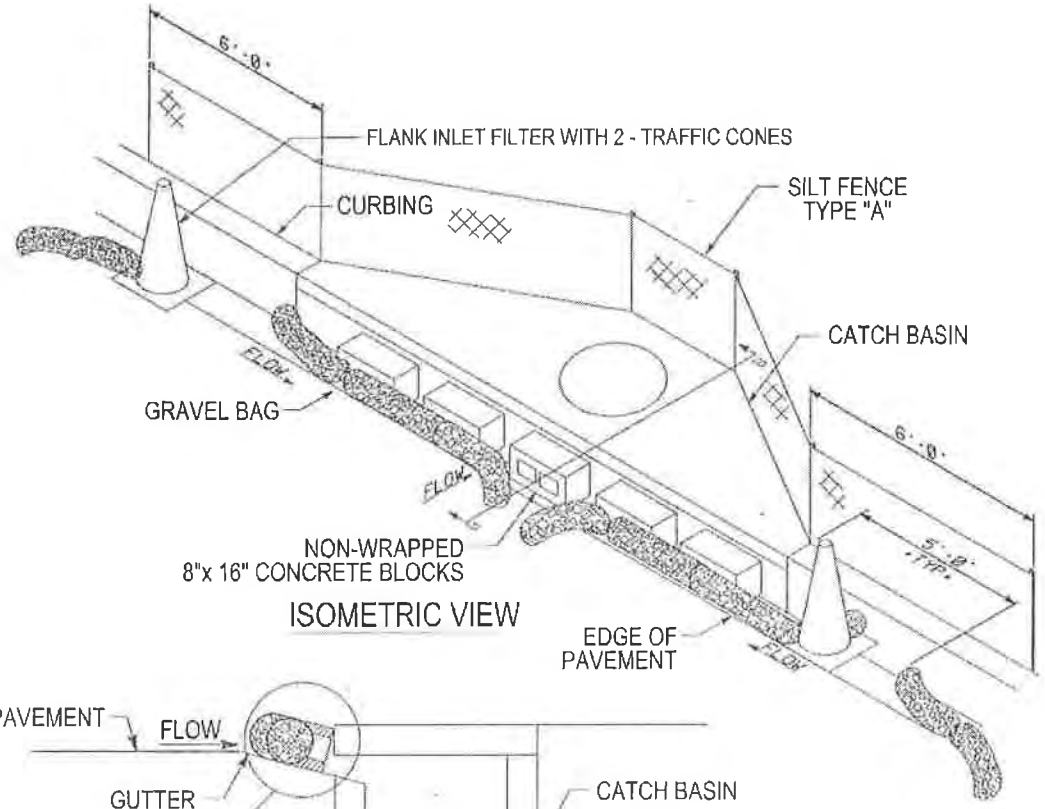

ISOMETRIC VIEW

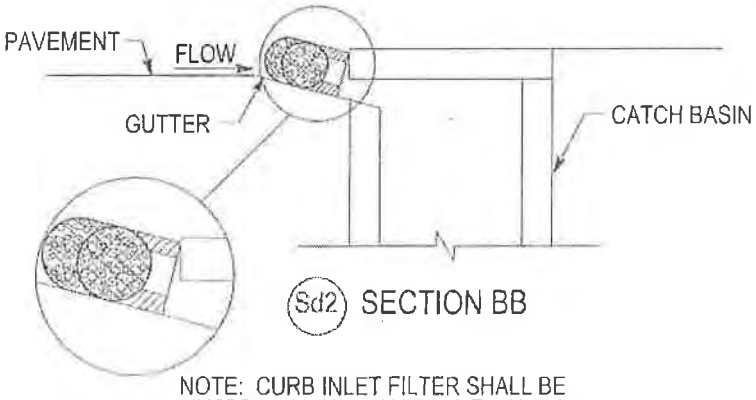

Sd2 SECTION BB

NOTE: CURB INLET FILTER SHALL BE INSPECTED AND MAINTAINED AFTER EVERY RAIN EVENT OR AS DIRECTED

DETAIL 02270-5
COBB COUNTY WATER SYSTEM

(Cd) CHECK DAM

August 8, 2001

AGENCY DIRECTOR

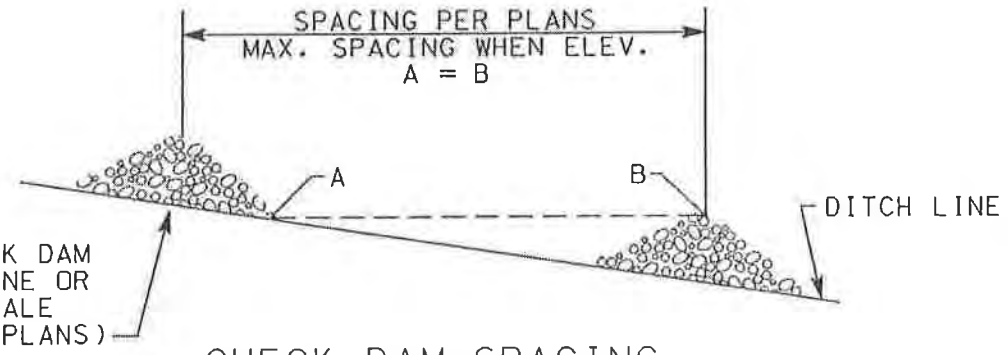

CHECK DAM SPACING

STONE CHECK DAM

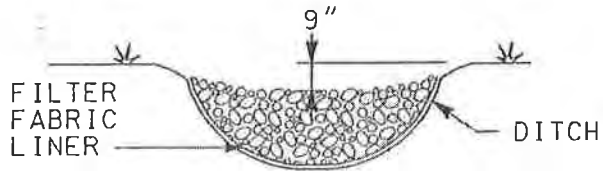

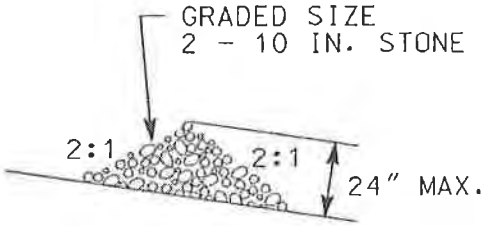

STONE

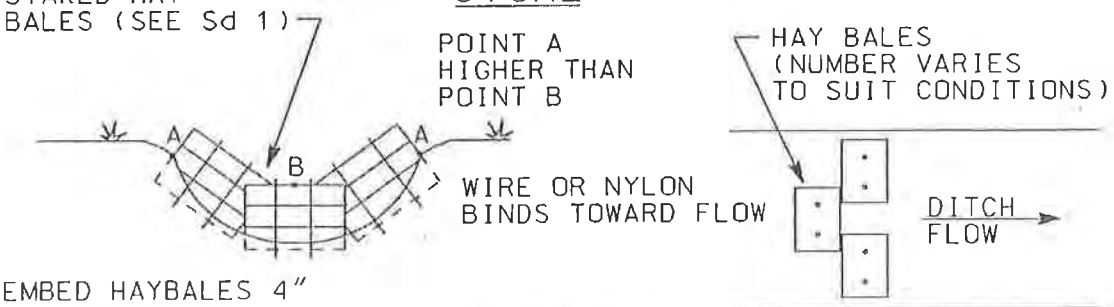

HAYBALE

DETAIL 02270-6 (A)
COBB COUNTY WATER SYSTEM
CHANNEL STABILIZATION
(GABION)

Ga

JANUARY 30, 2003

AGENCY DIRECTOR

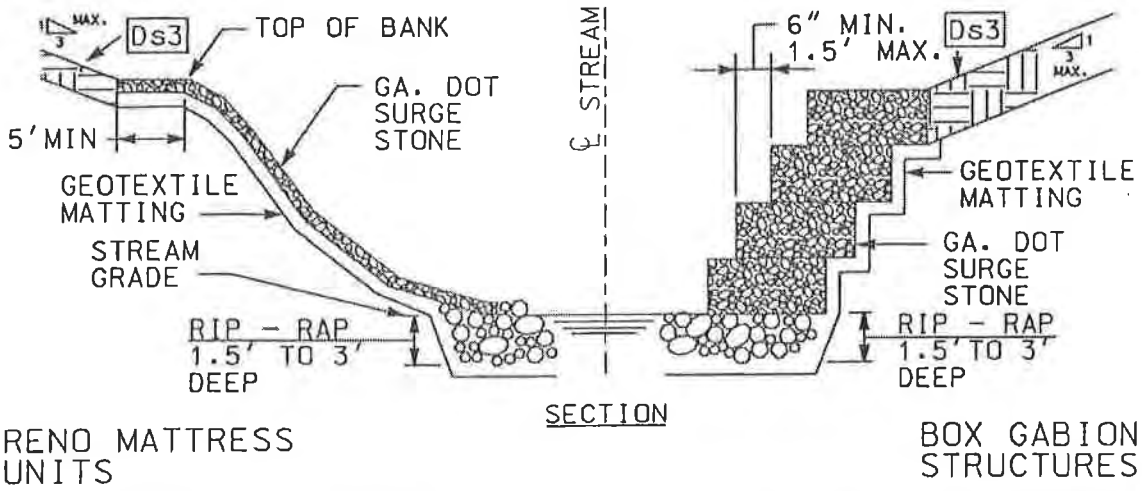

NOTES:

1. CLEARING AND EXCAVATION OF STREAM BED AND BANKS SHALL BE KEPT TO A MINIMUM. ALL DISTURBED AREAS SHALL BE STABILIZED.
2. THE WIRE MESH OR WELDED WIRE FORMING RENO MATTRESS OR BOX GABION SHALL BE MACAFERRI OR EQUAL, WITH A GREY PVC (POLYVINYL CHLORIDE) COATING.
3. GEOTEXTILE MATTING SHALL BE TREVIRA SPUNBOUND 1125 FILTER FABRIC OR EQUAL.
4. THE LOWER LIMITS OF THE RENO MATTRESS OR BOX GABION SHALL BE FIELD STAKED, AND APPROVED BY COBB COUNTY WATER SYSTEM ENGINEER.
5. SIZE OF RIP - RAP USED AS FOUNDATION FOR RENO MATTRESS AND BOX GABIONS SHALL BE DETERMINED BY COBB COUNTY WATER SYSTEM ENGINEER.

DETAIL 02270-6(B)
COBB COUNTY WATER SYSTEM

(Ch) CHANNEL STABILIZATION
(RIP-RAP)

JANUARY 30, 2003

AGENCY DIRECTOR

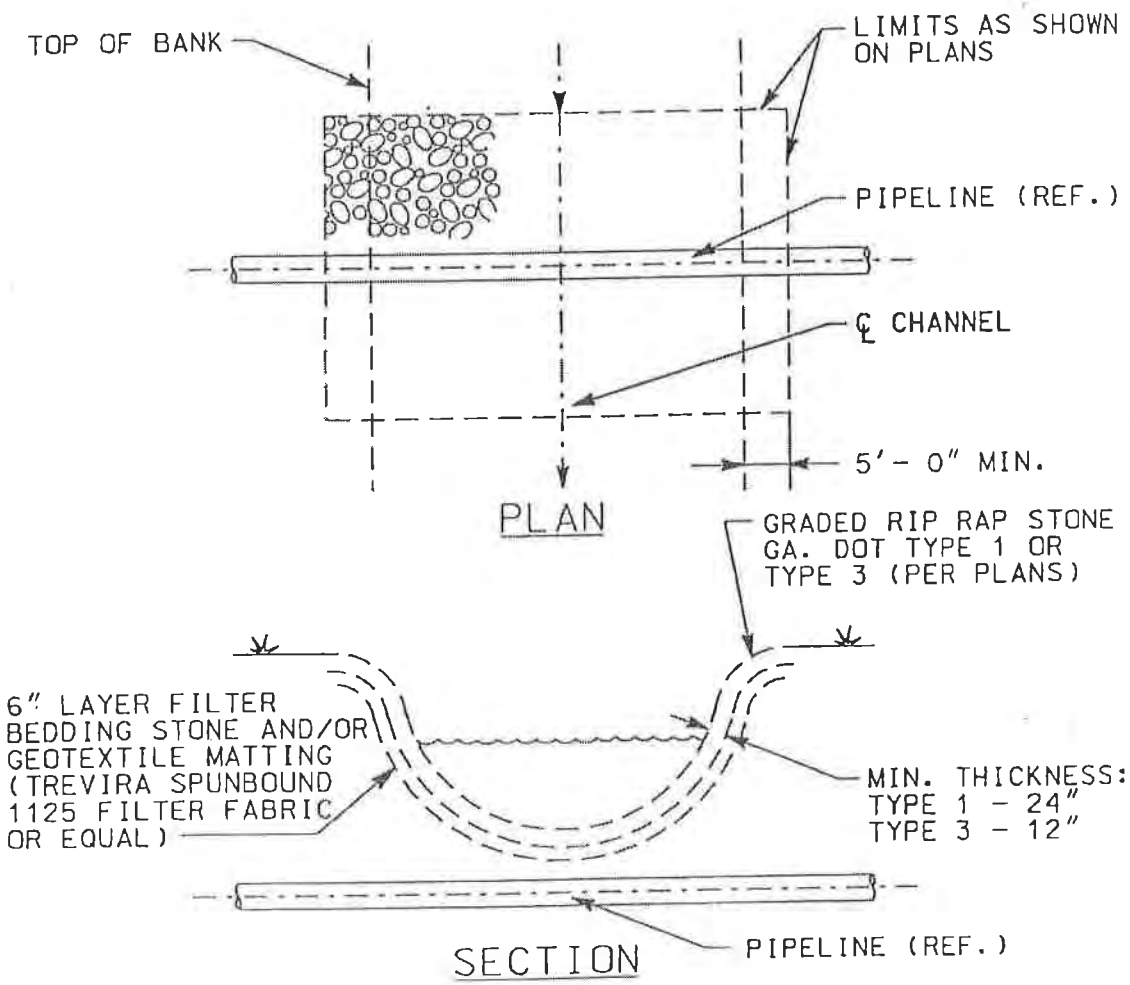

DETAIL 02270-10(A)
COBB COUNTY WATER SYSTEM
(Sr) TEMPORARY STREAM CROSSING

MAY 28, 2001

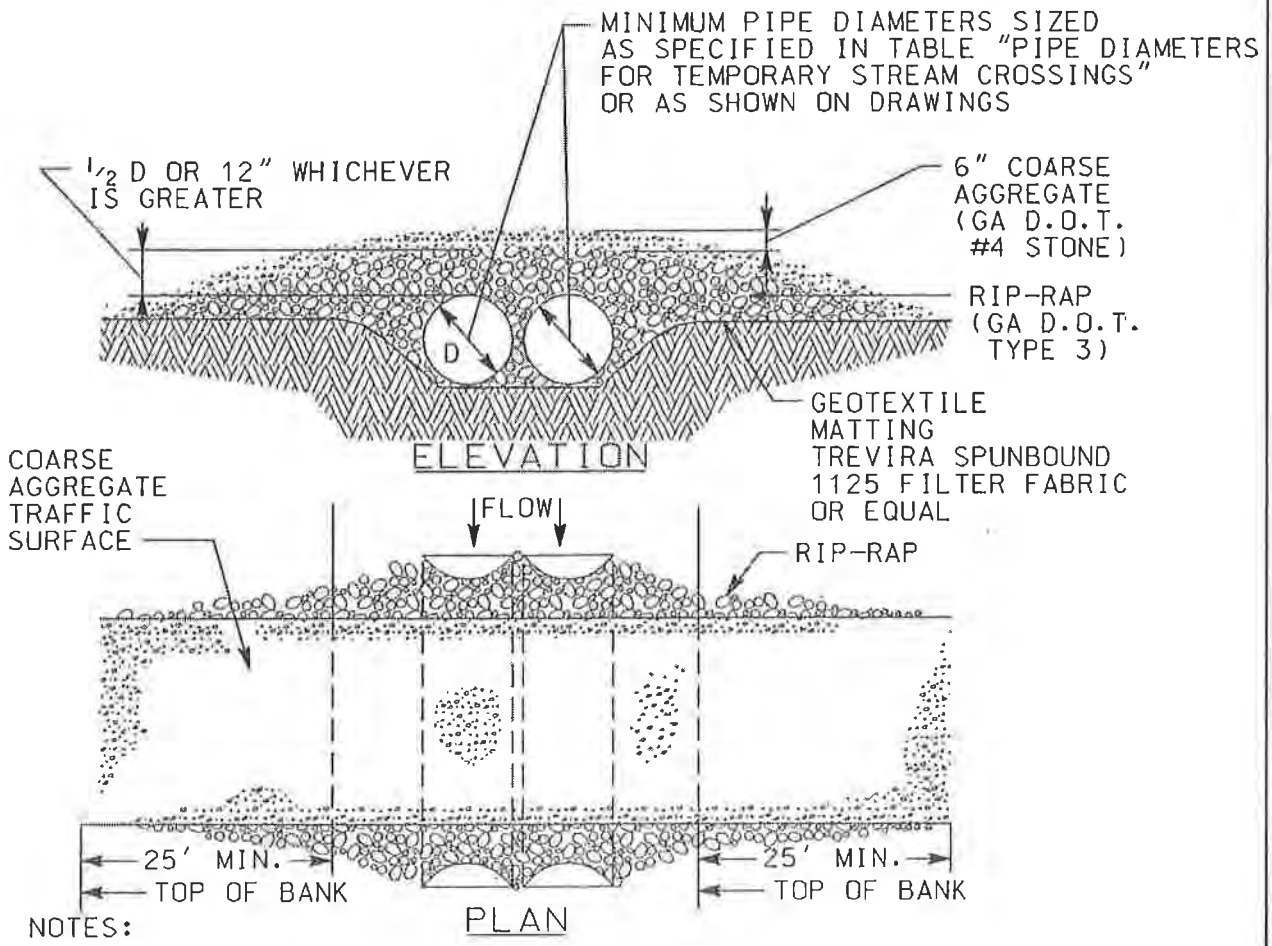

NOTES:

1. CLEARING AND EXCAVATION OF STREAM BED AND BANKS SHALL BE KEPT TO A MINIMUM.
2. REMOVE STRUCTURE AS SOON AS IT IS NO LONGER NEEDED FOR CONSTRUCTION OF PIPE AND ENCASEMENT
3. RESHAPE STREAM TO ORIGINAL CROSS SECTION AND STABILIZE AS SHOWN ON CHANNEL STABILIZATION DETAIL.

DETAIL 02270-10(B)
COBB COUNTY WATER SYSTEM
TEMPORARY STREAM CROSSING

MAY 15, 2002

AGENCY DIRECTOR

CORRUGATED METAL PIPE (CMP) DIAMETERS FOR TEMPORARY STREAM CROSSINGS

Drainage Area	Average Slope of Watershed			
(Acres)	1%	4%	8%	16%
1-25	24	24	30	30
26-50	24	30	36	36
51-100	30	36	42	48
101-150	30	42	48	48
151-200	36	42	48	54
201-250	36	48	54	54
251-300	36	48	54	60
301-350	42	48	60	60
351-400	42	54	60	60
401-450	42	54	60	72
451-500	42	54	60	72
501-550	48	60	60	72
551-600	48	60	60	72
601-640	48	60	72	72

Assumptions for determing the table: USDA-NRCS Peak Discharge Method; CN=65; Rainfall depth (average for Georgia) = 3.7" for 2-year frequency. Pipe diameters shown in the table are in inches.

DETAIL 02270-11
COBB COUNTY WATER SYSTEM

(Dv1) DIVERSION (PIPED)

August 8, 2001

AGENCY DIRECTOR

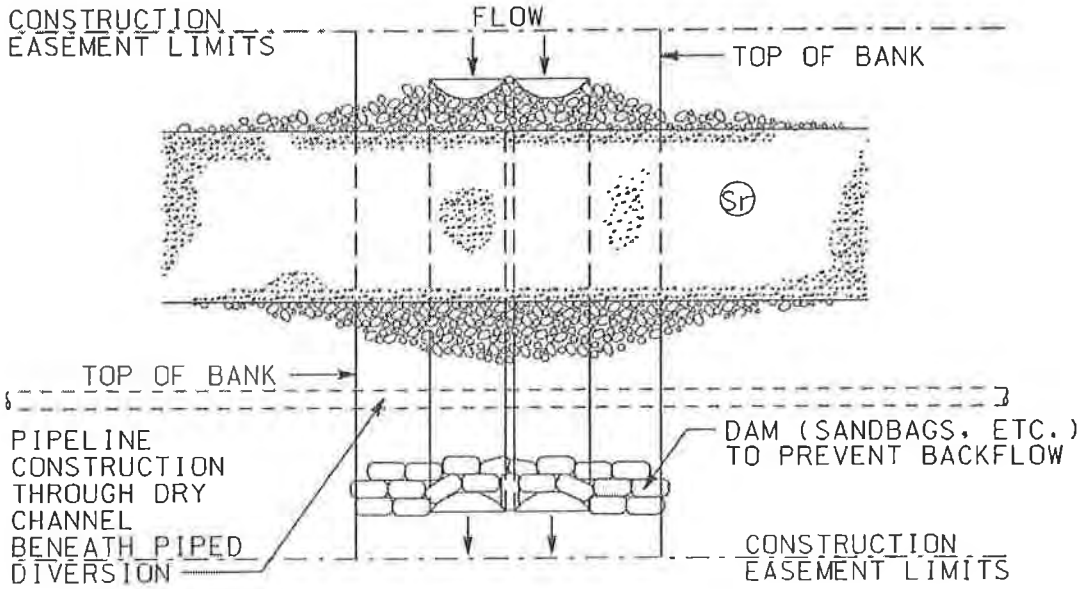

PLAN VIEW

NOTES:

1. CLEARING AND EXCAVATION OF STREAM BED AND BANKS SHALL BE KEPT TO A MINIMUM.
2. REMOVE STRUCTURE AS SOON AS IT IS NO LONGER NEEDED FOR CONSTRUCTION OF PIPE AND ENCASEMENT
3. RESHAPE STREAM TO ORIGINAL CROSS SECTION AND STABILIZE AS SHOWN ON CHANNEL STABILIZATION DETAIL.

DETAIL 02270-12
COBB COUNTY WATER SYSTEM

(Dv2) DIVERSION (PUMPED)

August 8, 2001

AGENCY DIRECTOR

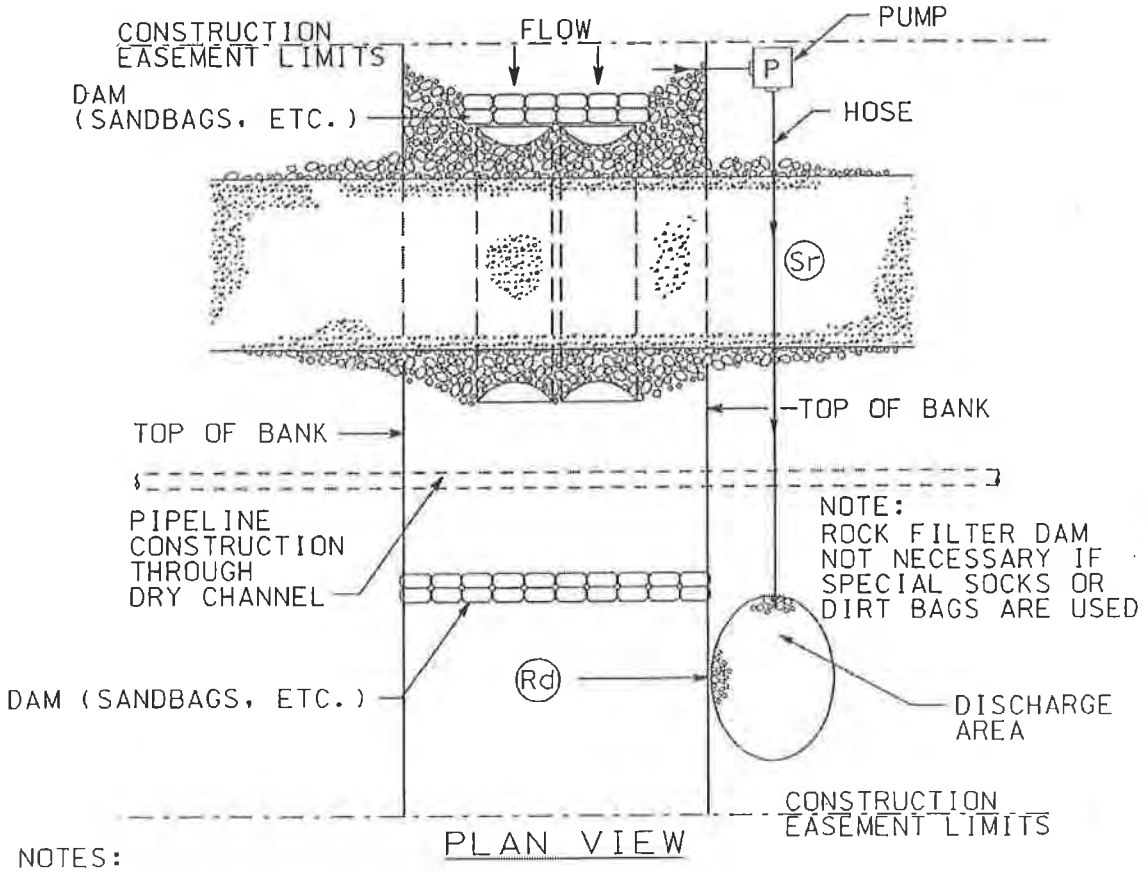

PLAN VIEW

NOTES:

1. CLEARING AND EXCAVATION OF STREAM BED AND BANKS SHALL BE KEPT TO A MINIMUM.
2. REMOVE STRUCTURE AS SOON AS IT IS NO LONGER NEEDED FOR CONSTRUCTION OF PIPE AND ENCASEMENT
3. RESHAPE STREAM TO ORIGINAL CROSS SECTION AND STABILIZE AS SHOWN ON CHANNEL STABILIZATION DETAIL.

DETAIL 02270-13(A)
COBB COUNTY WATER SYSTEM
ENGINEERED DIVERSION STRUCTURE
(SEQUENCE ONE)

Dv3

August 8, 2001

ASSISTANT DIRECTOR

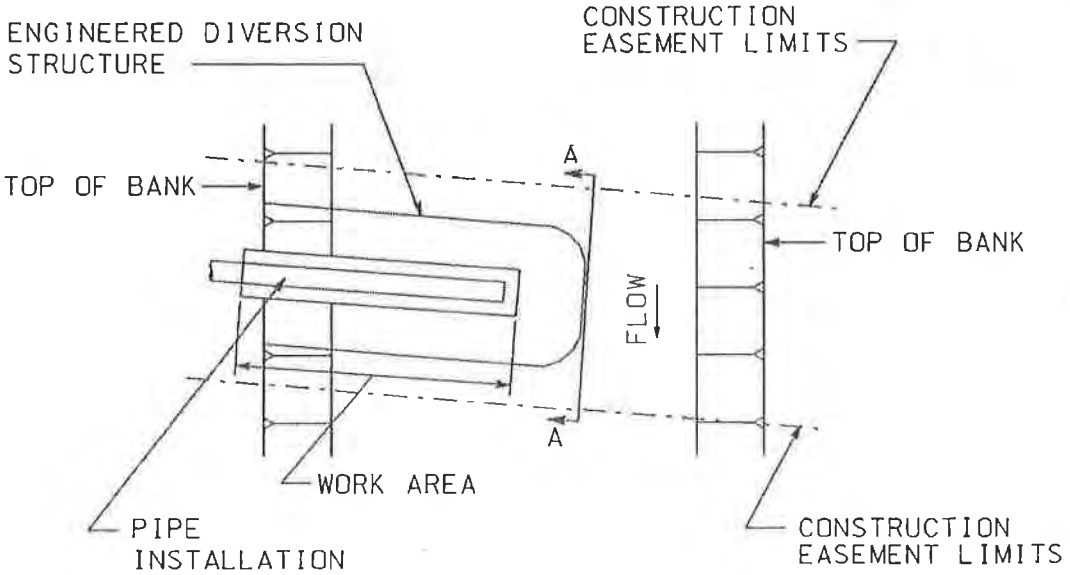

DETAIL 02270-13(B)
COBB COUNTY WATER SYSTEM
ENGINEERED DIVERSION STRUCTURE
(SEQUENCE TWO)

Dv3

August 8, 2001

AGENCY DIRECTOR

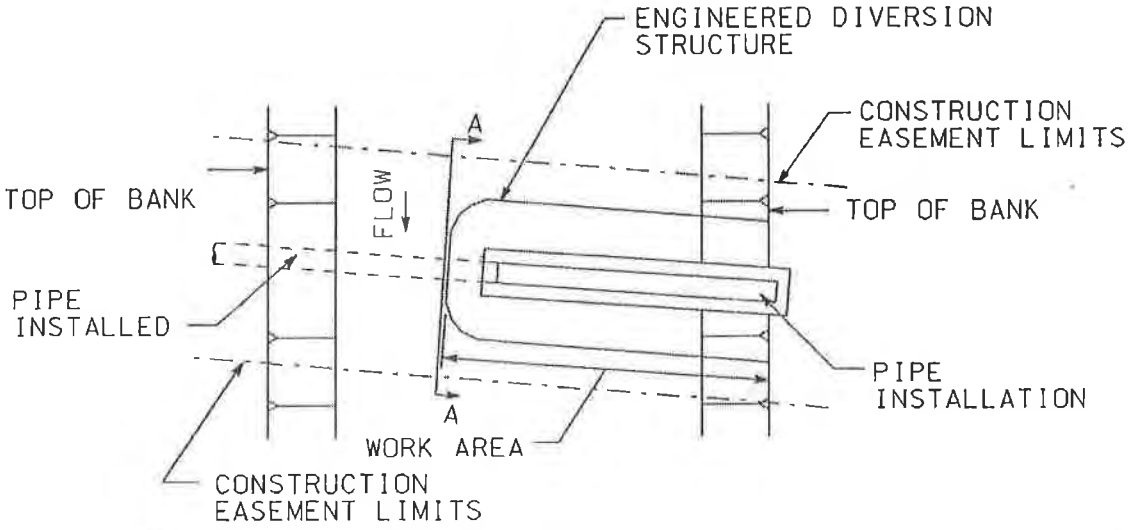

DETAIL 02270-13(C)
COBB COUNTY WATER SYSTEM
ENGINEERED DIVERSION STRUCTURE
(SECTION AA)

Dv3

August 8, 2001

ASSISTANT DIRECTOR

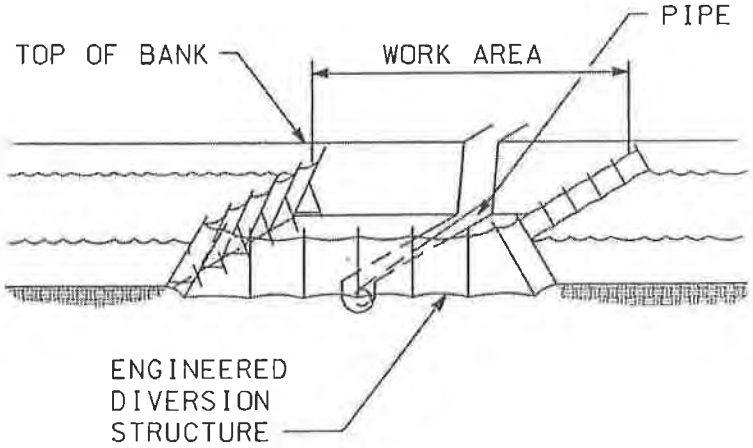

NOTES:

1. CLEARING AND EXCAVATION OF STREAM BED AND BANKS SHALL BE KEPT TO A MINIMUM.
2. REMOVE STRUCTURE AS SOON AS IT IS NO LONGER NEEDED FOR CONSTRUCTION OF PIPE AND ENCASEMENT
3. RESHAPE STREAM TO ORIGINAL CROSS SECTION AND STABILIZE AS SHOWN ON CHANNEL STABILIZATION DETAIL.

DETAIL 02270-15
COBB COUNTY WATER SYSTEM

(Rd) ROCK FILTER DAM

August 8, 2001

DIRECTOR

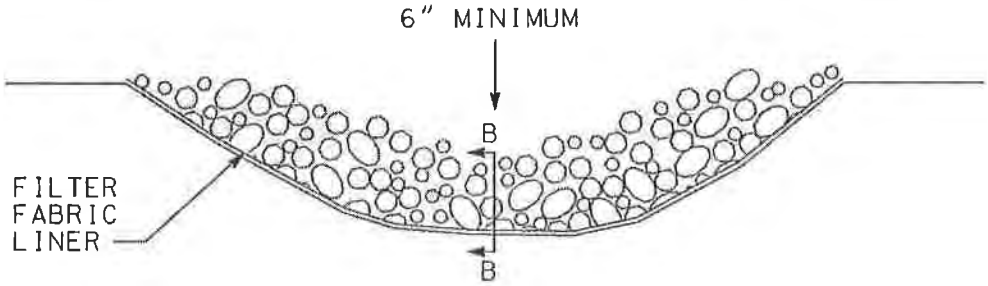

ELEVATION

NOTE: SEDIMENT TO BE CLEANED OUT
WHEN VOLUME BECOMES HALF FULL

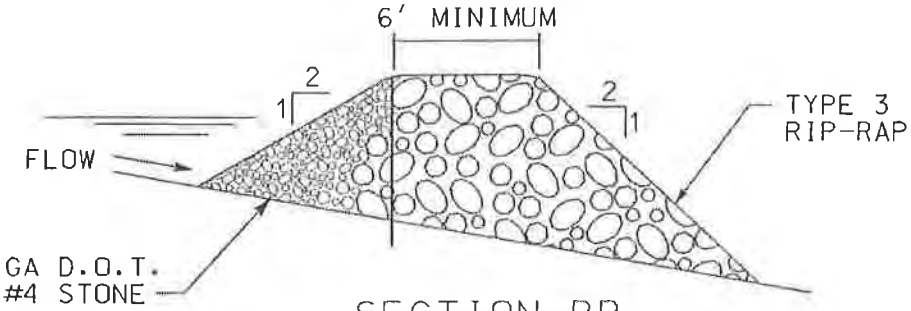

SECTION BB

NOTE:
THIS STRUCTURE SHALL NOT BE INSTALLED IN A LIVE STREAM.

(Rd) ROCK FILTER DAM
DETAIL 02270-15

DETAIL 02270-16
COBB COUNTY WATER SYSTEM
(Co) CONSTRUCTION EXIT

August 8, 2001

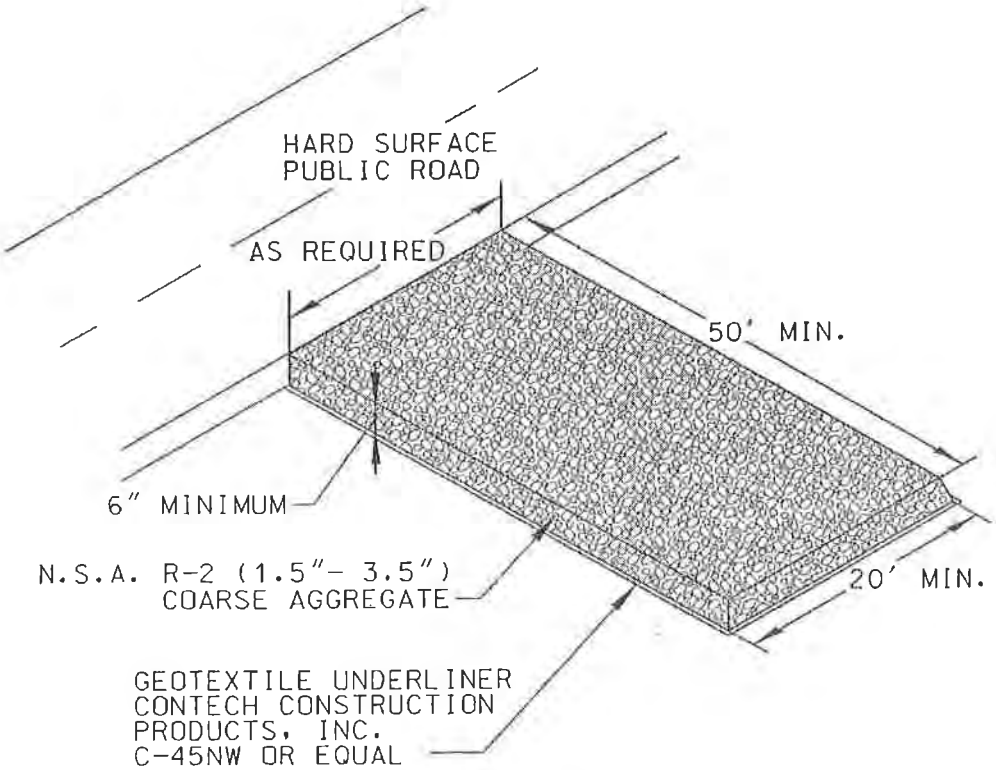

DETAIL 02270-20(A)
COBB COUNTY WATER SYSTEM
DISTURBED AREA STABILIZATION
Ds1 (WITH MULCHING)

August 8, 2001

AGENCY DIRECTOR

ESTABLISHING A TEMPORARY PROTECTION FOR DISTURBED AREAS USING SPECIFIC MULCH MATERIALS.

1. MULCH MATERIALS SHALL CONSIST OF DRY STRAW OR HAY AT 2.5 TONS PER ACRE, WOOD CHIPS AT 6 TO 9 TONS PER ACRE, EROSION CONTROL MATTING OR NETTING, OR POLYETHYLENE FILM.
2. THIS STANDARD APPLIED TO GRADES OR CLEARED AREAS WHICH MAY BE SUBJECTED TO EROSION CONTROL FOR 6 MONTHS OR LESS, AND CAN BE STABILIZED WITH A MULCH COVER.

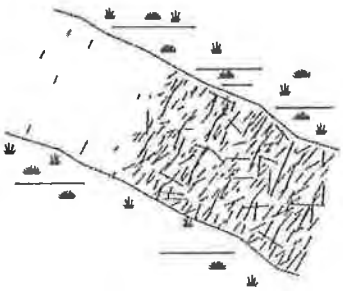

DETAIL 02270-20(B)
COBB COUNTY WATER SYSTEM
DISTURBED AREA STABILIZATION
Ds2 (WITH TEMPORARY SEEDING)

August 8, 2001

ACTING DIRECTOR

ESTABLISHING A TEMPORARY VEGETATIVE COVER WITH FAST GROWING SEEDINGS.

1. < 12 MONTHS OR UNTIL ESTABLISHMENT OF FINISHED GRADE OR PERMANENT VEGETATION.
2. SITE PREPARATION:
   - GRADING AND SHAPING
   - SEEDBED PREPARATION
   - APPLY LIME AND FERTILIZER
   - PLANT SEEDING, SELECT SPECIES BY SEASON AND REGION
   - APPLY MULCHING MATERIAL AS NEEDED (SEE Ds1 FOR TYPES AND RATES)
   - IRRIGATE IF NEEDED BUT NOT @ RATE TO CAUSE EROSION
3. SEE DETAIL 02270-21 FOR PLANTING DATES

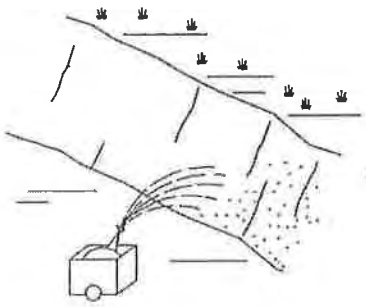

NOTE: CONTRACTOR SHALL STABILIZE ALL AREAS WITH TEMPORARY VEGETATION THAT ARE TO BE EXPOSED WITHOUT STORM WATER PROTECTION FOR LONGER THAN 7 DAYS.

DETAIL 02270-20(C)
COBB COUNTY WATER SYSTEM
DISTURBED AREA STABILIZATION
Ds3 (WITH PERMANENT VEGETATION)

August 8, 2001

DIRECTOR

ESTABLISHING A PERMANENT VEGETATIVE COVER ON A DISTURBED AREA.

1. APPLICABLE ON HIGHLY ERODIBLE OR SEVERELY ERODED AREAS, SOMETIMES CALLED "CRITICAL AREAS" INCLUDING:
   - CHANNEL BANKS - ROADSIDES
   - SPOIL AREAS - BERMS
   - GULLIED LANDS
2. GRADING AND SHAPING REQ'D. WHERE FEASIBLE AND PRACTICAL.
3. FESCUE ON SLOPES STEEPER THAN 3 TO 1 SHALL BE HYDROSEEDED OR REPLACED AS SOD.
4. MULCH ALL SLOPES STEEPER THAN 3% AND IN BOTTOM OF SPILLWAYS AND ON ROADBANKS (SEE Ds1 FOR TYPES AND RATES).
5. ANCHOR MULCH IMMEDIATELY.

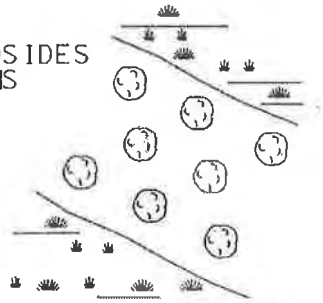

DETAIL 02270-20(D)
COBB COUNTY WATER SYSTEM
DISTURBED AREA STABILIZATION
Ds4 (SODDING)

September 26, 2005

AGENCY DIRECTOR

Steve McCullers

FERTILIZER APPLICATION TABLE

FERTILIZER TYPE	FERTILIZER RATE (LBS./SQ. FT.)	FERTILIZER RATE (LBS./ ACRE)	SEASON
10-10-10	.025	1000	FALL

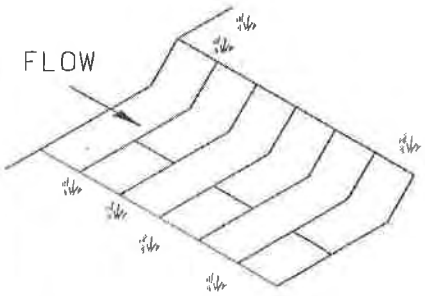

LAY SOD ACROSS THE DIRECTION OF FLOW

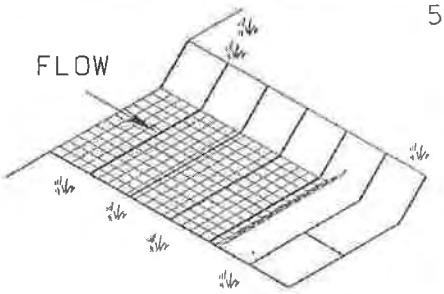

IN CRITICAL AREAS, SECURE SOD WITH NETTING. USE STAPLES.

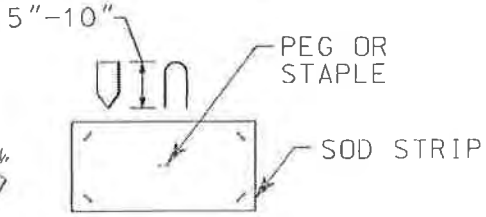

USE PEGS OR STAPLES TO FASTEN SOD FIRMLY AT THE ENDS OF STRIPS AND IN THE CENTER OR EVERY 3-4 FEET IF THE STRIPS ARE LONG. WHEN READY TO MOW, DRIVE PEGS FLUSH WITH THE GROUND.

SOIL PREPARATION:

1. BRING SOIL SURFACE TO FINAL GRADE. CLEAR SURFACE OF TRASH, WOODY DEBRIS, STONES AND CLODS LARGER THAN 1". APPLY SOD TO SOIL SURFACES ONLY AND NOT FROZEN SURFACES, OR GRAVEL TYPE SOILS. AS NECESSARY APPLY TOP SOIL. DO NOT USE TOPSOIL RECENTLY TREATED WITH HERBICIDES OR SOIL STERILANTS.

2. MIX FERTILIZER INTO SOIL SURFACE. FERTILIZE BASED ON SOIL TESTS OR FERTILIZING TABLE.

INSTALLATION:

1. LAY SOD WITH TIGHT JOINTS AND IN STRAIGHT LINES. DO NOT OVERLAP JOINTS. STAGGER JOINTS AND DO NOT STRETCH SOD.

2. ON SLOPES STEEPER THAN 3:1, SOD SHOULD BE ANCHORED WITH PINS OR OTHER APPROVED METHODS. INSTALLED SOD SHOULD BE ROLLED OR TAMPED TO PROVIDE GOOD CONTACT BETWEEN SOD AND SOIL.

3. IRRIGATE SOD AND SOIL TO A DEPTH OF 4" IMMEDIATELY AFTER INSTALLATION.

4. SOD SHOULD NOT BE CUT OR SPREAD IN EXTREMELY WET OR DRY WEATHER. IRRIGATION SHOULD BE USED TO SUPPLEMENT RAINFALL FOR A MINIMUM OF 2 -3 WEEKS.

DETAIL 02270-21
COBB COUNTY WATER SYSTEM
DISTURBED AREA STABILIZATION
APPLICATION TABLE

August 8, 2001

AGENCY DIRECTOR

APPLICATION TABLE

SEASON	KIND OF SEED	POUNDS PER ACRE
JAN.1 - MAY 15	UNHULLED COMMON BERMUDA	45
	KENTUCKY 31 FESCUE	300
	REBEL II SUPREME	150
MAY 16 - SEPT. 1	HULLED COMMON BERMUDA	75
SEPT.2 - DEC. 31	UNHULLED COMMON BERMUDA	45
	KENTUCKY 31 FESCUE	300
	REBEL II SUPREME	150

1. THE SEED SHALL BE UNIFORMLY SOWN BY APPROVED MECHANICAL POWER DRAWN DRILLS OR, IN SMALL AREAS, BY MECHANICAL HAND SEEDERS. THE SEEDS SHALL BE COVERED AND COMPACTED TO A DEPTH OF $^1/_8$ TO $^1/_2$ INCH BY MEANS OF A CULTIPACKER AND AN EMPTY TRAFFIC ROLLER OR ANOTHER ROLLER WEIGHING LESS THAN 3 TONS. BROADCAST SEEDING AND FERTILIZING SHALL NOT BE DONE WHEN THE WIND MAKES IT DIFFICULT TO GET SATISFACTORY DISTRIBUTION.
2. COMMERCIAL FERTILIZER GRADE 18 - 46 - 0 SHALL THEN BE DISTRIBUTED UNIFORMLY AT THE RATE OF 80 LBS. PER ACRE AND SHALL BE UNIFORMLY MIXED WITH THE SOIL TO A DEPTH OF AT LEAST 4 INCHES BY DISKING.

DETAIL 02270-22
COBB COUNTY WATER SYSTEM
Mb MATTING AND BLANKETS

MAY 15, 2002

AGENCY DIRECTOR

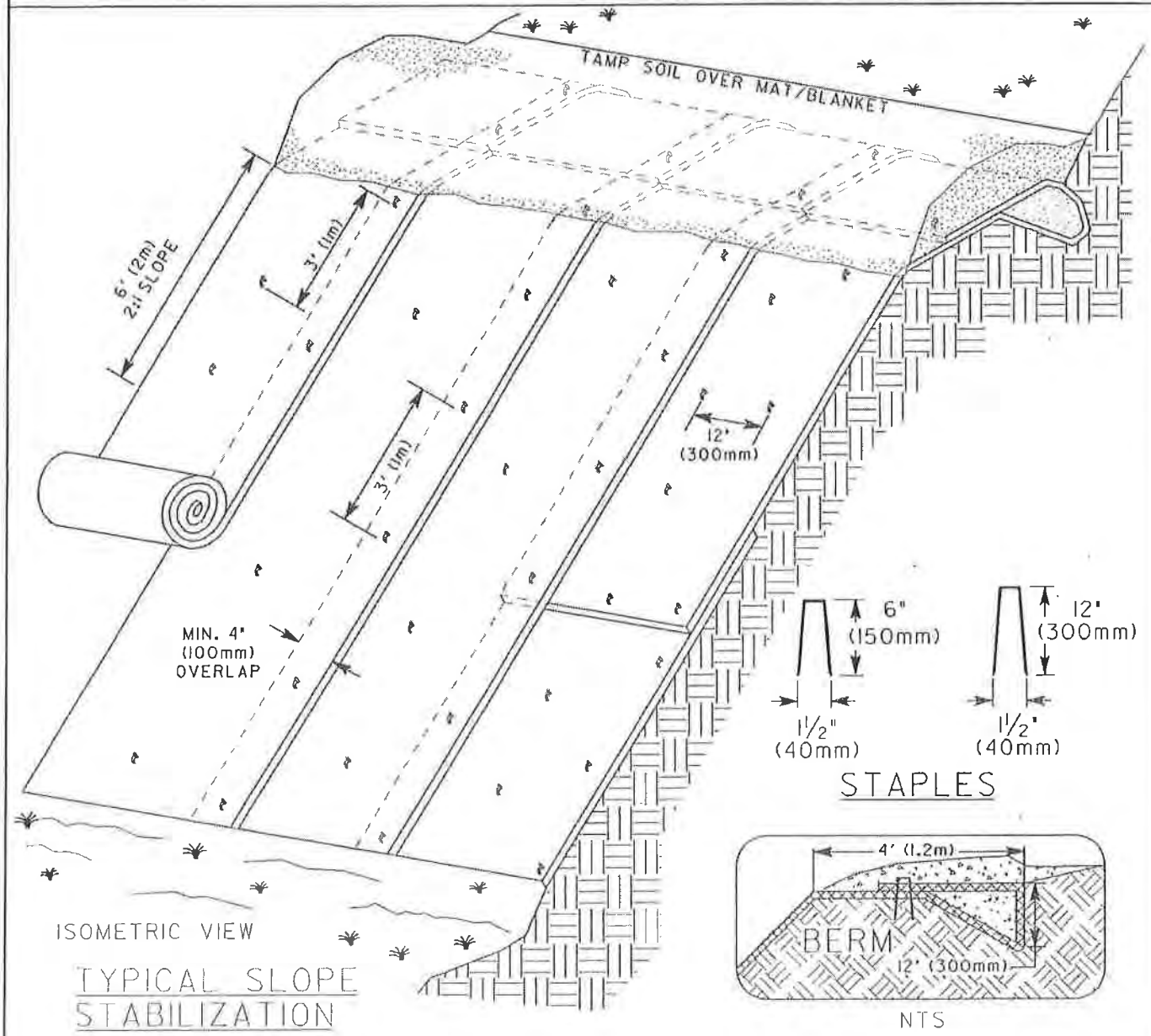

NOTES:
1. MATS/ BLANKETS SHOULD BE INSTALLED VERTICALLY DOWNSLOPE.
2. SLOPE SURFACE SHALL BE FREE OF CLODS, STICKS, AND GRASS. MATS/BLANKETS SHALL HAVE GOOD SOIL CONTACT.
3. APPLY PERMANENT SEEDING BEFORE PLACING BLANKETS.
4. LAY BLANKETS LOOSELY AND STAKE OR STAPLE TO MAINTAIN DIRECT CONTACT WITH THE SOIL. DO NOT STRETCH.

DETAIL 02510-1
COBB COUNTY WATER SYSTEM
DRIVEWAY REPLACEMENT

FEBRUARY 13, 2006

AGENCY DIRECTOR

Steve McCullers

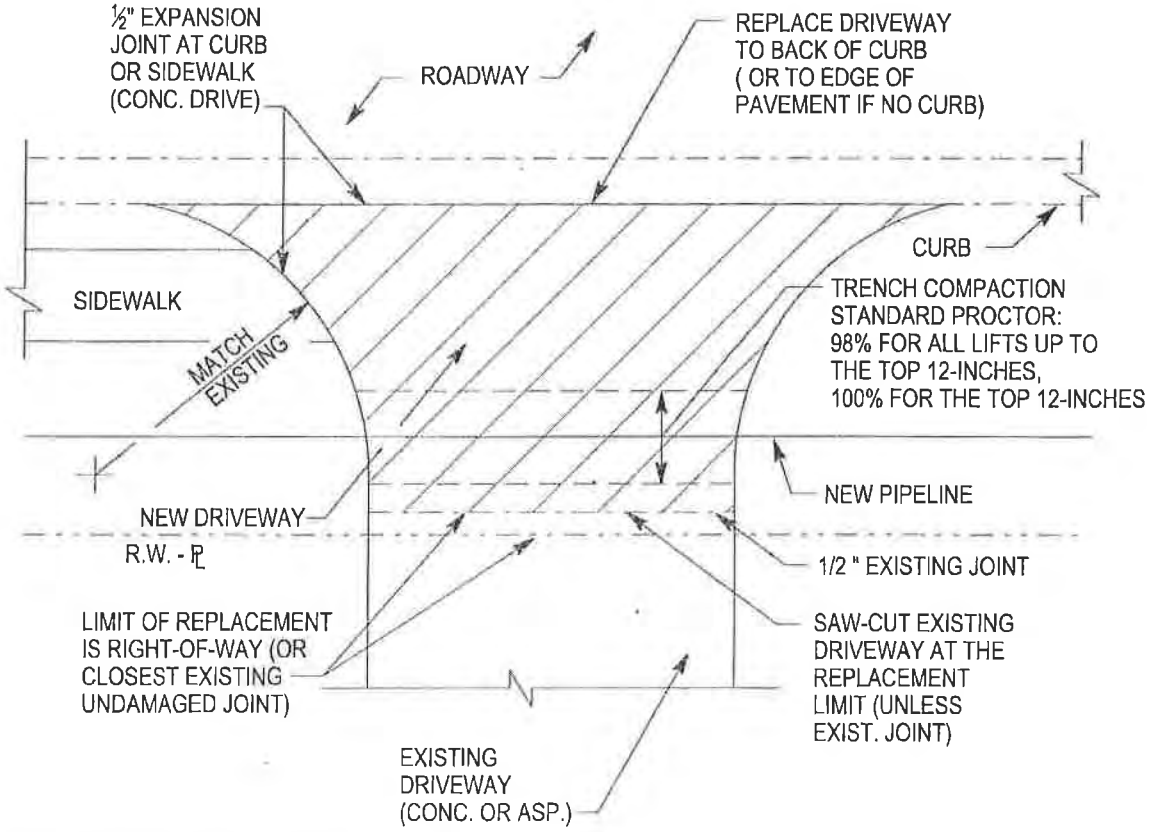

REPLACEMENT REQUIREMENTS :

CONCRETE DRIVEWAY : 6" THICK, 3000 P.S.I. CONC.; REINFORCED W/6"x 6", W2.0 x W2.0 WELDED WIRE MESH; BROOM FINISH

ASPHALT DRIVEWAY : 1 1/2" TYPE "E" OR "F" SURFACING ON 6" GRADED AGGREGATE BASE

DETAIL 02510-2
COBB COUNTY WATER SYSTEM
CONCRETE TRENCH CAP AND
ASPHALT PAVEMENT TRENCH PATCH

FEBRUARY 13, 2006

AGENCY DIRECTOR

Steve McCullers

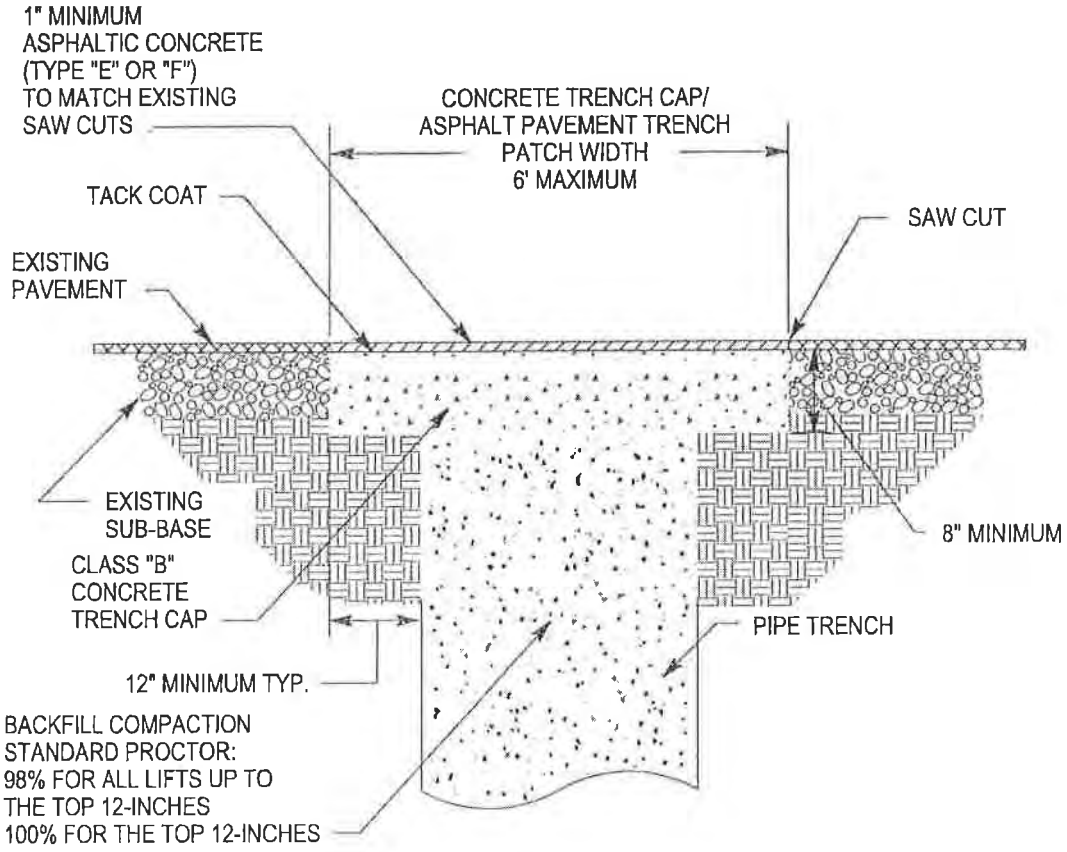

DETAIL 02510-3
COBB COUNTY WATER SYSTEM
CONCRETE TRENCH CAP AND ASPHALT OVERLAY

FEBRUARY 14, 2006

AGENCY DIRECTOR

Steve McCullers

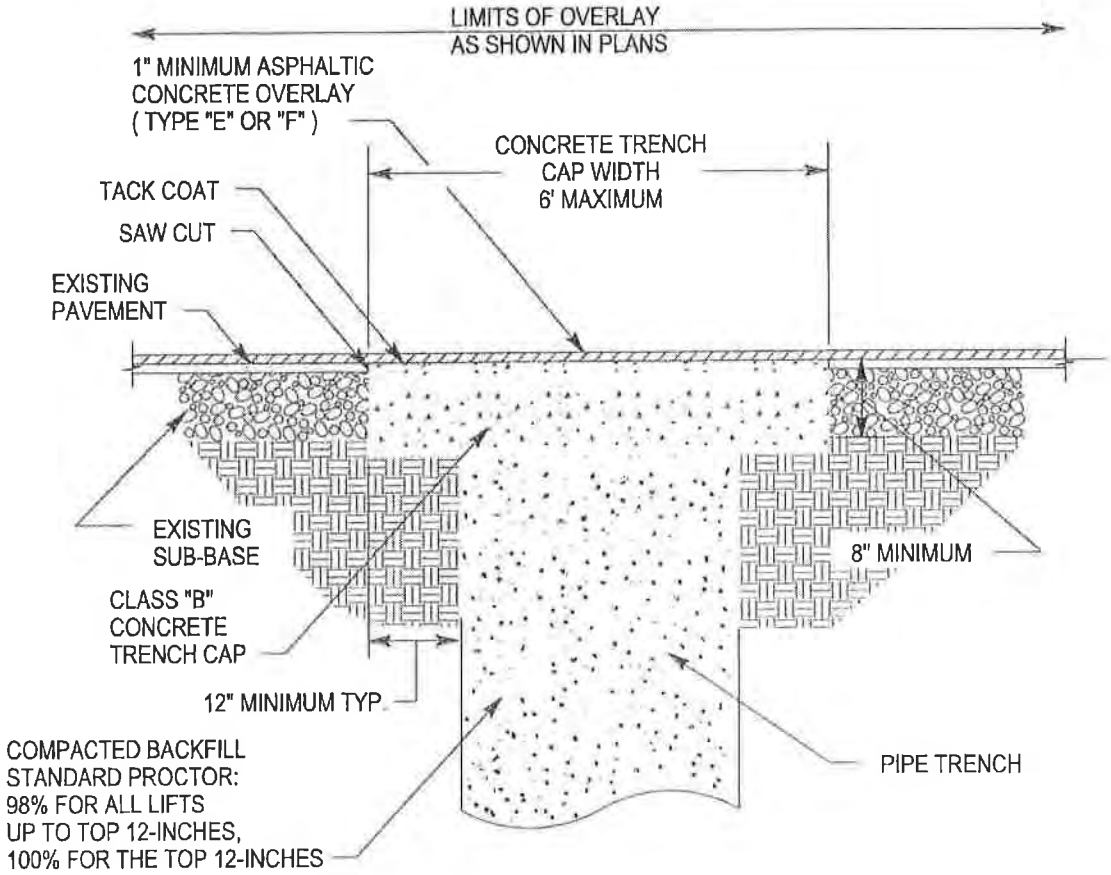

DETAIL 02510-5
COBB COUNTY WATER SYSTEM

GRADED AGGREGATE BASE/ ASPHALT BINDER/ ASPHALT SURFACE PAVEMENT REPLACEMENT

FEBRUARY 14, 2006

AGENCY DIRECTOR
Steve McCullers

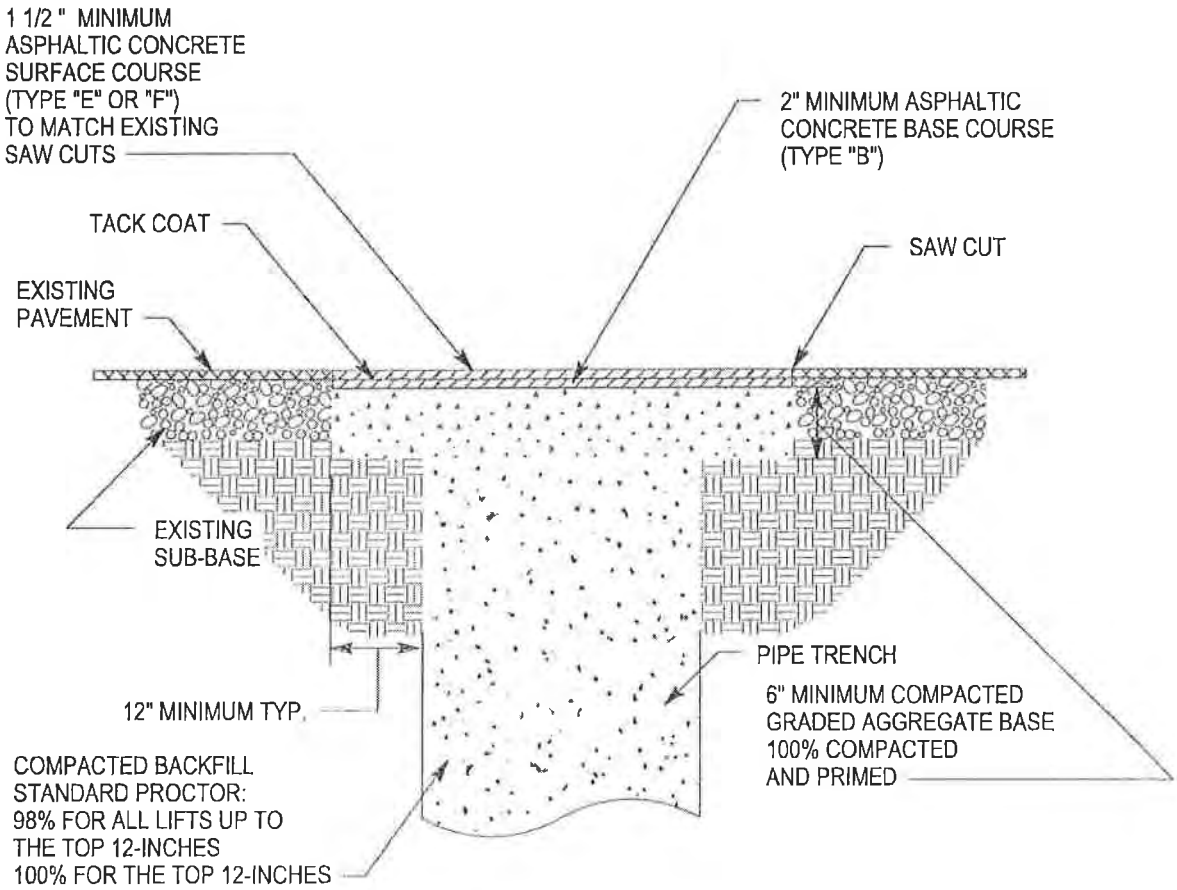

DETAIL 2510-06
COBB COUNTY WATER SYSTEM
TYPE "B" ASPHALT BINDER TRENCH CAP
(FOR LOCATIONS SUBJECT TO SUBSEQUENT MILLING/ PROFILING AND RESURFACING)

NOVEMBER 10, 2009

AGENCY DIRECTOR

Steve McCullers

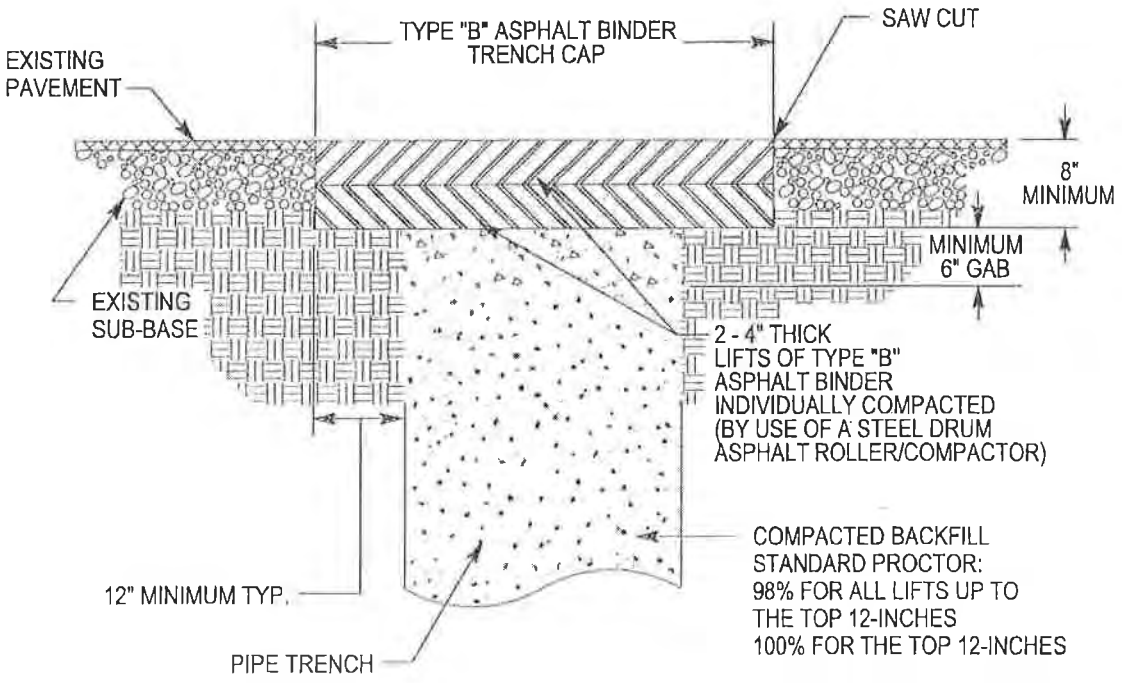

DETAIL 02713-1
COBB COUNTY WATER SYSTEM
WATER MAIN TRENCH DETAIL

FEBRUARY 15, 2006

AGENCY DIRECTOR

Steve McCullers

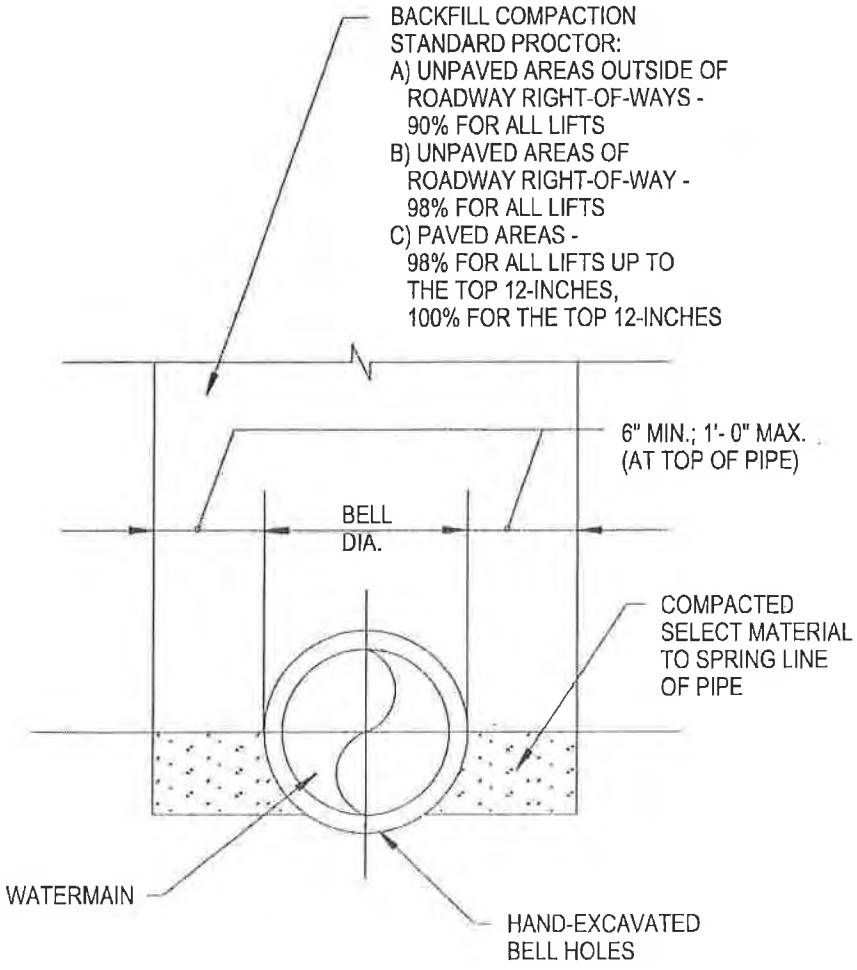

DETAIL 02713-2
COBB COUNTY WATER SYSTEM
FIRE HYDRANT INSTALLATION
(SUBDIVISION STANDARD)

AUGUST 7, 2001

AGENCY DIRECTOR

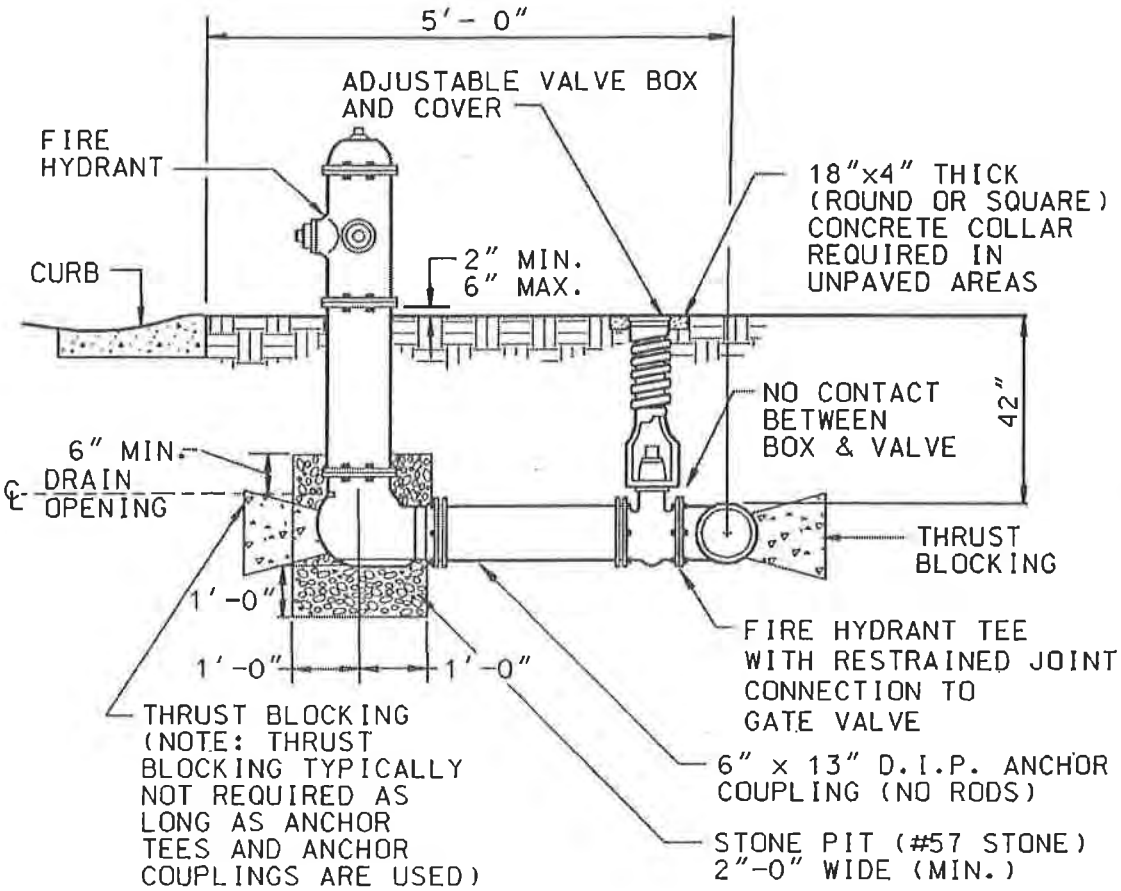

TYPICAL SECTION

DETAIL 02713-3
COBB COUNTY WATER SYSTEM
FIRE HYDRANT INSTALLATION
(ROADWAY STANDARD)

AUGUST 7, 2001

AGENCY DIRECTOR

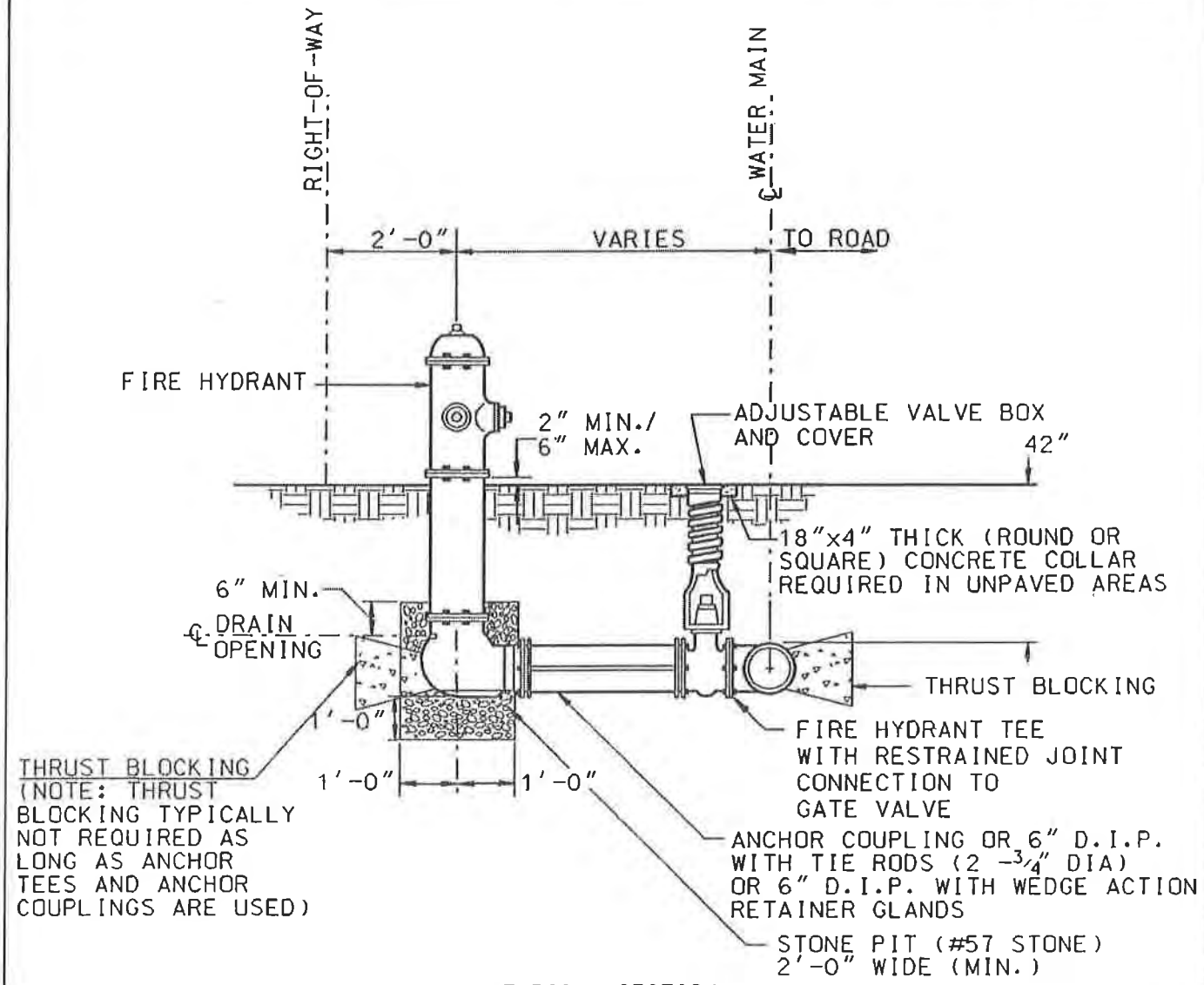

TYPICAL SECTION

NOTES:
1. TIE RODS TO BE ALLOY STEEL WITH MIN. TENSILE STRENGTH OF 125,000 P.S.I.. RODS TO BE COATED WITH BITUMONOUS PAINT AFTER INSTALLATION.
2. WEDGE ACTION RETAINER GLANDS SHALL BE EBAA IRON MEGALUG, FORD UNI-FLANGE SERIES 1400, OR EQUAL.

DETAIL 02713-4
COBB COUNTY WATER SYSTEM
VALVE INSTALLATION

JULY 9, 2008

AGENCY DIRECTOR

Steve McCullers

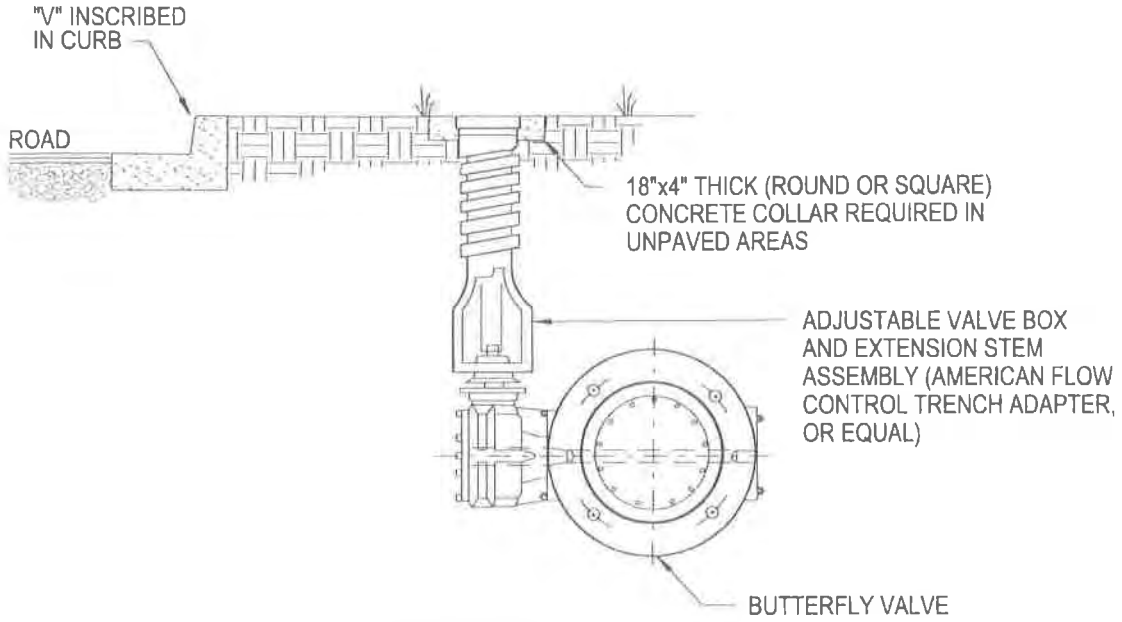

BUTTERFLY VALVE DETAIL

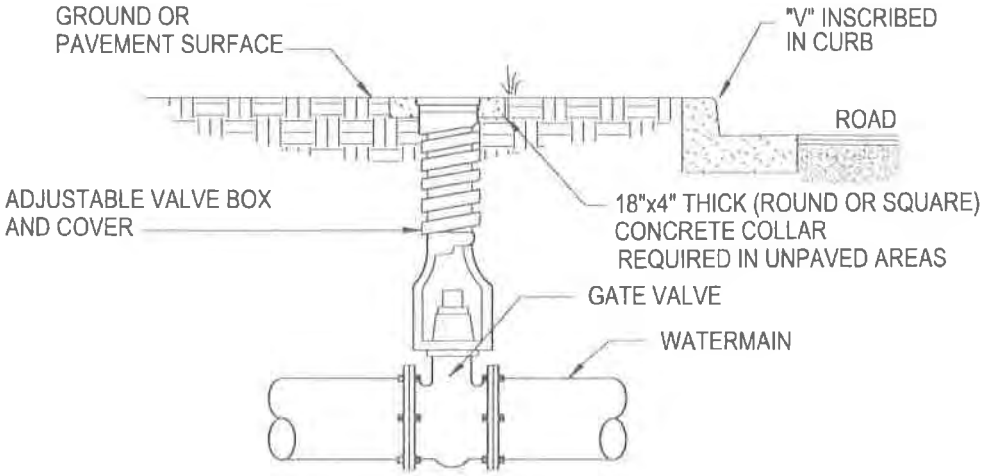

GATE VALVE DETAIL

DETAIL 02713-5
COBB COUNTY WATER SYSTEM
CONCRETE VALVE MARKER

AUGUST 7, 2001

AGENCY DIRECTOR

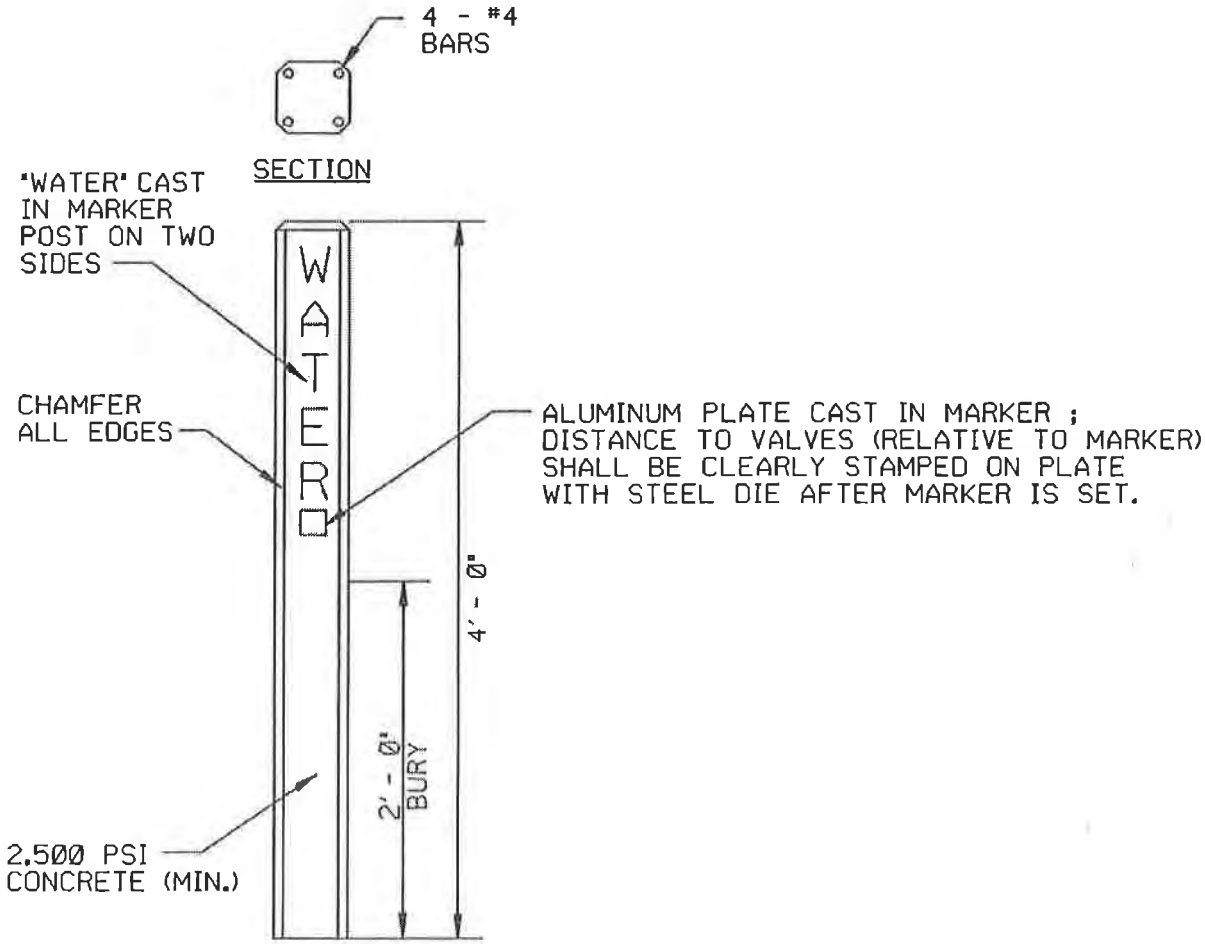

DETAIL 02713-6
COBB COUNTY WATER SYSTEM
LINE ABANDONMENT AT VALVE

AUGUST 7, 2001

AGENCY DIRECTOR

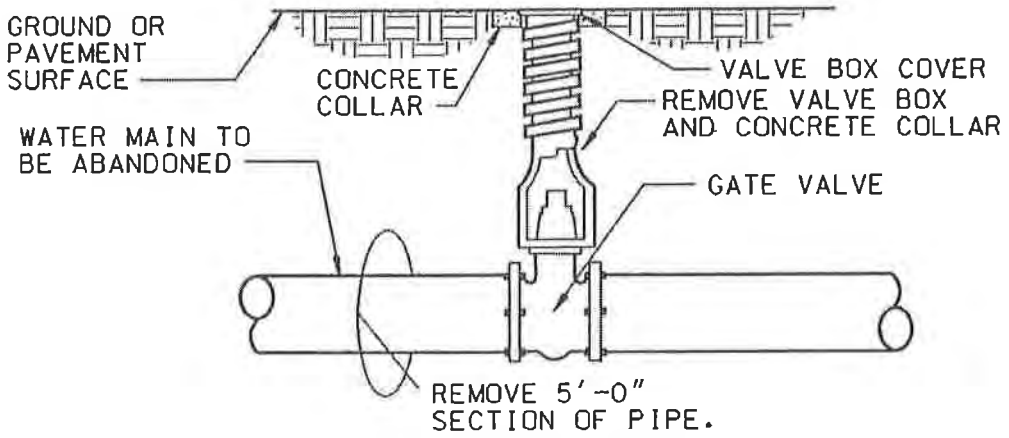

EXISTING SECTION

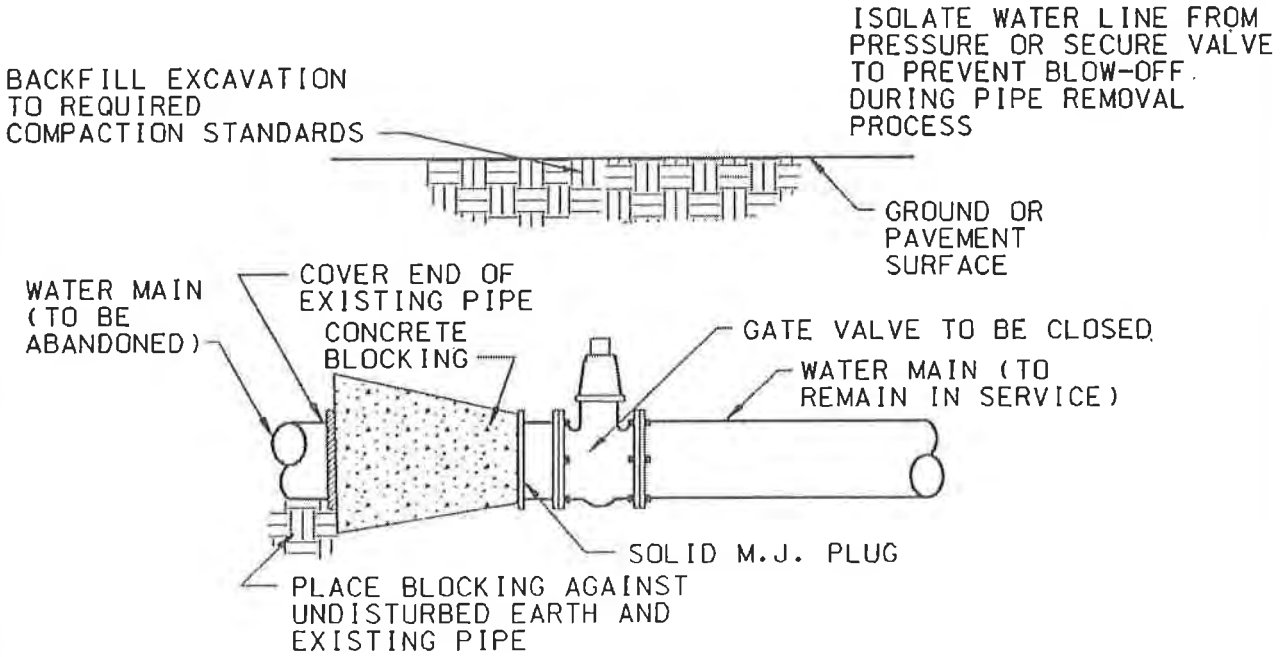

REVISED SECTION

DETAIL 02713-7
COBB COUNTY WATER SYSTEM
VALVE ABANDONMENT

AUGUST 7, 2001

AGENCY DIRECTOR

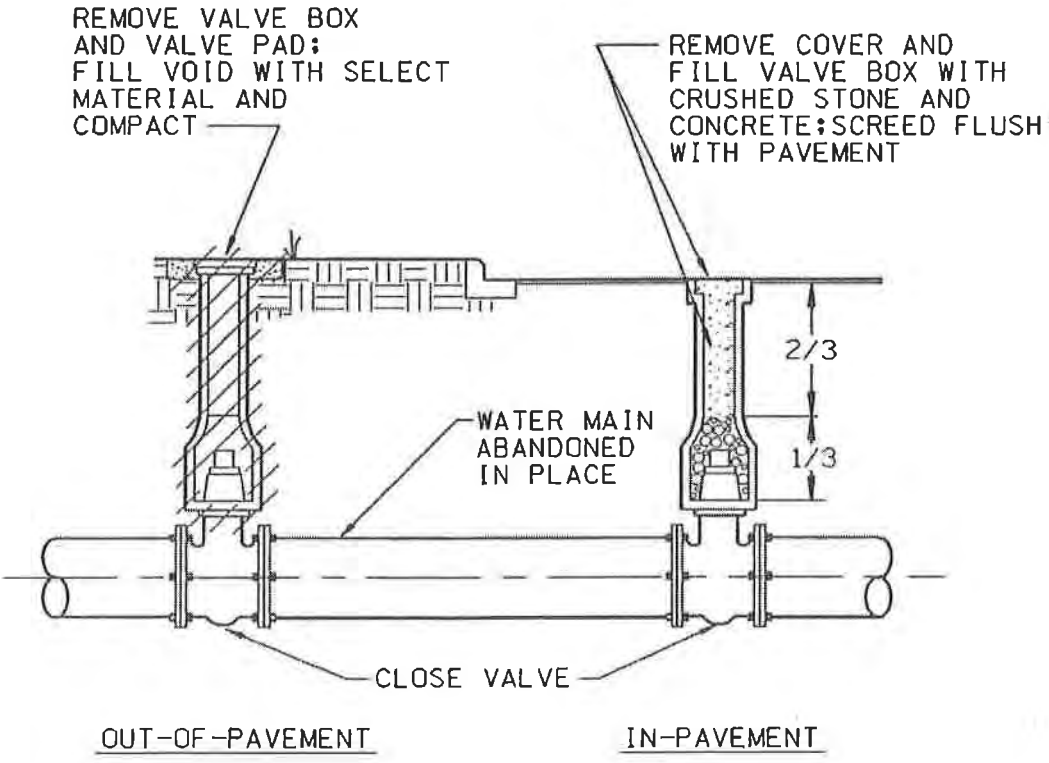

NOTE : REMOVE ANY VALVE MARKERS ASSOCIATED WITH ABANDONED VALVES

DETAIL 02713-8
COBB COUNTY WATER SYSTEM
WATER LINE VALVING AT INTERSECTION

JULY 8, 2008

AGENCY DIRECTOR

Steve McCullers

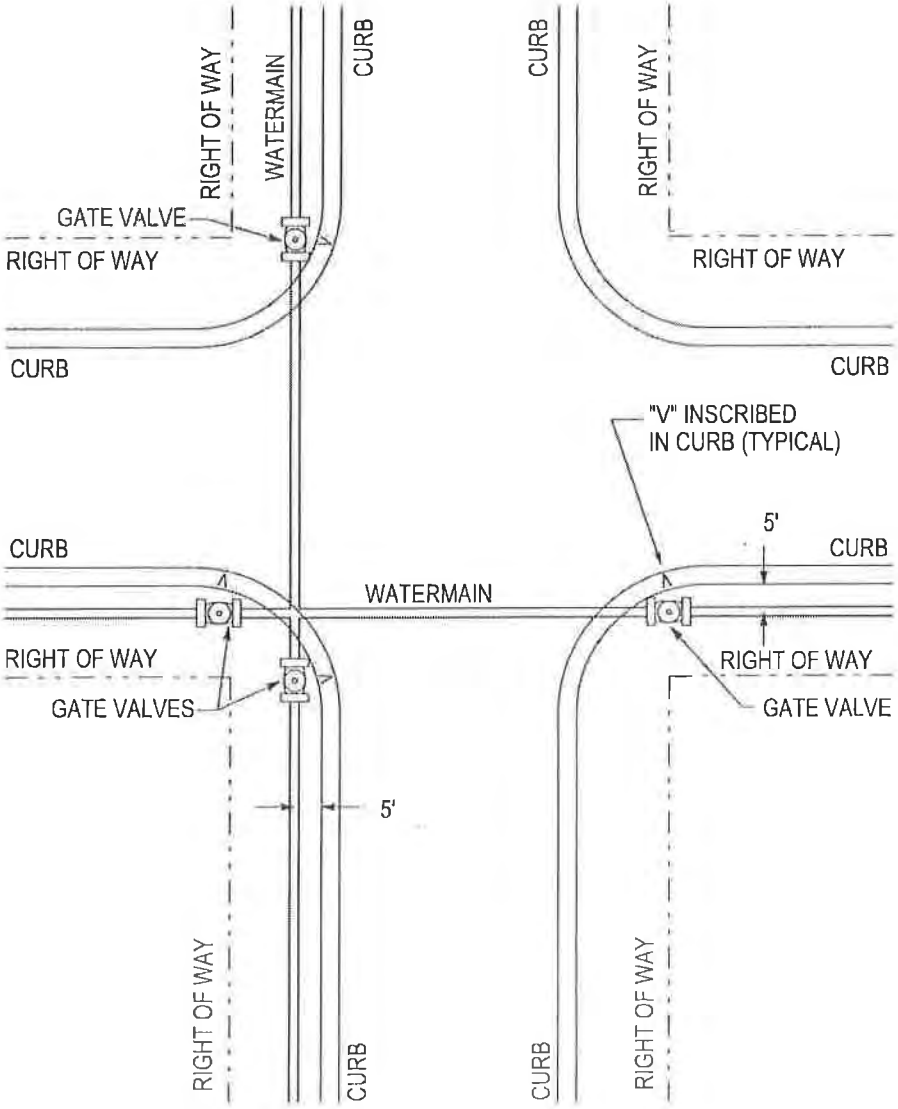

1. VALVES ARE TO BE LOCATED 5'-0" BEHIND THE CURB IN THE RIGHT OF WAY
2. VALVES SHALL NOT BE LOCATED IN THE DITCH LINE

DETAIL 02713-9 (B)
COBB COUNTY WATER SYSTEM
DEAD-END FIRE HYDRANT INSTALLATION
(NEW INSTALLATIONS)

OCTOBER 21, 2009

AGENCY DIRECTOR

Steve McCullers

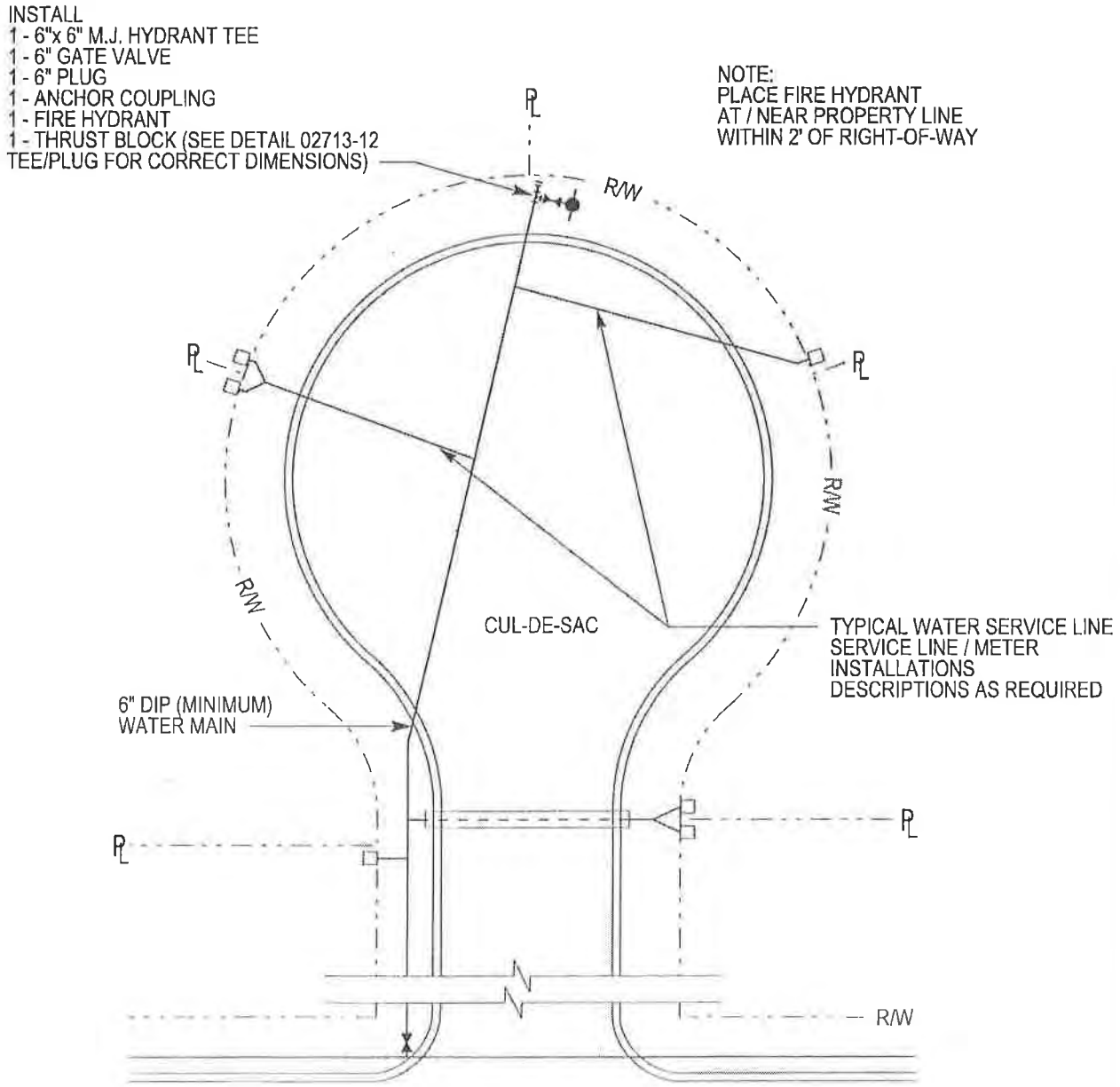

DETAIL 02713-11(A)
COBB COUNTY WATER SYSTEM

RESIDENTIAL CUL-DE-SAC COPPER WATERLINE SIZING WITH FIRE HYDRANT

OCTOBER 21, 2009

AGENCY DIRECTOR

Steve McCullers

NOTE:
ASSUME WATER LINE LINE PRESSURE APROX 80 PSI
15 GPM PER METER. MAX FLOW FOR ALL METERS.
ALL COPPER IS TYPE K, FLARED CONNECTIONS.

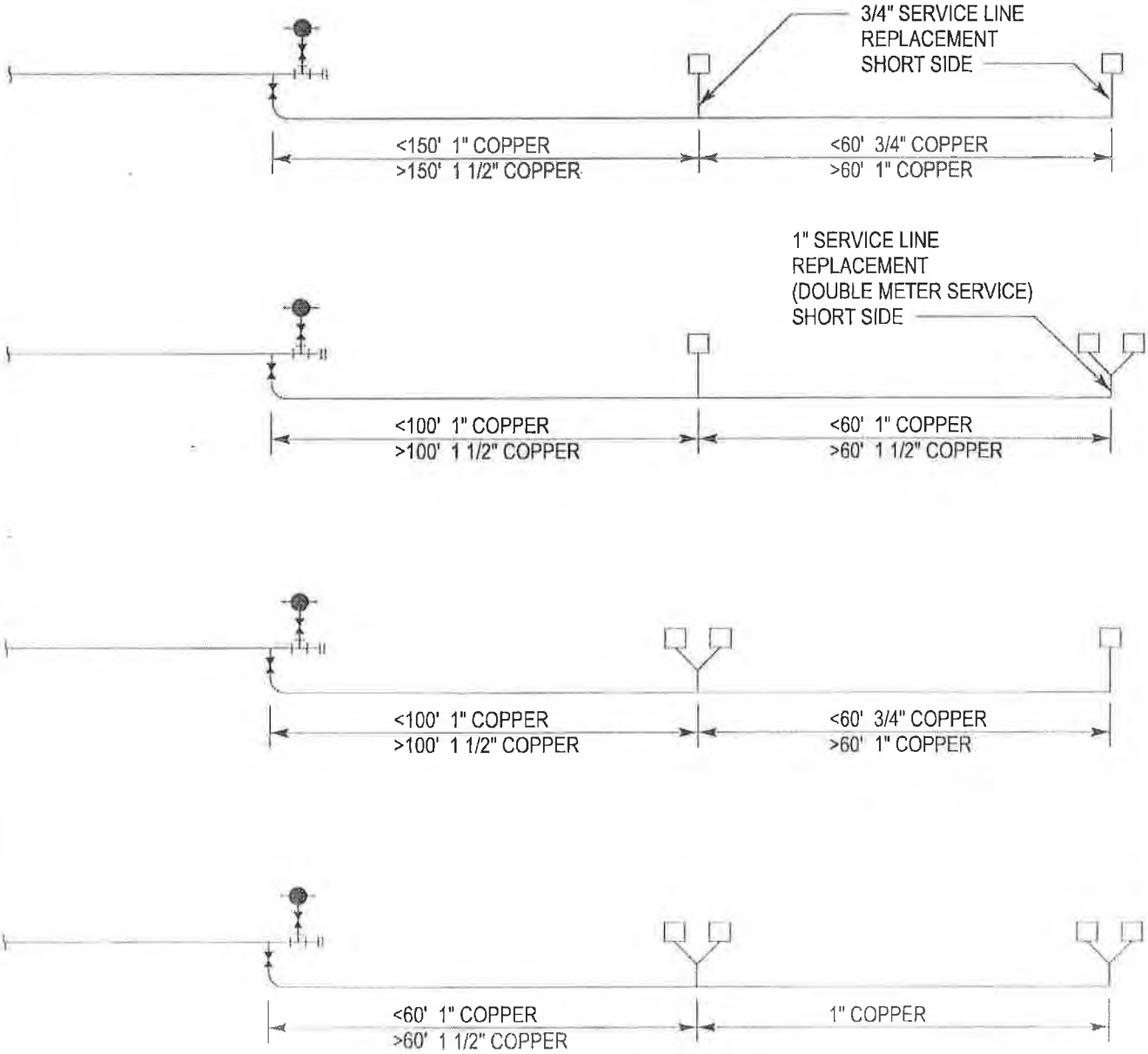

DETAIL 02713-11(B)
COBB COUNTY WATER SYSTEM

RESIDENTIAL CUL-DE-SAC COPPER WATERLINE SIZING WITHOUT FIRE HYDRANT

OCTOBER 21, 2009

AGENCY DIRECTOR

Steve McCullers

NOTE:
ASSUME WATER LINE LINE PRESSURE APROXIMATELY 80 PSI.
15 GPM PER METER MAXIMUM FLOW FOR ALL METERS.
ALL COPPER IS TYPE K, FLARED CONNECTIONS.

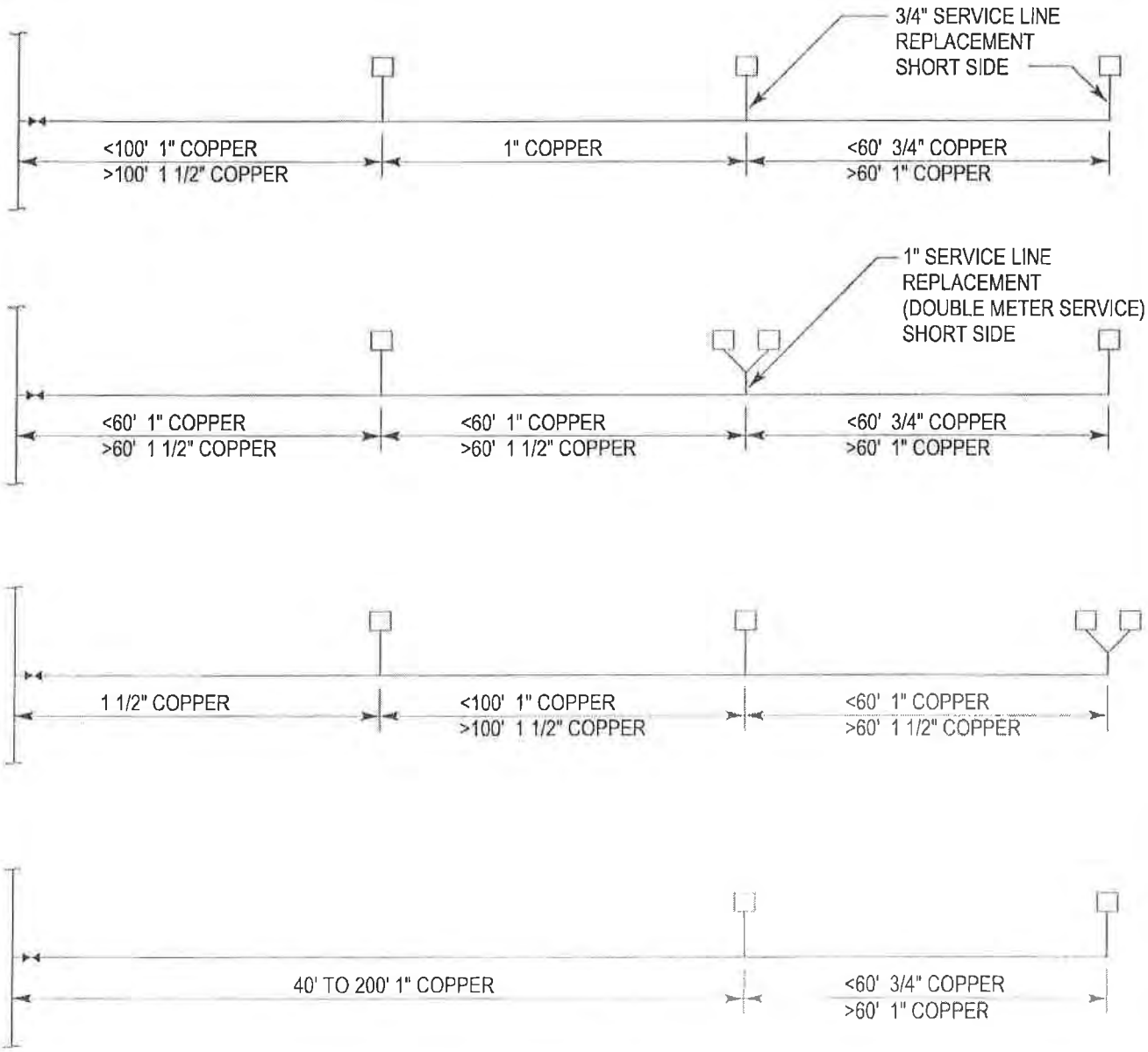

DETAIL 02713-11(C)
COBB COUNTY WATER SYSTEM

CURB STOP VALVING FOR 1" COPPER WATER MAIN

OCTOBER 21, 2009

AGENCY DIRECTOR

Steve McCullers

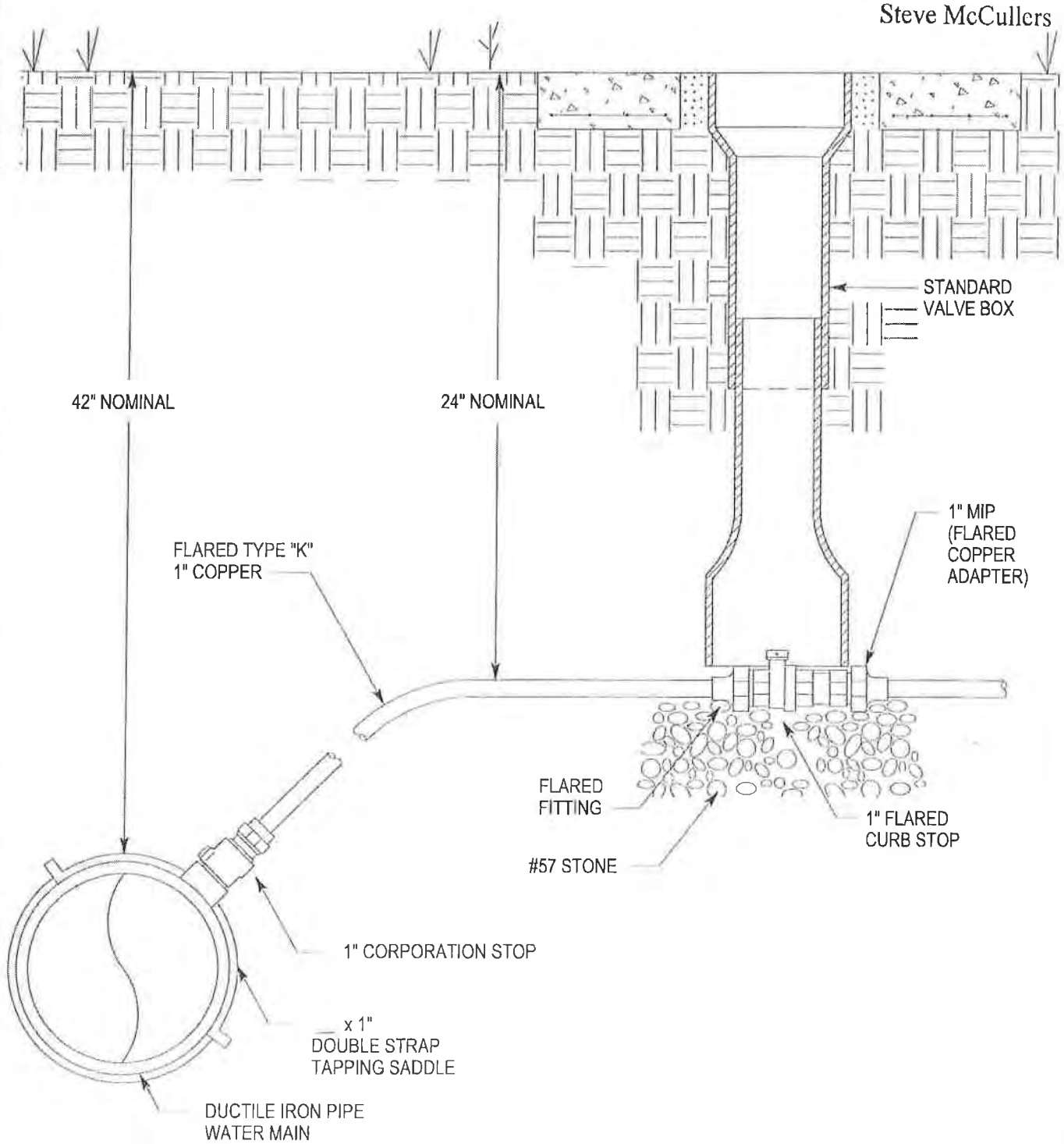

DETAIL 02713-11(D)
COBB COUNTY WATER SYSTEM

CURB STOP VALVING FOR 1 1/2" COPPER WATER MAIN

OCTOBER 21, 2009

AGENCY DIRECTOR

Steve McCullers

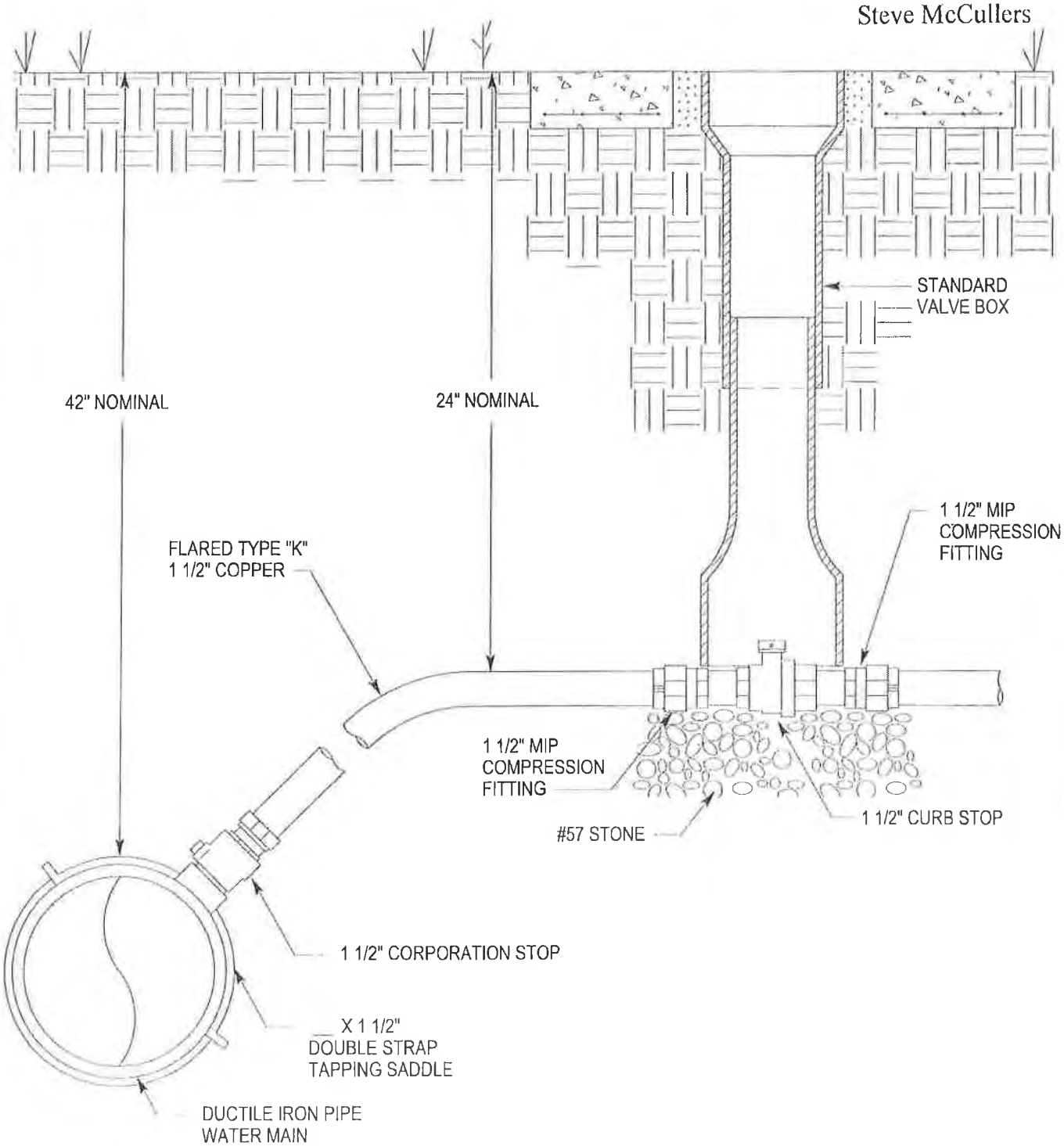

DETAIL 02713-12(A)
COBB COUNTY WATER SYSTEM
THRUST BLOCKING

AUGUST 7, 2001

AGENCY DIRECTOR

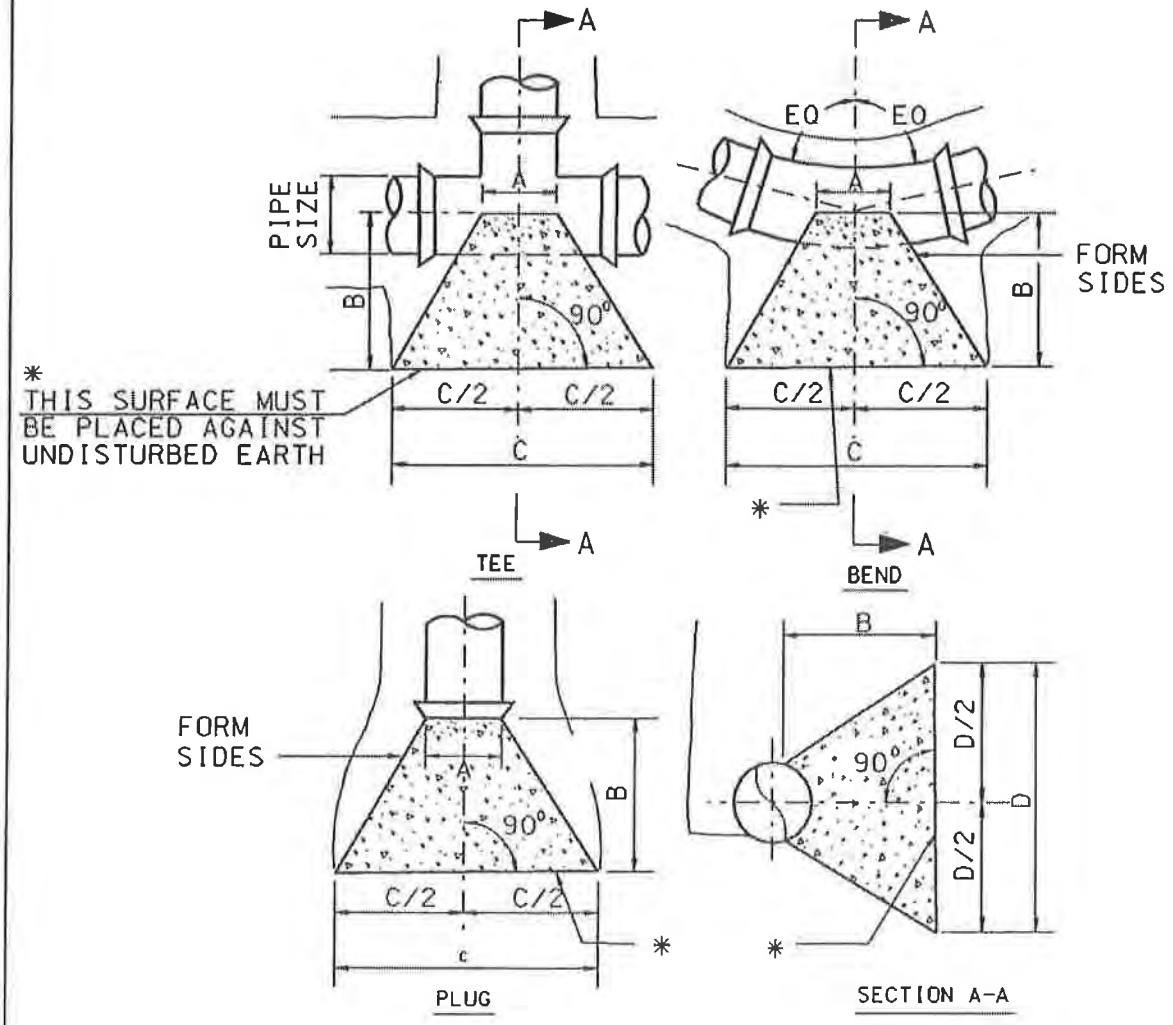

NOTES: 1. SEE DETAIL 02713-12B FOR DIMENSION TABLES

2. COVER CONTACT SURFACE ON JOINT WITH ROOFING FELT PRIOR TO PLACEMENT OF CONCRETE

DETAIL 02713-12(B)
COBB COUNTY WATER SYSTEM
THRUST BLOCK DIMENSIONS

AUGUST 7, 2001

AGENCY DIRECTOR

FITTING	PIPE DIA. (IN.)	THRUST	BLOCK	DIM.	(FEET)	APPROX. VOL. (C.Y.)	BEARING AREA (SQ. FT.)	DESIGN THRUST (LbS.)
		A	B	C	D			
90° BEND	6	1.0	1.6	3.9	2.4	0.30	9.3	18,500
	8	1.2	2.1	5.2	3.1	0.66	15.9	31,825
	10	1.5	2.5	6.3	3.8	1.23	23.9	47,875
	12	1.7	3.0	7.5	4.5	2.05	33.8	67,705
	14	2.0	3.5	8.7	5.2	3.20	45.5	90,960
	16	2.2	4.0	9.9	5.9	4.69	58.8	117,645
	18	2.5	4.5	11.1	6.6	6.61	73.9	147,755
	20	2.7	5.0	12.3	7.4	8.95	90.6	181,290
	24	3.3	5.9	14.7	8.8	15.31	129.3	258,650
45° BEND	6	0.5	1.2	2.9	1.7	0.11	5.0	10,015
	8	0.6	1.5	3.8	2.3	0.25	8.6	17,230
	10	0.8	1.9	4.6	2.8	0.47	13.0	25,920
	12	0.9	2.2	5.5	3.3	0.79	18.3	36,655
	14	0.9	2.6	6.4	3.8	1.21	24.6	49,250
	16	1.0	2.9	7.3	4.4	1.78	31.8	63,695
	18	1.1	3.3	8.2	4.9	2.50	40.0	80,000
	20	1.2	3.6	9.0	5.4	3.40	49.1	98,155
	24	1.5	4.3	10.8	6.5	5.81	70.0	140,040
22 1/2° BEND	6	0.5	0.8	2.1	1.2	0.04	2.6	5,120
	8	0.6	1.1	2.7	1.6	0.10	4.4	8,810
	10	0.8	1.3	3.3	2.0	0.18	6.6	13,250
	12	0.9	1.6	4.0	2.4	0.30	9.4	18,740
	14	0.9	1.8	4.6	2.8	0.46	12.6	25,175
	16	1.0	2.1	5.2	3.1	0.67	16.3	32,560
	18	1.1	2.3	5.8	3.5	0.94	20.4	40,895
	20	1.2	2.6	6.5	3.9	1.28	25.1	50,175
	24	1.5	3.1	7.7	4.6	2.19	35.8	71,585
11 1/4° BEND	6	0.5	0.6	1.5	0.9	0.02	1.3	2,580
	8	0.6	0.8	1.9	1.2	0.04	2.2	4,440
	10	0.8	0.9	2.4	1.4	0.07	3.3	6,675
	12	0.9	1.1	2.8	1.7	0.12	4.7	9,440
	14	0.9	1.3	3.2	2.0	0.17	6.3	12,680
	16	1.0	1.5	3.7	2.2	0.25	8.2	16,400
	18	1.1	1.7	4.2	2.5	0.35	10.3	20,595
	20	1.2	1.8	4.6	3.3	0.48	12.6	25,270
	24	1.5	2.2	5.5	5.8	0.83	18.0	36,055
TEE /PLUG	6	1.0	1.3	3.3	2.0	0.19	6.5	13,080
	8	1.2	1.7	4.3	2.6	0.41	11.2	22,500
	10	1.5	2.1	5.3	3.2	0.76	16.9	33,850
	12	1.7	2.5	6.3	3.8	1.26	23.9	47,870
	14	2.0	2.9	7.3	4.4	1.97	32.2	64,315
	16	2.2	3.3	8.3	5.0	2.88	41.6	83,185
	18	2.5	3.8	9.3	5.6	4.06	52.2	104,475
	20	2.7	4.2	10.4	6.2	5.49	64.1	128,190
	24	3.3	5.0	12.4	7.4	9.40	91.4	182,885

Thrust Block Notes:

1. The dimensions and values in these tables are based on the following:
   a. Water main test pressure = 350 p.s.i.
   b. Horizontal bearing strength of soil = 2,000 p.s.f.
2. The bearing surface of the thrust block shall be placed against undisturbed soil. If this is not possible, the fill between the bearing surface and undisturbed soil shall be compacted to at least 95% Modified Proctor density.

DETAIL 02713-12(C)
COBB COUNTY WATER SYSTEM
THRUST RESTRAINT: CONCRETE COLLAR WITH RODDING SYSTEM

AUGUST 7, 2001

AGENCY DIRECTOR

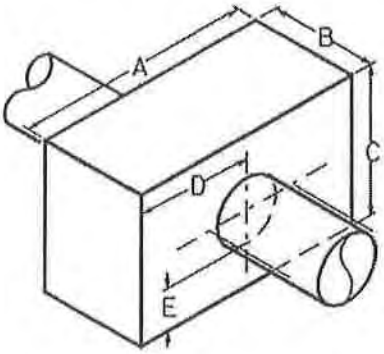

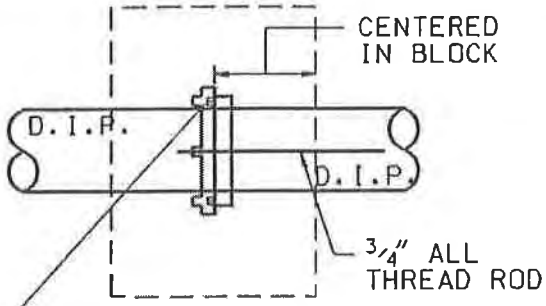

RETAINER GLAND
TORQUE SET SCREWS IN ACCORDANCE WITH MANUFACTURER'S INSTRUCTIONS.
INSPECTOR MUST WITNESS INSTALLATION.

MINIMUM DIMENSIONS IN FEET FOR CONCRETE COLLAR ON DUCTILE IRON PIPE TO BE USED WITH EMBEDDED DUCTILE IRON RETAINER GLAND

PIPE SIZE	A	B	C	D	E	VOLUME CU.YDS.	CONC. WT.	THRUST
4"	3'- 6"	3'- 0"	1'- 5"	1'- 6"	1'- 0"	0.55	2230	3150
6"	4'- 0"	3'- 0"	2'- 7"	2'- 0"	1'- 0"	1.15	4650	7070
8"	4'- 6"	3'- 0"	3'- 0"	2'- 3"	1'- 3"	1.50	6075	12,570
10"	5'- 2"	3'- 0"	3'- 2"	2'- 7"	1'- 3"	1.81	7330	19,635
12"	5'- 9"	3'- 0"	3'- 8"	2'- 10½"	1'- 8"	2.34	9475	28,775
14"	6'- 6"	3'- 0"	4'- 0"	3'- 3"	1'- 9"	2.89	11,700	38,490
16"	6'- 9"	3'- 0"	4'- 9"	3'- 3"	2'- 3"	3.56	14,410	50,270

NOTES :

1. ALL WATER MAINS GREATER THAN 18" I.D. SHALL BE INDIVIDUALLY CALCULATED BY C.C.W.S. ENGINEERING DEPARTMENT.
2. SOIL CONDITIONS SHALL BE VERIFIED BY THE ENGINEER BEFORE THRUST RESTRAINT DESIGN IS IMPLEMENTED.
3. PIPE MUST BE DUCTILE IRON.

DESIGN DATA :

1. DIMENSION OF THRUST RESTRAINT IN FEET BASED ON 2000 POUNDS PER SQUARE FOOT SOIL BEARING PRESSURE AND 230' PER SQUARE INCH TEST PRESSURE. ACTUAL INSIDE DIAMETER OF DUCTILE IRON PIPE, CLASS 31, USED AS STANDARD.
2. CONCRETE SHALL BE CLASS A, 3000 P.S.I.
3. UNDER ADVERSE CONSTRUCTION CONDITIONS, CONCRETE SHALL BE "HIGH EARLY" TYPE.

DETAIL 02713-13
COBB COUNTY WATER SYSTEM
WATER METER LOCATION FOR SUBDIVISION
(TYPICAL PLAN)

SEPTEMBER 27, 2001

AGENCY DIRECTOR

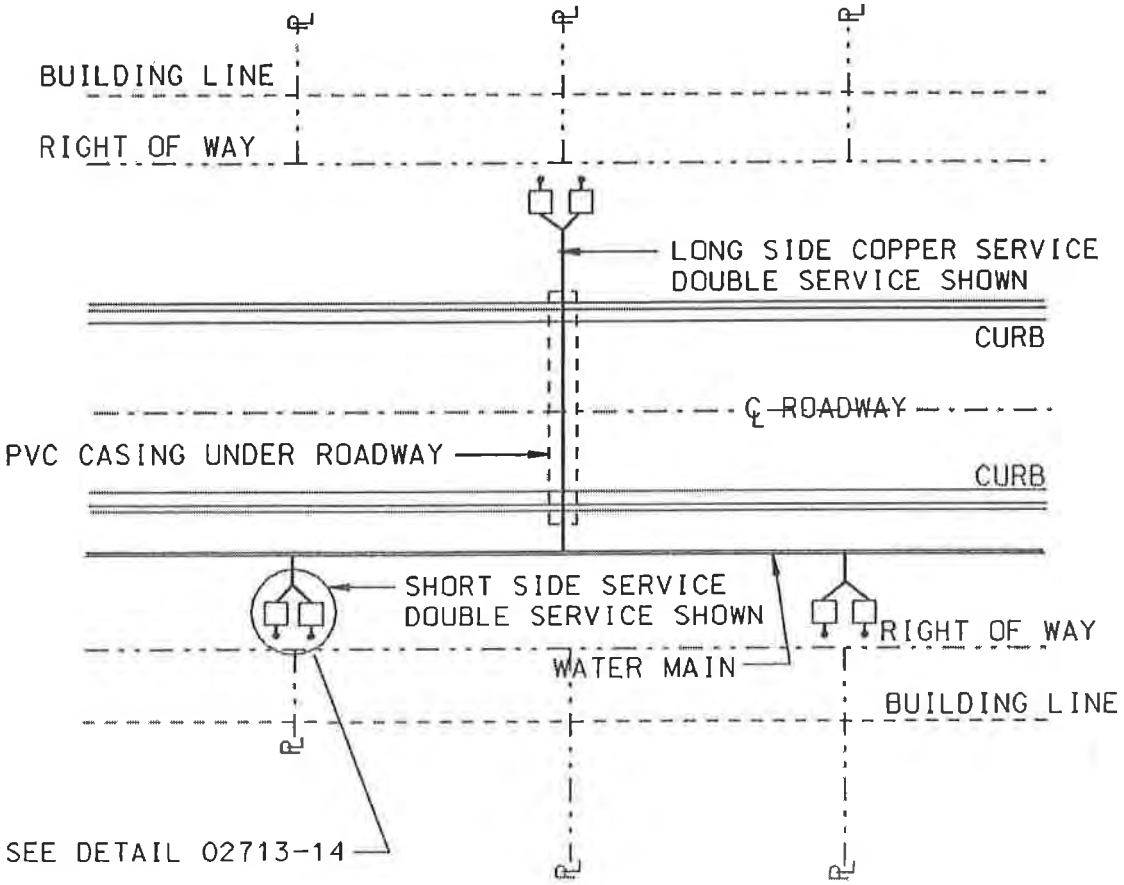

NOTE: DOUBLE SERVICE NOT ALLOWED ABOVE ELEVATION 1140.

DETAIL 02713-14A
COBB COUNTY WATER SYSTEM
¾" WATER METER INSTALLATION
(TYPICAL SECTION)

MAY 12, 2005

AGENCY DIRECTOR

Steve McCullers

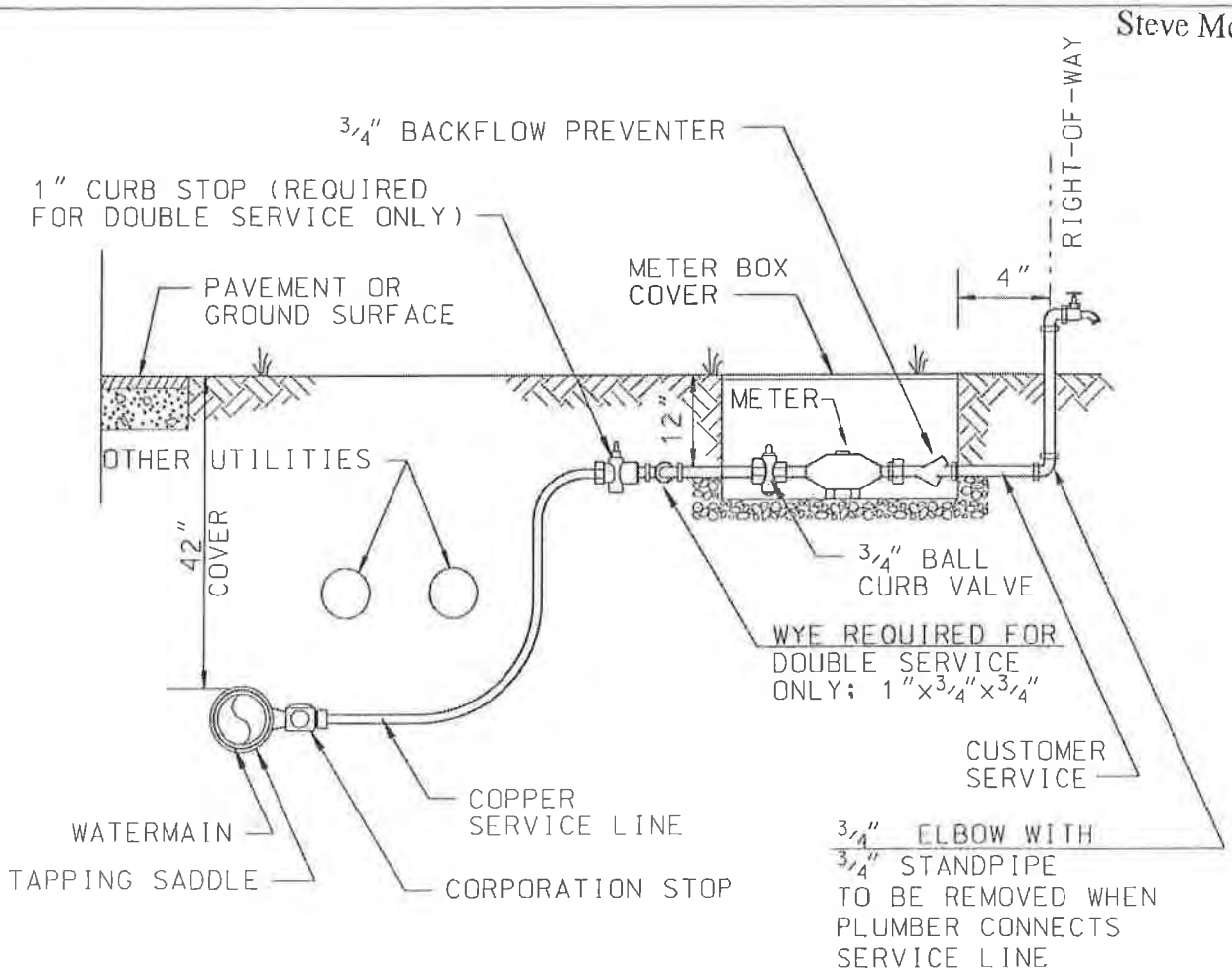

NOTE:
1. FITTINGS TO METER TO BE FLARED FITTINGS. PAST METER TO BE THREADED.
2. DOUBLE SERVICE NOT ALLOWED ABOVE ELEVATION 1140.

DESCRIPTION	SINGLE SERVICE	DOUBLE SERVICE
METER	¾"	(2)- ¾"
CORPORATION STOP	¾"	1"
COPPER SERVICE LINE	¾"	1"
CURB STOP	¾"	1"(2) ¾"
DOUBLE STRAP TAPPING SADDLE	¾"	1"
BALL CURB STOP	¾"	(2) ¾"

DETAIL 02713-14B
COBB COUNTY WATER SYSTEM
1" WATER METER INSTALLATION
(TYPICAL SECTION)

MAY 12, 2005

AGENCY DIRECTOR

Steve McCullers

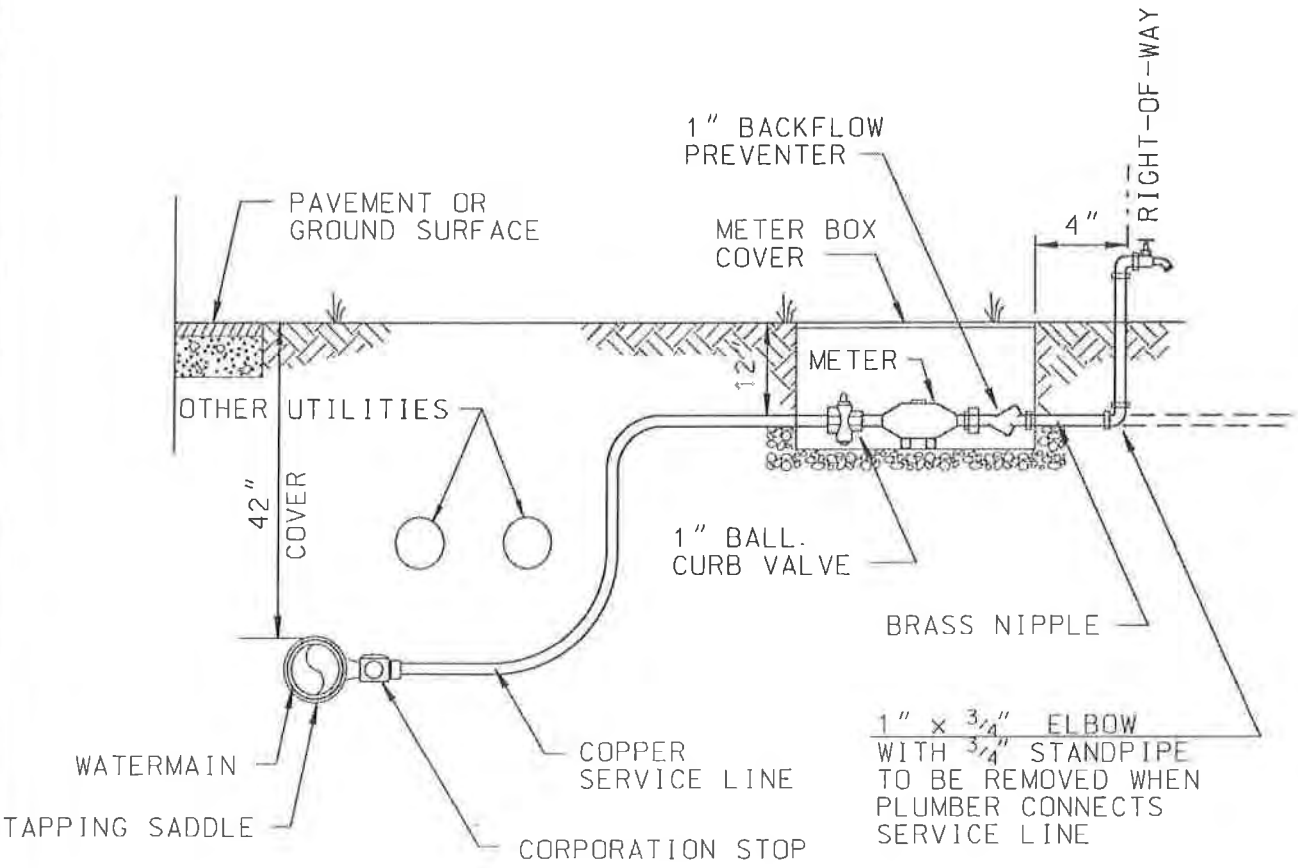

NOTE: FITTINGS TO METER TO BE FLARED
FITTINGS PAST METER TO BE THREADED

DETAIL 02713-14C
COBB COUNTY WATER SYSTEM
3/4" & 1" WATER METER BOX & LID DETAIL

SEPTEMBER 10, 2007

AGENCY DIRECTOR

Steve McCullers

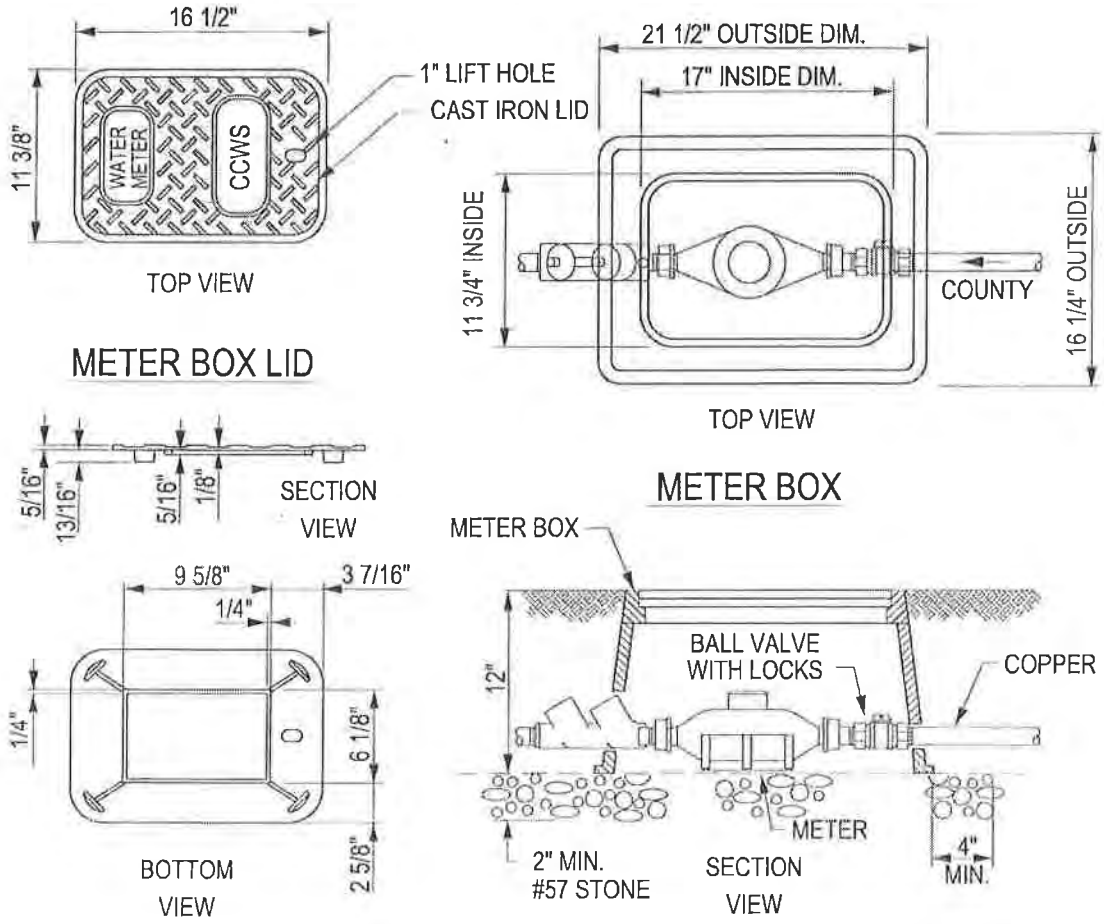

TYPICAL INSTALLATION

NOTE:
1. METER BOX LID TO BE CAST IRON - (VESTAL MFG. CO. OR APPROVED EQUIVALENT).
2. METER BOX TO BE NDS D1200 OR APPROVED EQUIVALENT.

DETAIL 02713-23
COBB COUNTY WATER SYSTEM
3/4" THRU 10" METER
INSTALLATION INFORMATION

OCTOBER 26, 2010

AGENCY DIRECTOR

Steve McCullers

METER SIZE & TYPE IN INCHES	RESIDENTIAL	COMMERCIAL	IRRIGATION ONLY (STANDARD)	DOMESTIC	COMBINED IRR. & DOM.	FIRE PROTECTION	SIZE OF METER BOX IN INCHES (OUTSIDE DIM.) W x L x D	SIZE OF METER VAULT IN FEET (OUTSIDE DIM.) W x L x D	CCWS VAULT I.D.	REQUIRED EASEMENT IN FEET W x L
3/4 x 3/4 *	X		X	X	X		14 x 20 1/4 x 18		#1	NONE
3/4 x 3/4		X	X				14 x 20 1/4 x 18		#1	5 1/2 x 4
1 *	X		X	X	X		14 x 20 1/4 x 18		#1	NONE
1		X	X	X	X		14 x 20 1/4 x 18		#1	5 1/2 x 4
1 1/2		X	X	X	X		24 x 36 x 18		#2	5 x 6
1 1/2 wBP		X	X	X	X		24 x 36 x 18		#2	5 x 6
2		X	X	X	X		24 x 36 x 18		#2	5 x 6
2 w2BP		X		X	X		24 X 36 x 18		#2	5 x 6
3 w2BP		X		X	X			5 x 8 x 5 1/2	A	9 x 10
4 w2BP		X		X	X			5 x 8 x 5 1/2	A	9 x 10
6 DC		X				X		5 x 8 x 5 1/2	A	9 x 10
6 FM x 1.5 or 2		X		X	X	X		7 x 13 x 5 1/2	B	11 x 15
8 DC		X				X		5 x 8 x 5 1/2	A	9 x 10
8 FM x 2		X		X	X	X		7 x 13 x 5 1/2	B	11 x 15
10 DC		X				X		5 x 9 1/2 x 5 1/2	C	9 x 11 1/2
10 FM x 2		X		X	X	X		11 x 15 x 5 1/2	D	15 x 17

w2BP _____ WITH 2" BYPASS LINE
DC _____ DOUBLE CHECK VALVE ASSEMBLY, WITH NO BYPASS LINE (FIRE PROTECTION ONLY)
6FM x 1.5 or 2 ___ FIRELINE AND MASTER METER - 6" SIZE OF FIRE LINE METER,
1.5" or 2" "SIZE OF LOW FLOW METER.
ALL FM METERS INCLUDE 6" BYPASS LINE.

CCWS ID

#1 _____ STANDARD 12" x 17" METER BOX
#2 _____ STANDARD 24" x 36" METER BOX
A _____ 4'-0" x 7'-0" x 5'-0" CONCRETE VAULT WITH LID. HATCH 3'-0"x 3'-0"x 0'- 1/4" REC.
B _____ 6'-0" x 12'-0" x 5'-0" CONCRETE VAULT WITH LID. HATCH 3'-0"x 3'-0"x 0'- 1/4" REC.
C _____ 4'-0" x 8'-6" x 5'-0" CONCRETE VAULT WITH LID. HATCH 3'-0"x 3'-0"x 0'- 1/4" REC.
D _____ 10'-0" x 14'-0" x 5'-0" CONCRETE VAULT WITH LID. HATCH 4'-0"x 4'-0"x 0'- 1/4" REC.

REQUIRED EASEMENT 5 1/2 x 4 — 5 1/2 EQUALS FOOTAGE ALONG RIGHT OF WAY;
4 EQUALS FOOTAGE PERPENDICULAR TO RIGHT OF WAY.

* CCWS WILL PROVIDE 3/4"AND 1" BACKFLOW DEVICES TO BE INSTALLED WITH RESIDENTIAL 3/4" AND 1" METER INSTALLATIONS.

DETAIL 02713-30
COBB COUNTY WATER SYSTEM
WATER MAIN IN STREET INSTALLATION

FEBRUARY 14, 2006

AGENCY DIRECTOR

Steve McCullers

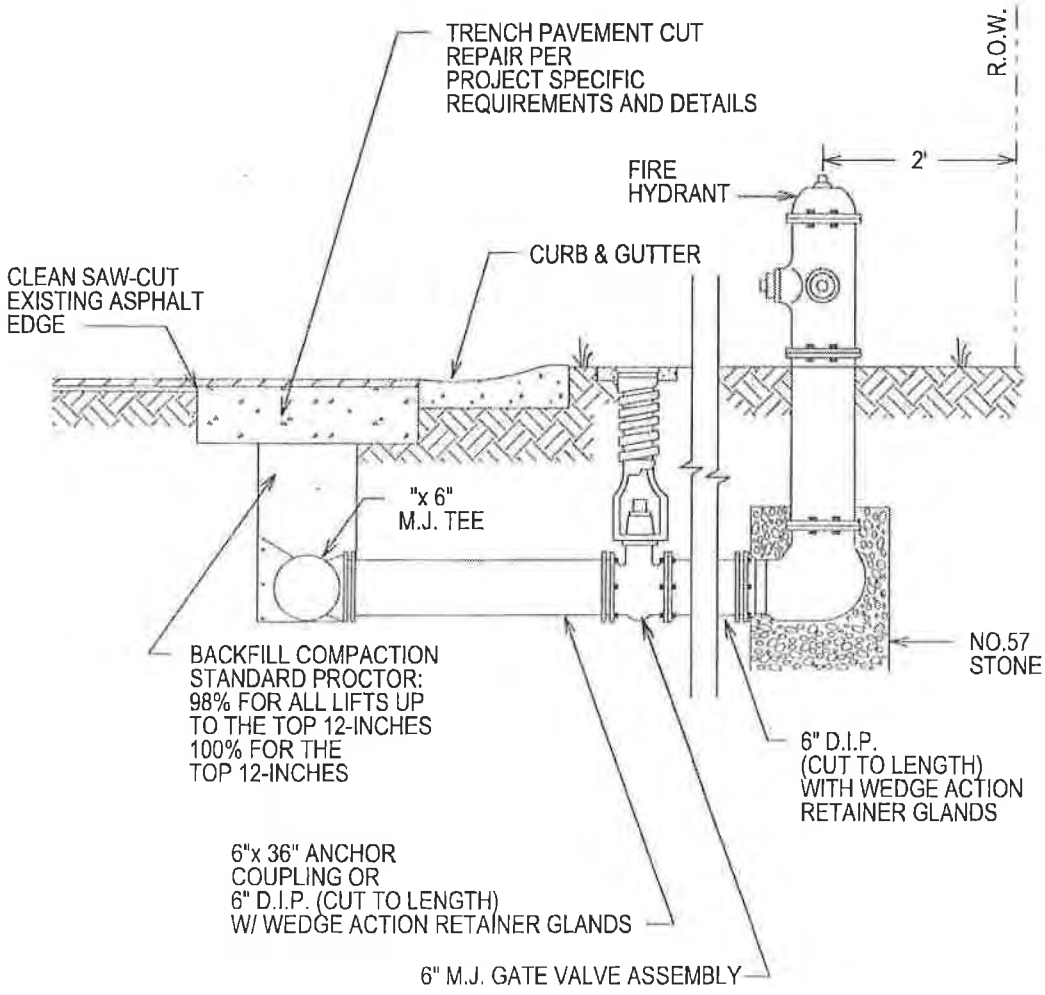

DETAIL 02713-31
COBB COUNTY WATER SYSTEM
WATER MAIN IN STREET INSTALLATION

FEBRUARY 14, 2006

AGENCY DIRECTOR

Steve McCullers

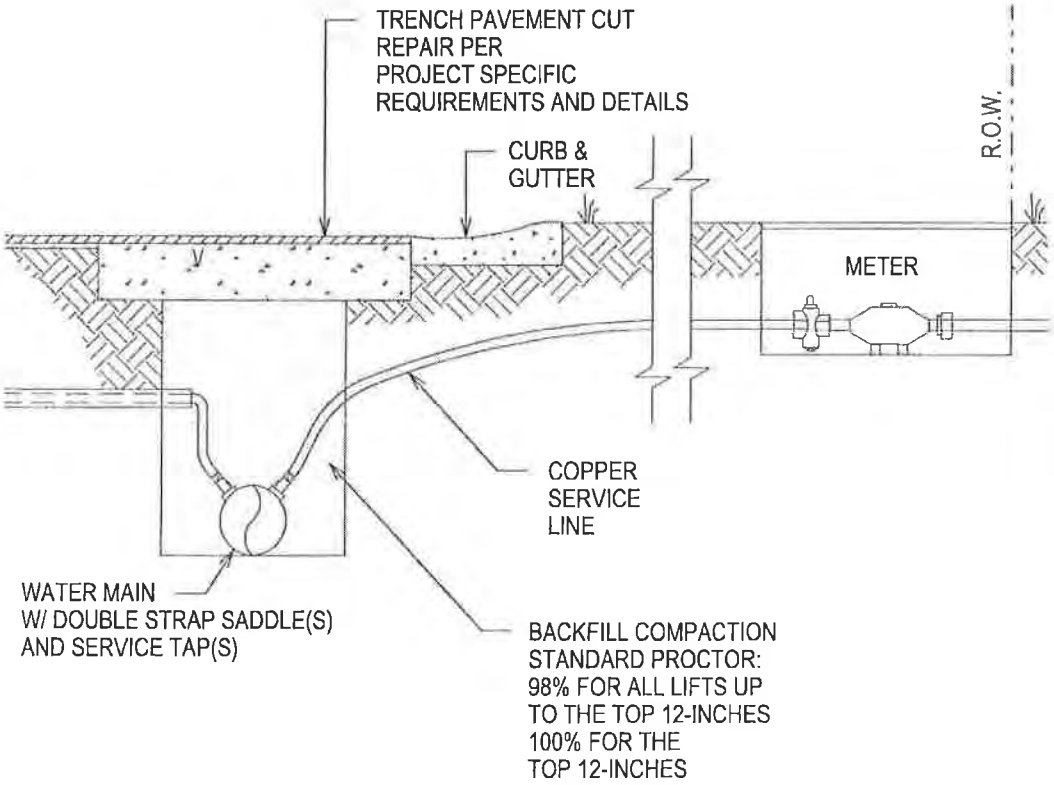

DETAIL 02713-32
COBB COUNTY WATER SYSTEM
VALVE RAISING OUT OF PAVEMENT

AUGUST 7, 2001

AGENCY DIRECTOR

Steve McCullers

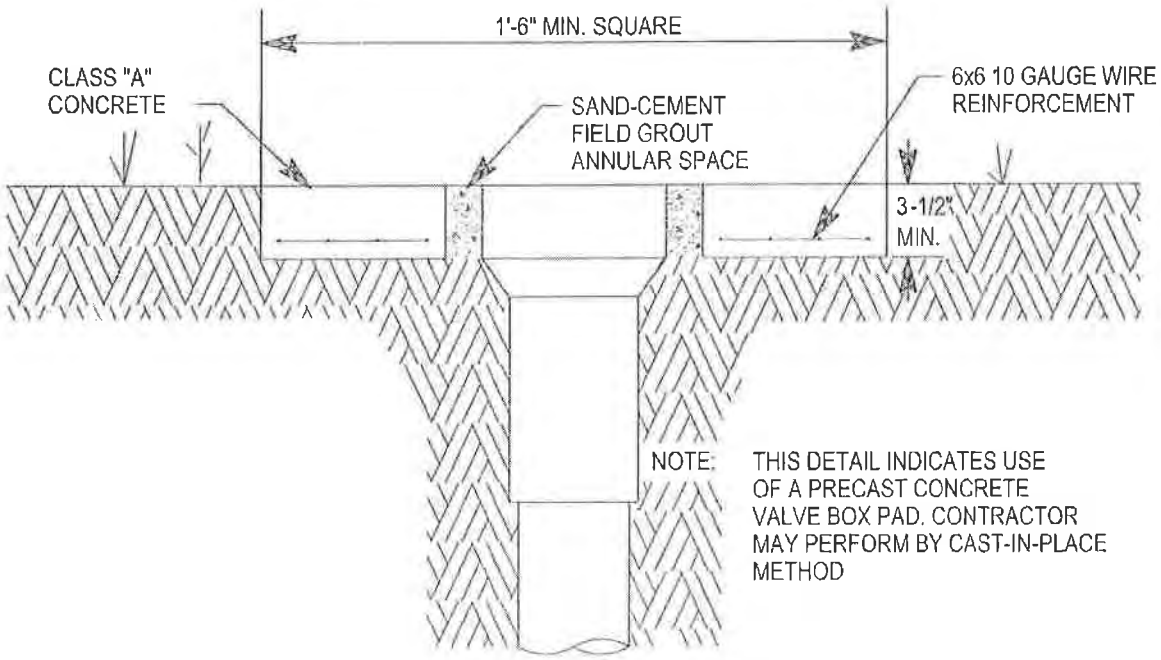

NOTE: THIS DETAIL INDICATES USE OF A PRECAST CONCRETE VALVE BOX PAD. CONTRACTOR MAY PERFORM BY CAST-IN-PLACE METHOD

GENERAL NOTES

1. IF REPLACEMENT IS NECESSARY, VALVE BOX SHALL BE APPROVED STANDARD CAST IRON ADJUSTABLE WITH A MIN. DIA. OF 5 -1/4". THE CASTING SHALL BE COATED WITH COAL-TAR PITCH VARNISH. THE LID SHALL BEAR THE WORD "WATER" OR THE LETTER "W". BOXES SHALL BE EQUAL TO VULCAN PATTERN VVB-4. NO EXISTING VALVE BOX SHALL BE REUSED IF CRACKED, OR OTHERWISE DAMAGED, OR IF FOUND INAPPROPRIATE FOR SERVICE IN THE LOCATION.

2. VALVE BOX SHALL BE CLEANED OF ANY EXISTING DEBRIS, DIRT, SILT, GRAVEL, ETC. AND/OR STRAIGHTENED TO ENSURE POSITIVE ACCESSIBILITY OF THE VALVE OPERATING NUT OR HANDWHEEL.

DETAIL 02713-33
COBB COUNTY WATER SYSTEM

VALVE RAISING IN STREET AFTER REPAVING

JUNE 20, 2007

AGENCY DIRECTOR

Steve McCullers

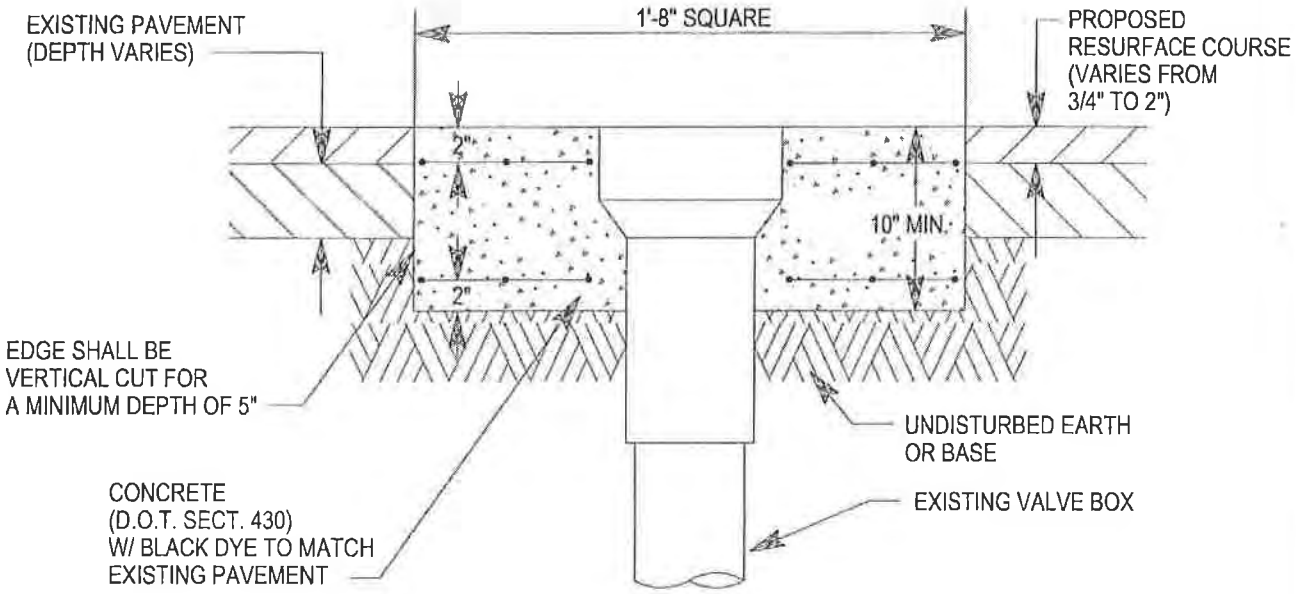

NOTES:
CONCRETE FOR COLLAR SHALL BE A MINIMUM OF 10" DEEP OR FROM THE TOP OF THE VALVE BOX, FLUSH WITH THE NEWLY RESURFACED PAVEMENT, TO UNDISTURBED EARTH.
REINFORCEMENT SHALL BE CUT-TO-FIT MAT OF 6"x 6", 10x10 GAUGE WELDED WIRE FABRIC

GENERAL NOTES

1. IF REPLACEMENT IS NECESSARY, VALVE BOX SHALL BE APPROVED STANDARD CAST IRON ADJUSTABLE WITH A MIN. DIA. OF 5 1/4" THE CASTING SHALL BE COATED WITH COAL-TAR PITCH VARNISH. THE LID SHALL BEAR THE WORD "WATER" OR THE LETTER "W". BOXES SHALL BE EQUAL TO VULCAN PATTERN V V B-4. NO EXISTING VALVE BOX SHALL BE REUSED IF CRACKED, OR OTHERWISE DAMAGED, OR IF FOUND INAPPROPRIATE FOR SERVICE IN THE LOCATION.

2. VALVE BOX SHALL BE CLEANED OF ANY EXISTING DEBRIS, DIRT, SILT, GRAVEL, ETC. AND/OR STRAIGHTENED TO ENSURE POSITIVE ACCESSIBILITY OF THE VALVE OPERATING NUT OR HANDWHEEL.

DETAIL 02713-42

NEW DOMESTIC/IRRIGATION COMBINATION METER WITH BACK FLOW PREVENTION DEVICE INSTALLATION DEVELOPER INSTALLED

NOVEMBER 28, 2007

AGENCY DIRECTOR

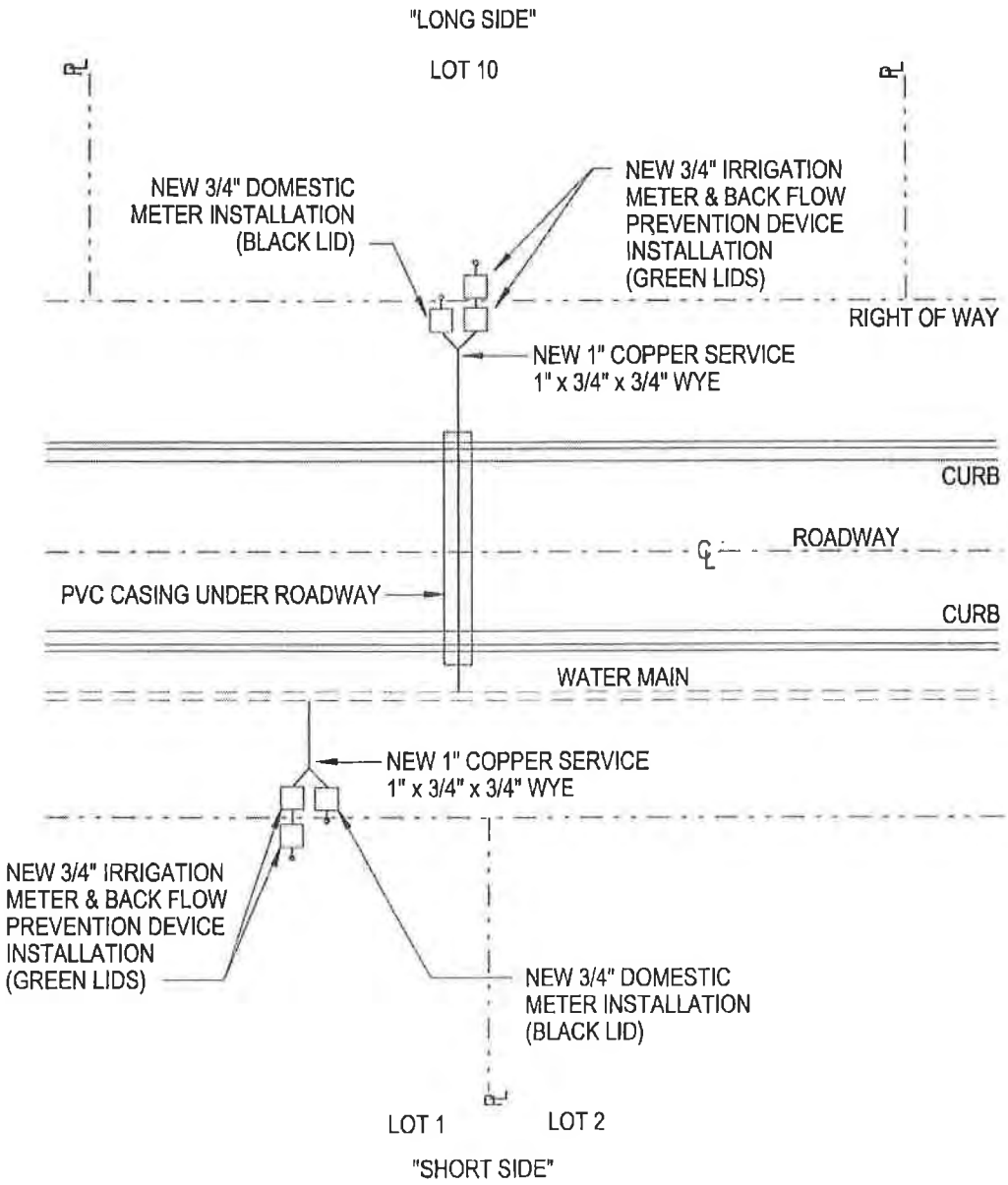

NOTE: DOUBLE SERVICES FOR DOMESTIC NOT ALLOWED WITH IRRIGATION METERS.

DETAIL 02713-50
COBB COUNTY WATER SYSTEM
ILLUSTRATION OF TYPICAL RESIDENTIAL WATER SUPPLY

SEPTEMBER 8, 2009

AGENCY DIRECTOR

Steve McCullers

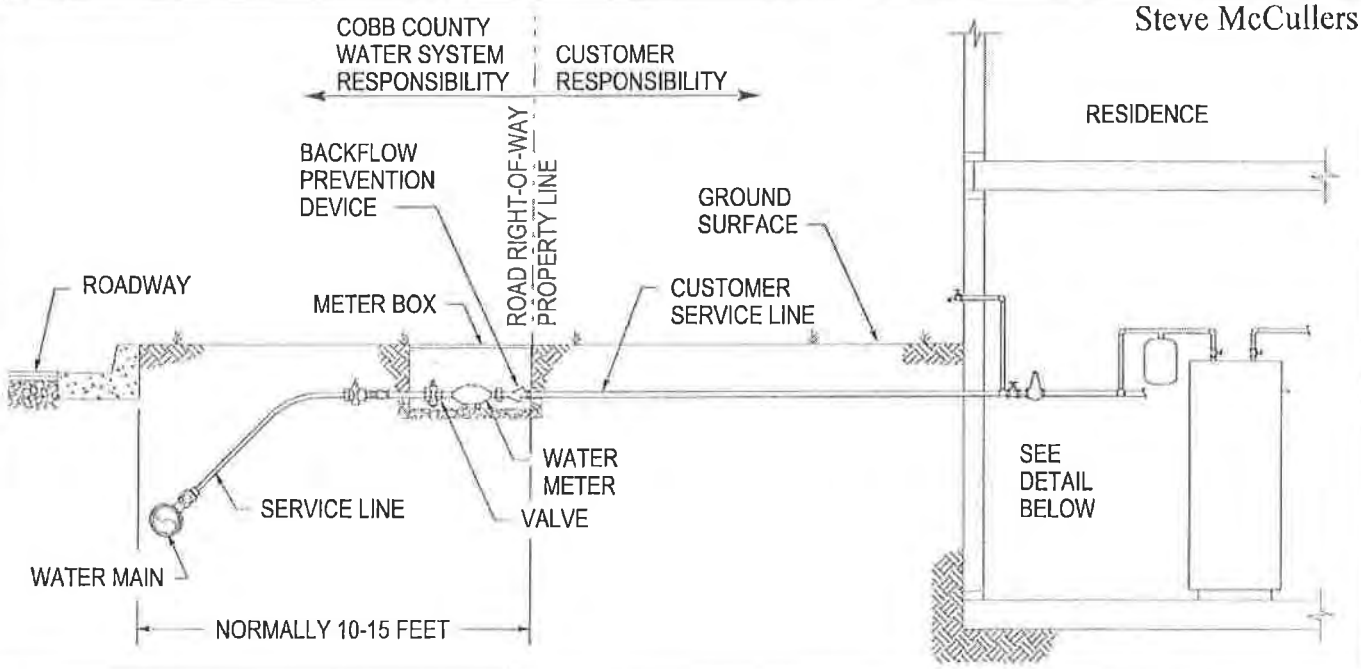

DETAIL

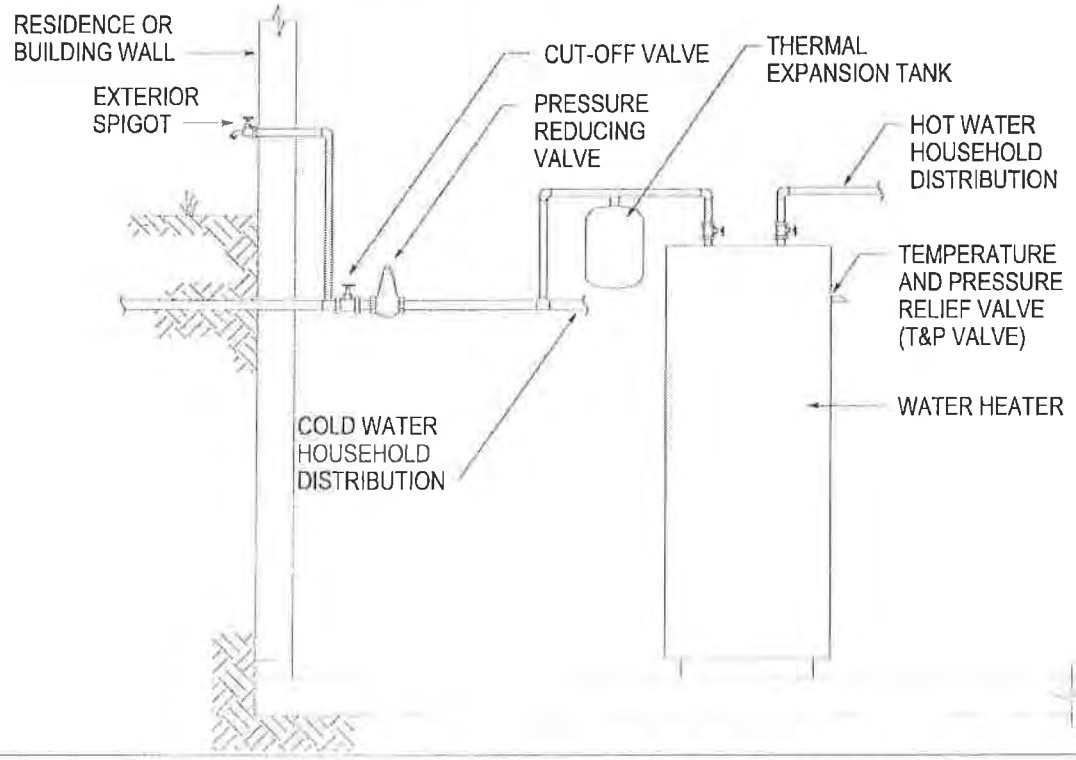

DETAIL 02722-1
COBB COUNTY WATER SYSTEM
SEWER TRENCH DETAIL

AUGUST 22, 2011

Steve McCollum
AGENCY DIRECTOR

BACKFILL COMPACTION (STANDARD PROCTOR)
A. UNPAVED AREAS OUTSIDE OF ROADWAY RIGHT-OF-WAYS: 90% FOR ALL LIFTS
B. UNPAVED AREAS OF ROADWAY RIGHT-OF-WAY: 98% FOR ALL LIFTS
C. PAVED AREAS: 98% FOR ALL LIFTS UP TO THE TOP 12-INCHES, 100% FOR THE TOP 12-INCHES

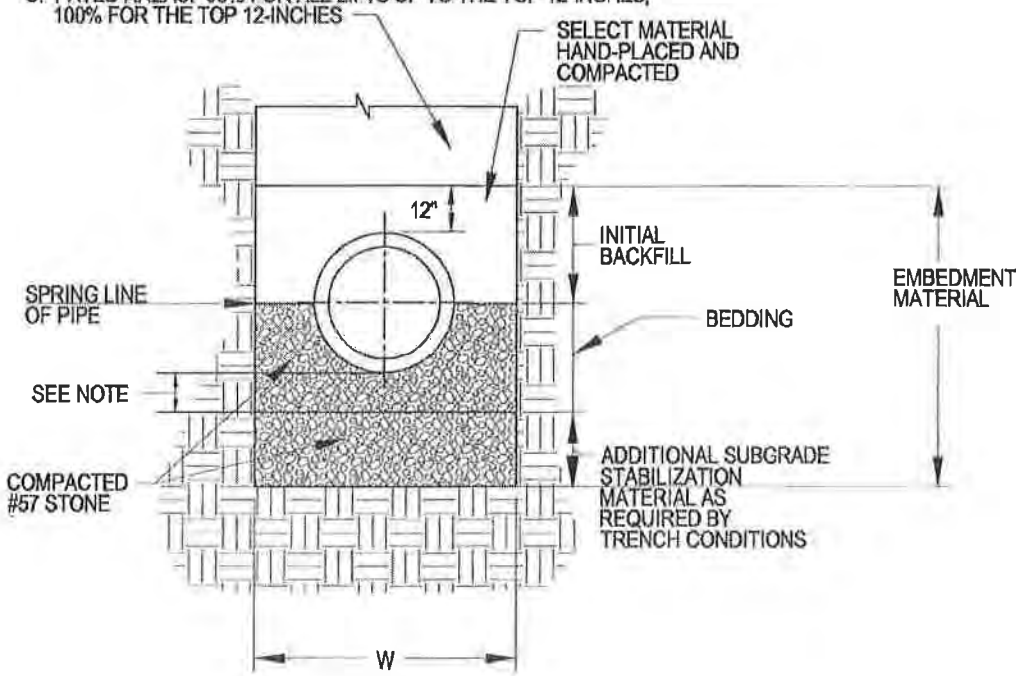

W = TRENCH WIDTH DEFINED AS NOMINAL PIPE OUTSIDE DIAMETER PLUS TWO FEET FOR MEASUREMENT AND PAYMENT OF ADDITIONAL SUBGRADE STABILIZATION MATERIAL ALLOWANCE AND/OR ROCK EXCAVATION ALLOWANCE (AS APPLICABLE AND AS AUTHORIZED)

NOTE:
BEDDING DEPTH BELOW PIPE TO BE AS FOLLOWS:
SERVICE LATERALS = 4" MINIMUM
SEWERS - 8" DIA. TO 18" DIA. = 6" MINIMUM
SEWERS - GREATER THAN 18" DIA. = PIPE DIA./3

DETAIL 02722-2
COBB COUNTY WATER SYSTEM
SEWER SERVICE CONNECTION

AUGUST 22, 2011

AGENCY DIRECTOR

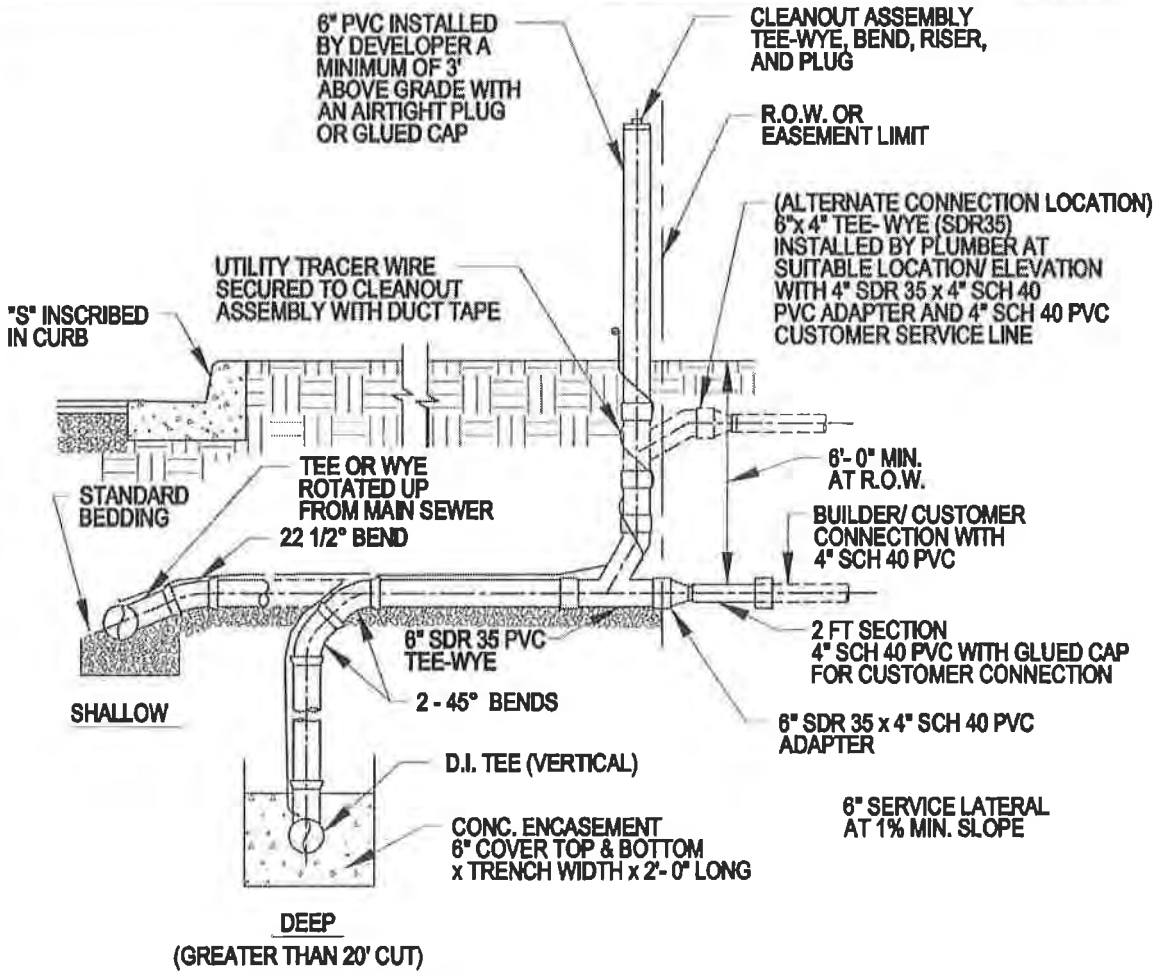

6" CLEANOUT ASSEMBLY ADJUSTED TO LANDSCAPE GRADE BY BUILDER AT TIME OF CONNECTION

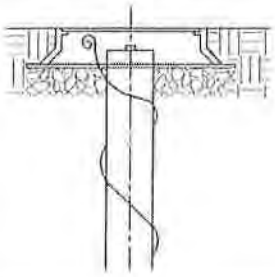

15" DIA. CAST IRON RING AND COVER (VESTAL RMC-15-H, OR EAST JORDAN IRON WORKS V-8502 OR EQUAL)

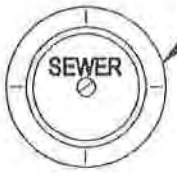

COVER
(PLAN VIEW)

NOTES:

1. UTILITY TRACER SYSTEM REQUIRED REFER TO DETAIL 02722-4B
2. ONLY 1 SINGLE FAMILY RESIDENCE PER SEWER SERVICE CONNECTION
3. SERVICE LATERAL BEDDING & BACKFILL TO CONFORM TO DETAIL 02722-1, EXCEPT BEDDING DEPTH UNDER PIPE TO BE 4" MIN.

DETAIL 02722-3
COBB COUNTY WATER SYSTEM
DRY SEWER

AUGUST 5, 2008

AGENCY DIRECTOR

Steve McCullers

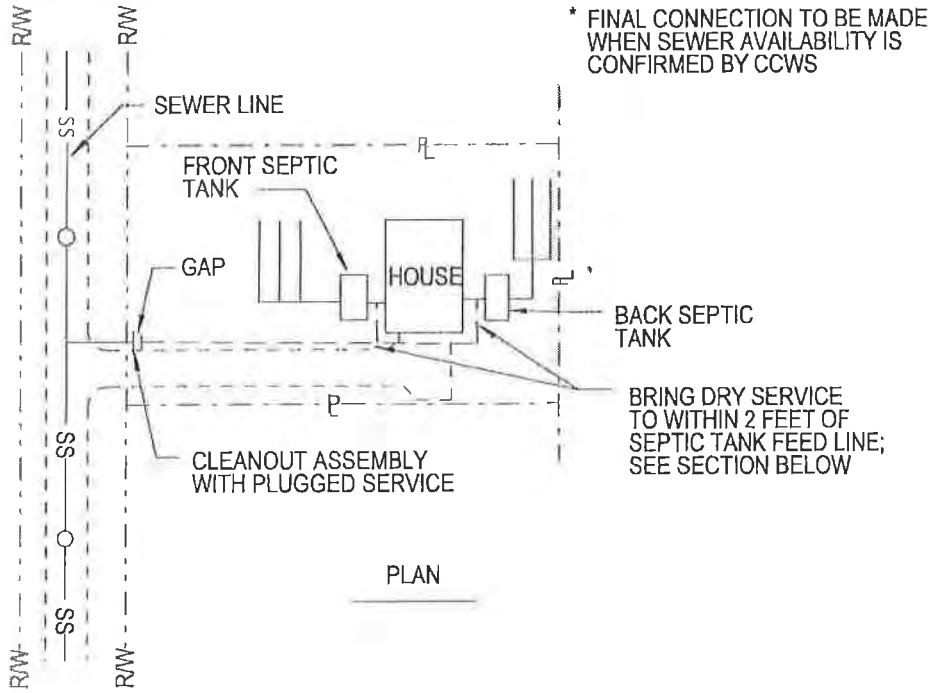

PLAN

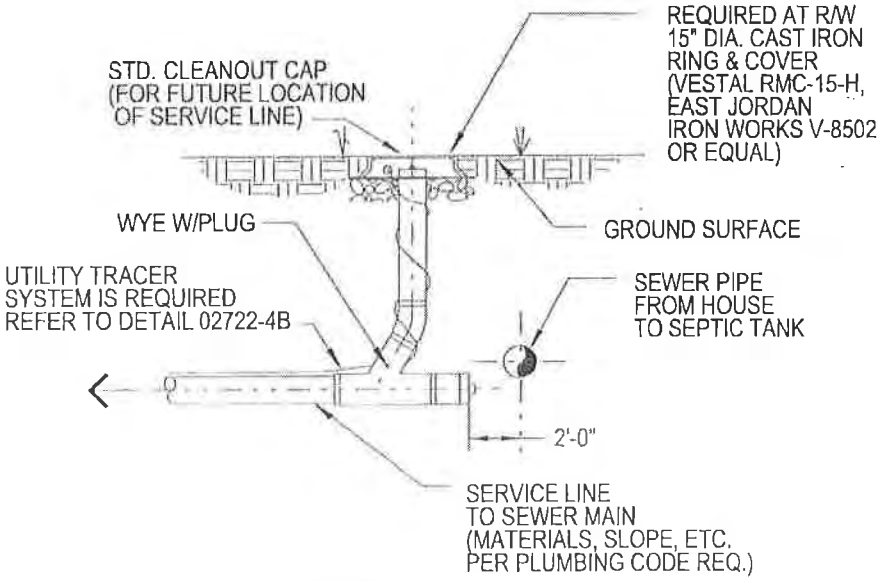

SECTION

SERVICE LINE TERMINATION

DETAIL 02722-4A
COBB COUNTY WATER SYSTEM
UTILITY TRACER

AUGUST 22, 2011

AGENCY DIRECTOR

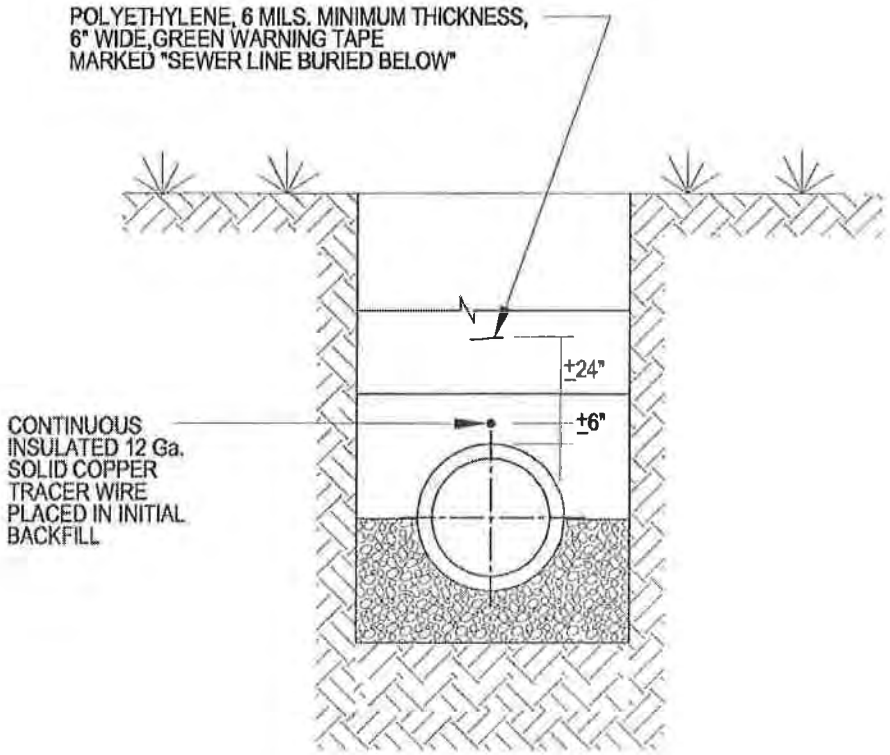

NOTES:
1. TRACER WIRE TO BE 12 AWG SOLID COPPER RATED FOR DIRECT BURY WITH MINIMUM 30 MIL POLYETHYLENE INSULATION.

2. ALL SPLICES AND CONNECTIONS SHALL BE PROTECTED WITH DIRECT BURY CONNECTORS EQUAL TO 3M DBR/Y-6 SPLICE KITS

3. TRACER WIRE TO CONTINUE UNINTERRUPTED AROUND MANHOLES

DETAIL 02722-4B
COBB COUNTY WATER SYSTEM
SEWER SERVICE UTILITY TRACER

AUGUST 22, 2011

AGENCY DIRECTOR

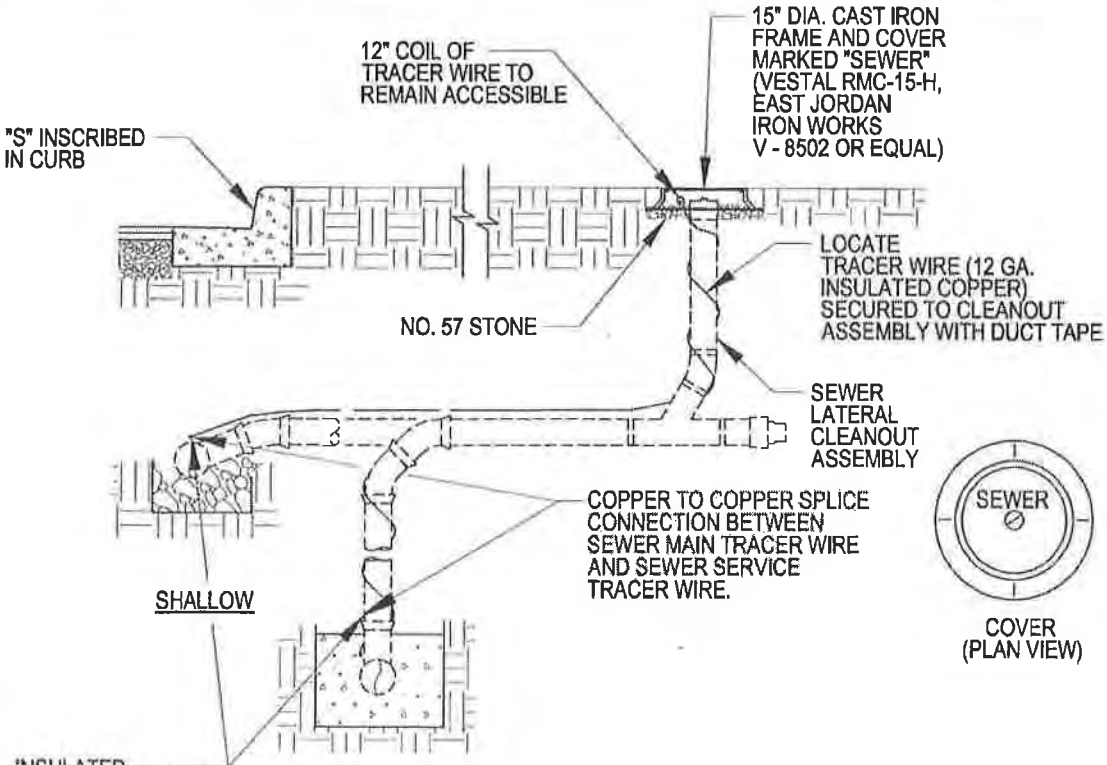

NOTES:

1. TRACER WIRE TO BE 12 AWG SOLID COPPER RATED FOR DIRECT BURY WITH MINIMUM 30 MIL POLYETHYLENE INSULATION.

2. ALL SPLICES AND CONNECTIONS SHALL BE PROTECTED WITH DIRECT BURY CONNECTORS EQUAL TO 3M DBR/Y-6 SPLICE KITS

3. TRACER WIRE INSTALLATION SIMILAR AT SERVICE STUB-OUTS FROM MANHOLES

DETAIL 02722-4C
COBB COUNTY WATER SYSTEM
FORCE MAIN MARKER

JUNE 20, 2007

AGENCY DIRECTOR

Steve McCullers

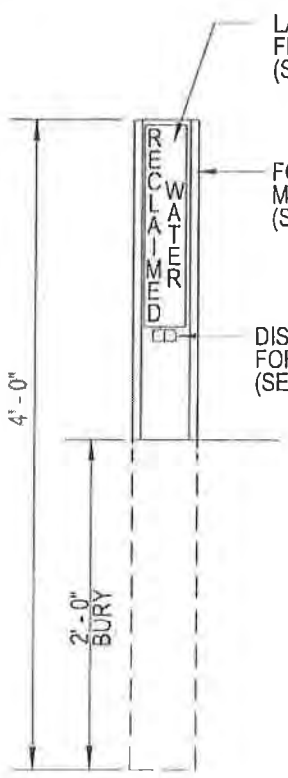

ELEVATION VIEW

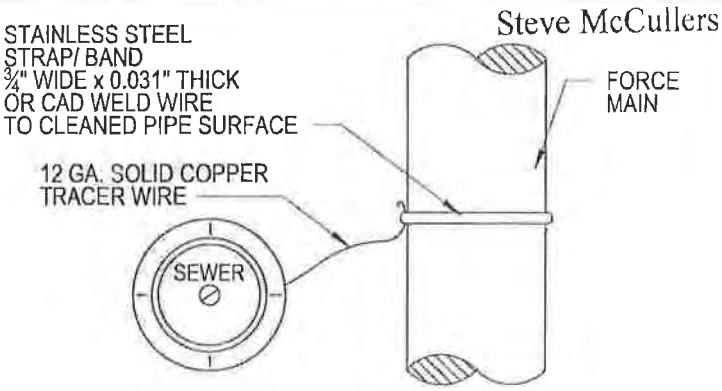

PLAN VIEW

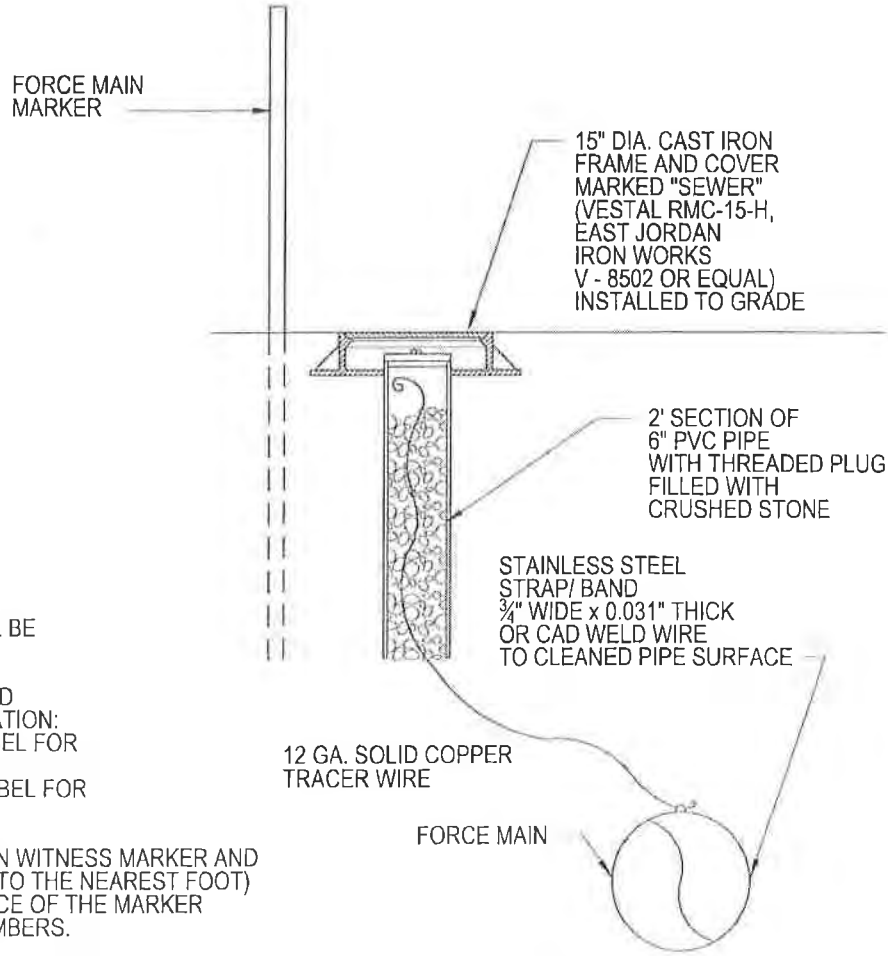

SECTION VIEW

NOTES:

1. FORCE MAIN WITNESS MARKERS SHALL BE CARSONITE UTILITY MARKER OR EQUAL, OF COMPOSITE CONSTRUCTION, APPROXIMATELY 4 - INCHES IN WIDTH, AND IN THE FOLLOWING COLORS FOR APPLICATION:
- WHITE WITH GREEN IDENTIFICATION LABEL FOR SANITARY SEWER FORCE MAINS
- PURPLE WITH WHITE IDENTIFICATION LABEL FOR RECLAIMED WATER FORCE MAINS

2. THE DISTANCE (HORIZONTAL) BETWEEN WITNESS MARKER AND FORCE MAIN WILL VARY. THE DISTANCE (TO THE NEAREST FOOT) SHALL BE REFERENCED ON THE NEAR FACE OF THE MARKER USING PERMANENT ADHESIVE DECAL NUMBERS.

3. FORCE MAIN MARKERS MAY BE INSTALLED WITHOUT THE UTILITY TRACER WIRE PROVISIONS WHERE SO DIRECTED OR NON-ESSENTIAL

DETAIL 02722-10
COBB COUNTY WATER SYSTEM

SANITARY SEWER SERVICE CLEANOUT ASSEMBLY
INSTALLATION ON AN EXISTING 6" SERVICE LINE

August 29, 2005

AGENCY DIRECTOR

Steve McCullers

PROFILE VIEW

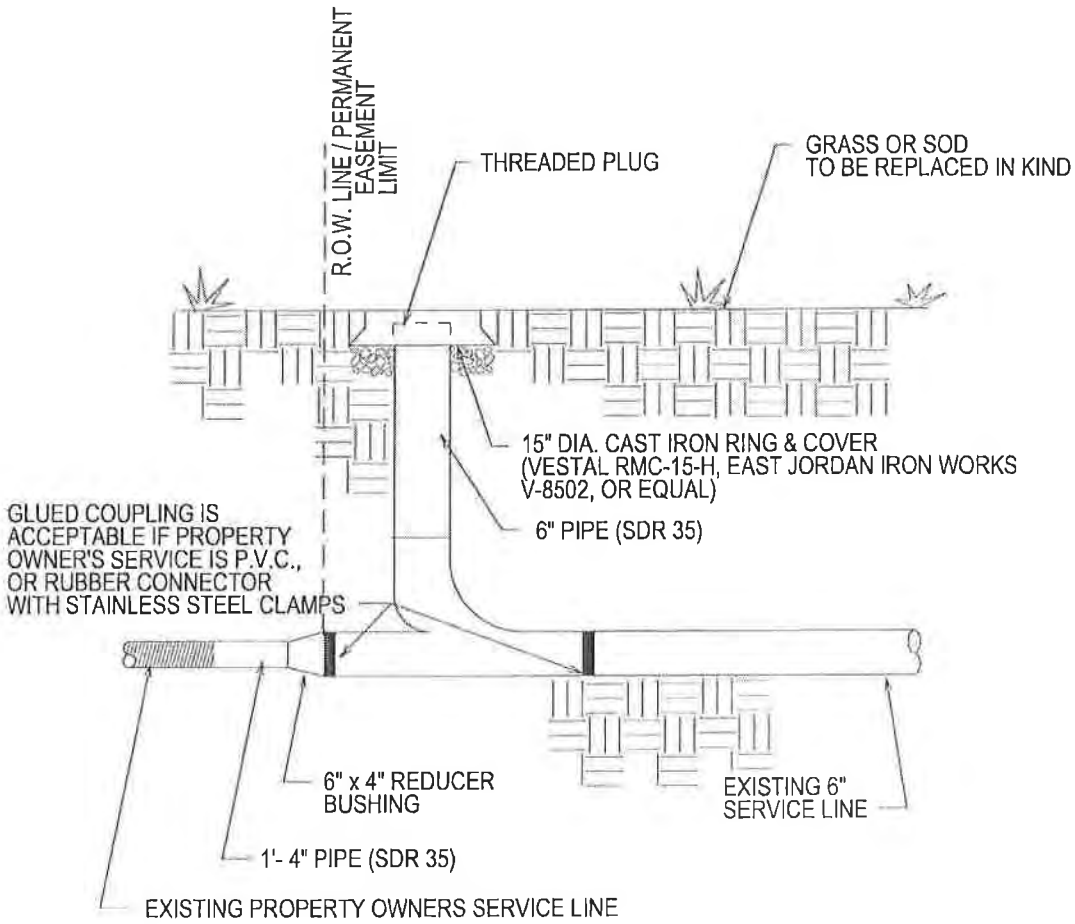

DETAIL 02722-11
COBB COUNTY WATER SYSTEM

SANITARY SEWER SERVICE CLEANOUT ASSEMBLY
INSTALLATION ON AN EXISTING 4" SERVICE LINE

AUGUST 29, 2005

AGENCY DIRECTOR

Steve McCullers

PROFILE VIEW

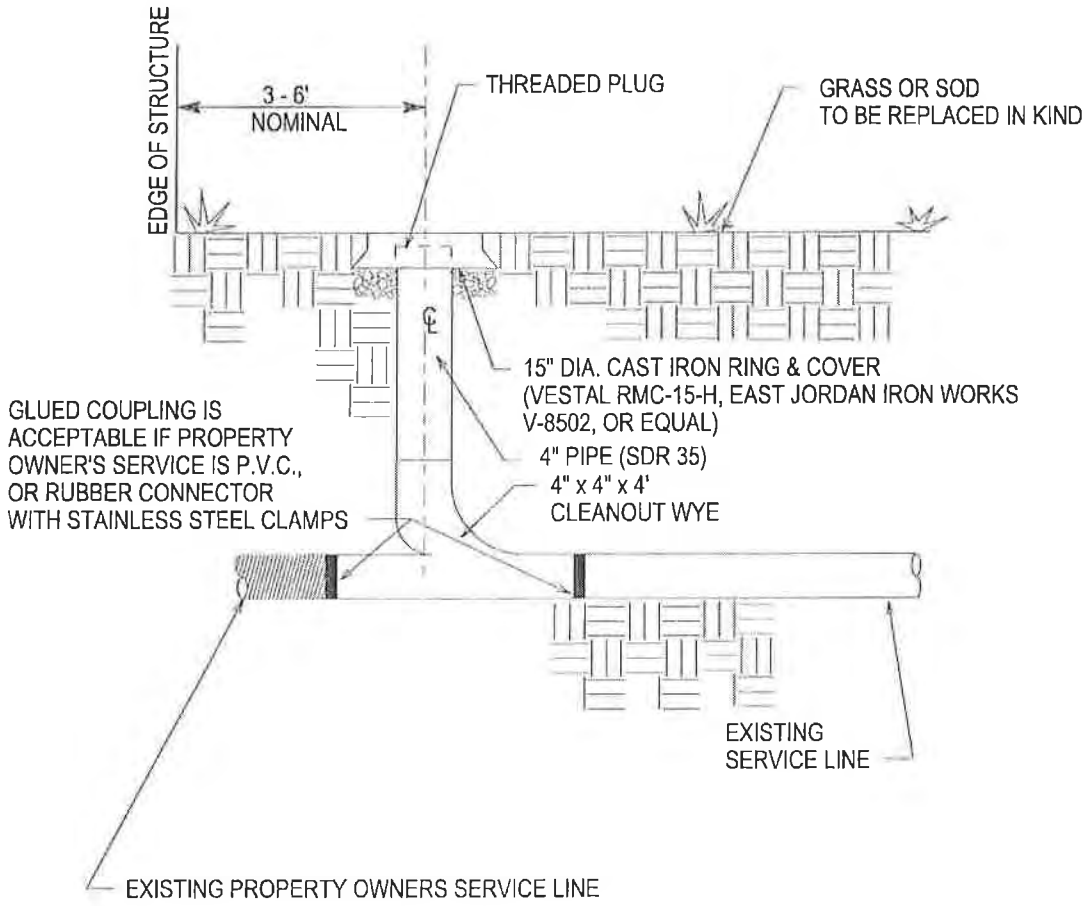

DETAIL 2722-30
COBB COUNTY WATER SYSTEM
SEWAGE BACKWATER VALVE

JULY 14, 2004

AGENCY DIRECTOR

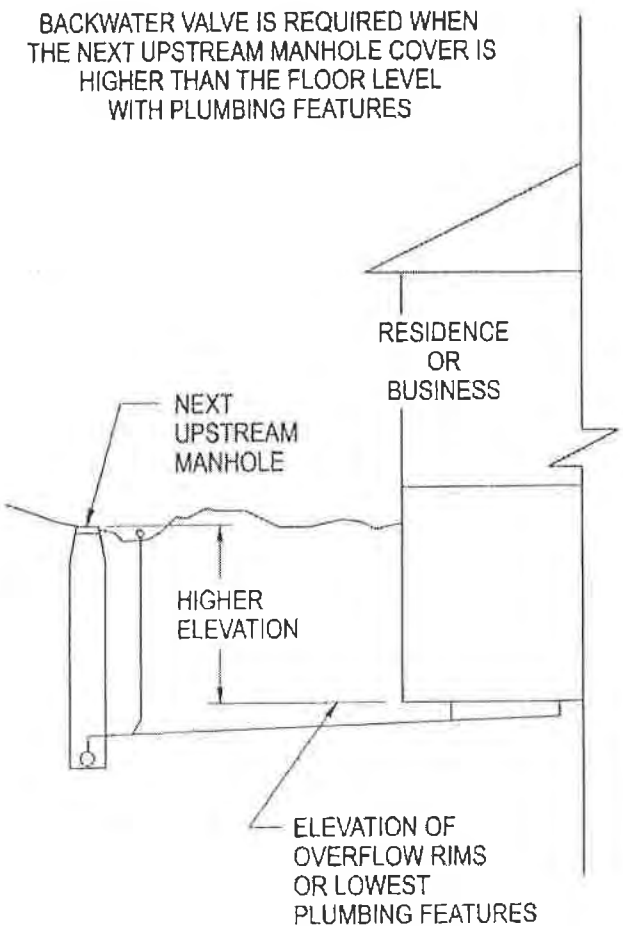

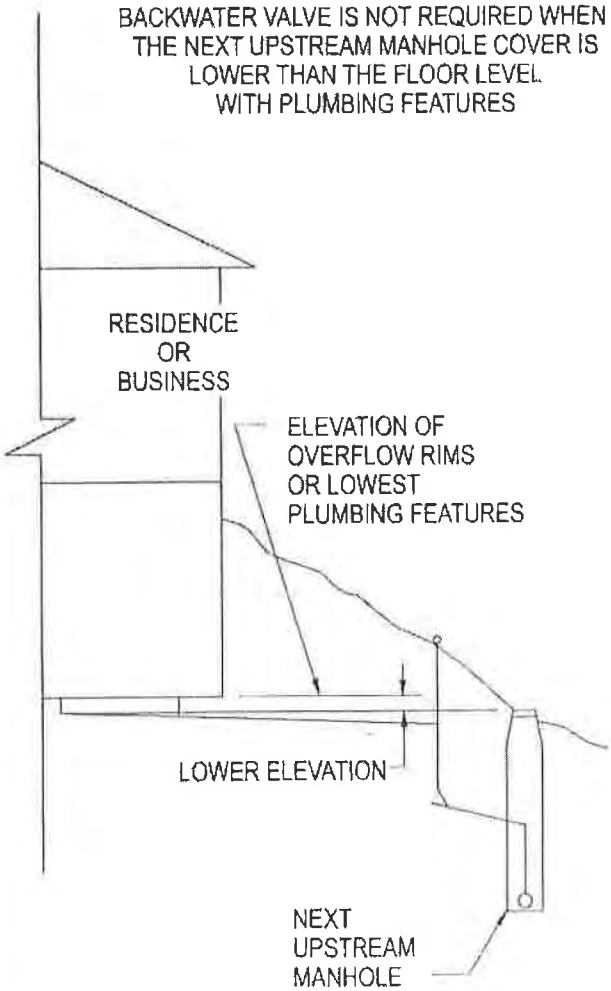

DETAIL 03410-1
COBB COUNTY WATER SYSTEM
STANDARD MANHOLE
(< 20 DEPTH)

MAY 1, 2001

DIRECTOR

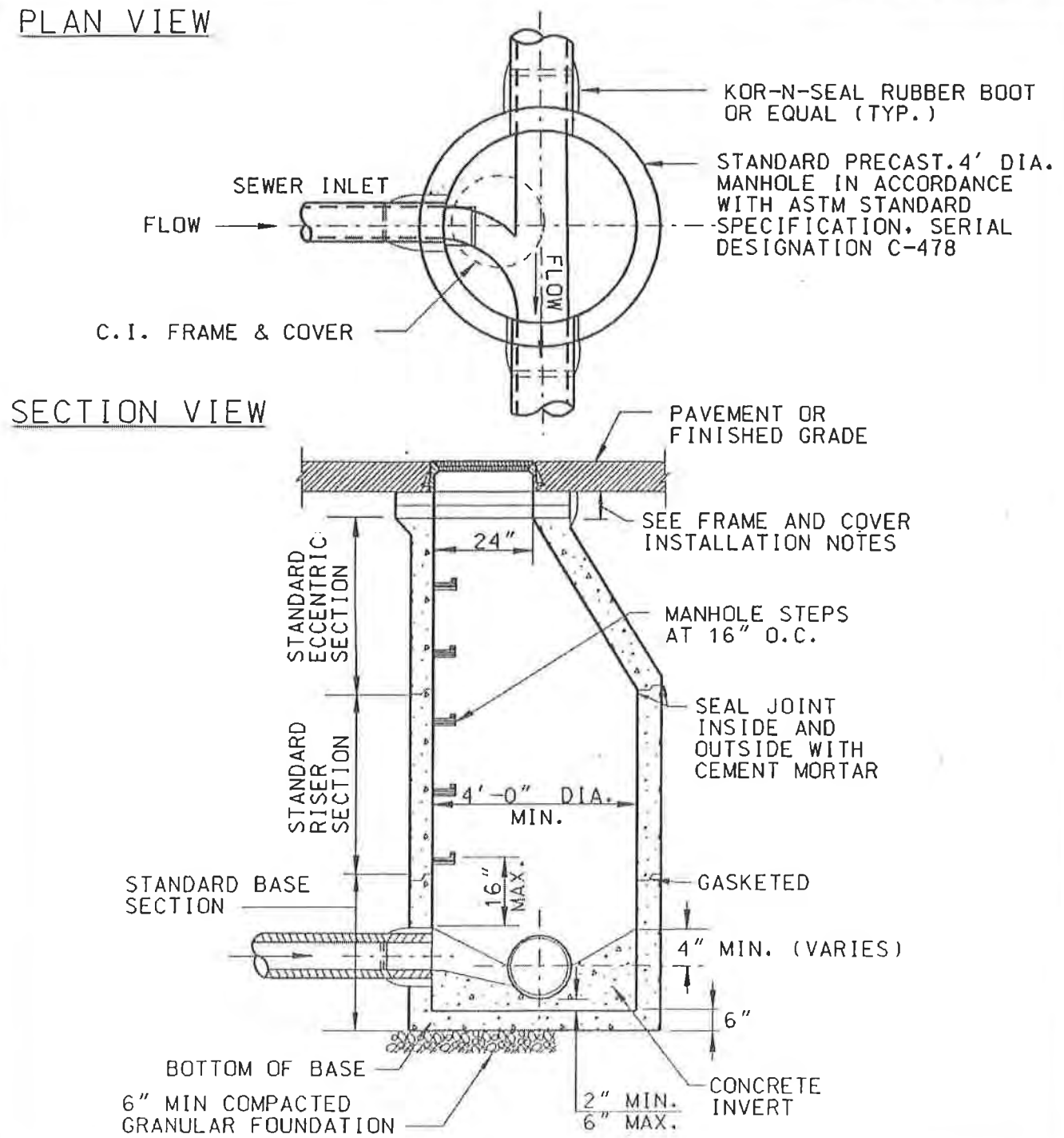

DETAIL 03410-2
COBB COUNTY WATER SYSTEM
STANDARD MANHOLE
FRAME AND COVER INSTALLATION

MAY 1, 2001

ASSISTANT DIRECTOR

FRAME AND COVER INSTALLATION NOTES :

1. COVER TO BE SET FLUSH WITH PAVEMENT AND SHALL MATCH SLOPE OF STREET.
2. ADJUSTMENT OF FRAME AND COVER TO GRADE SHALL BE ACOMPLISHED WITH A PRECAST CONCRETE LEVELING RING OR HDPE (LADTECH, INC. OR EQUAL) ADJUSTING RINGS. IN NO CASE SHALL VERTICAL ADJUSTMENT EXCEED 14-INCHES.
3. FRAME SHALL BE IN CEMENT MORTAR BED (1-1/2" THICKNESS).
4. FRAME SHALL BE PRECAST IN CONE SECTION OF ALL MANHOLES NOT LOCATED IN PAVED AREAS.

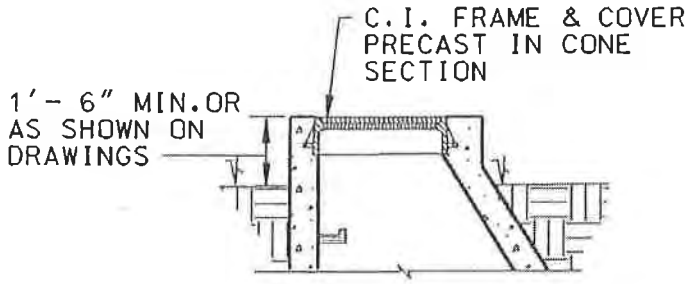

PARTIAL SECTION
(TYP. FOR PROJECTING TOP)

DETAIL 03410-3
COBB COUNTY WATER SYSTEM
SHALLOW MANHOLE (< 4′- 6″ DEPTH)
(SECTION VIEW)

MAY 1, 2001

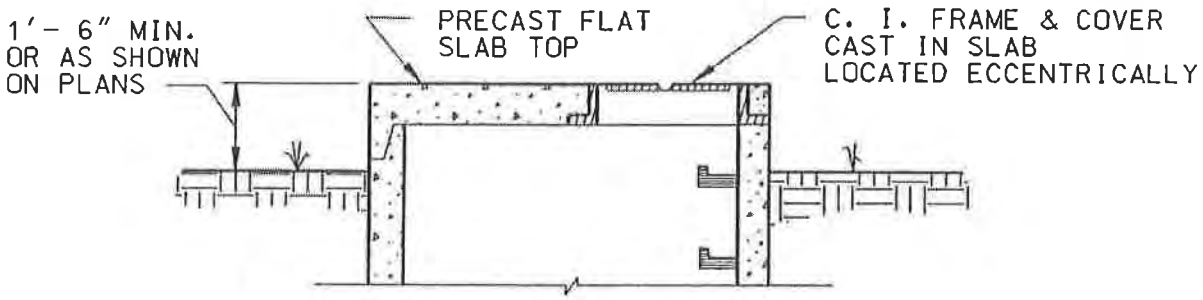

PARTIAL SECTION

(Typical For Projecting Top)

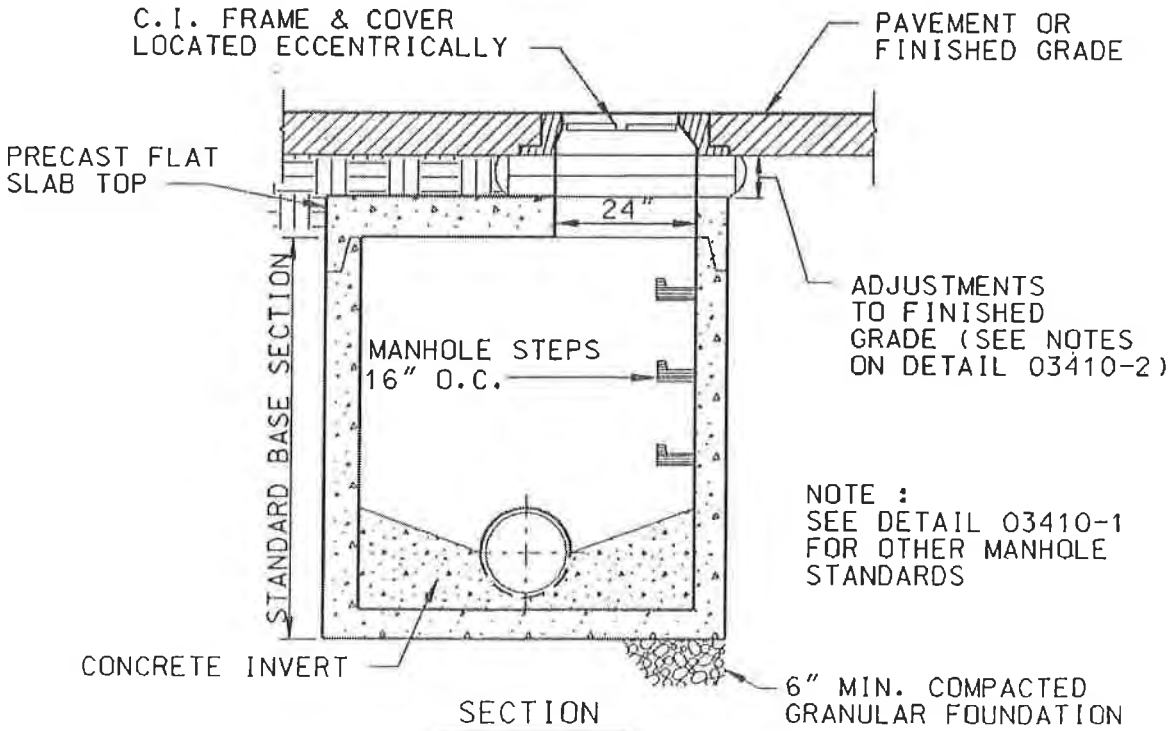

SECTION

(Typical for Flush Top)

DETAIL 03410-4
COBB COUNTY WATER SYSTEM
DOGHOUSE MANHOLE

MAY 1, 2001

AGENCY DIRECTOR

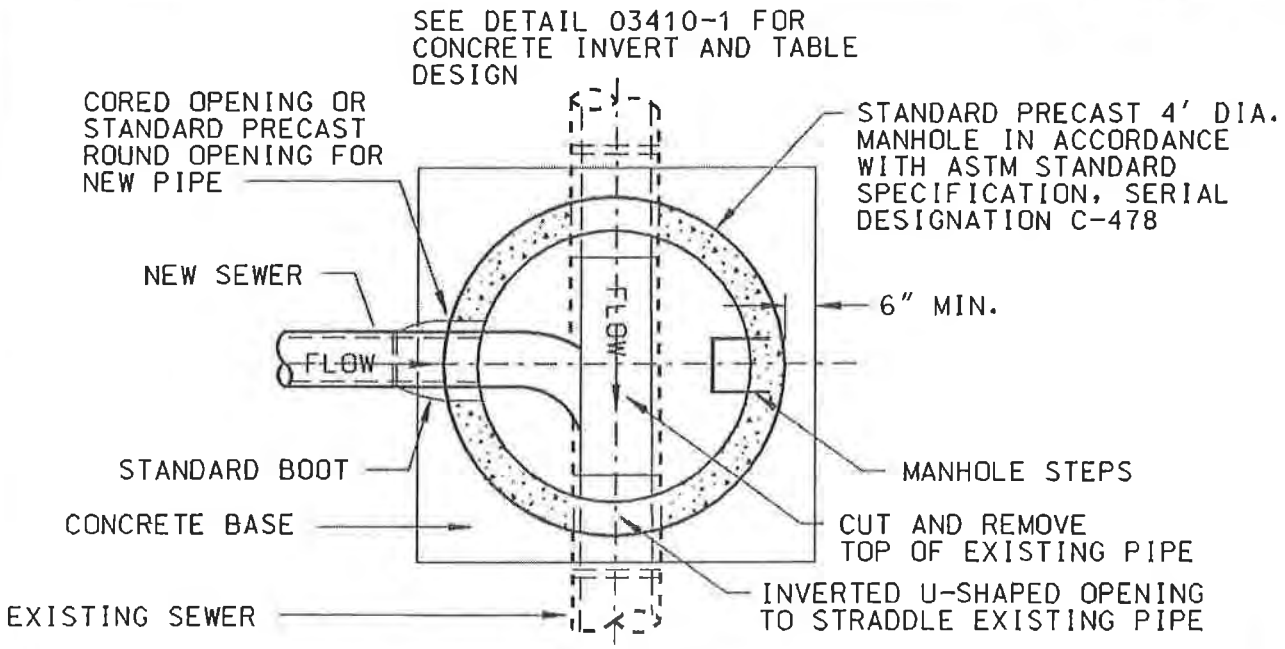

PLAN VIEW

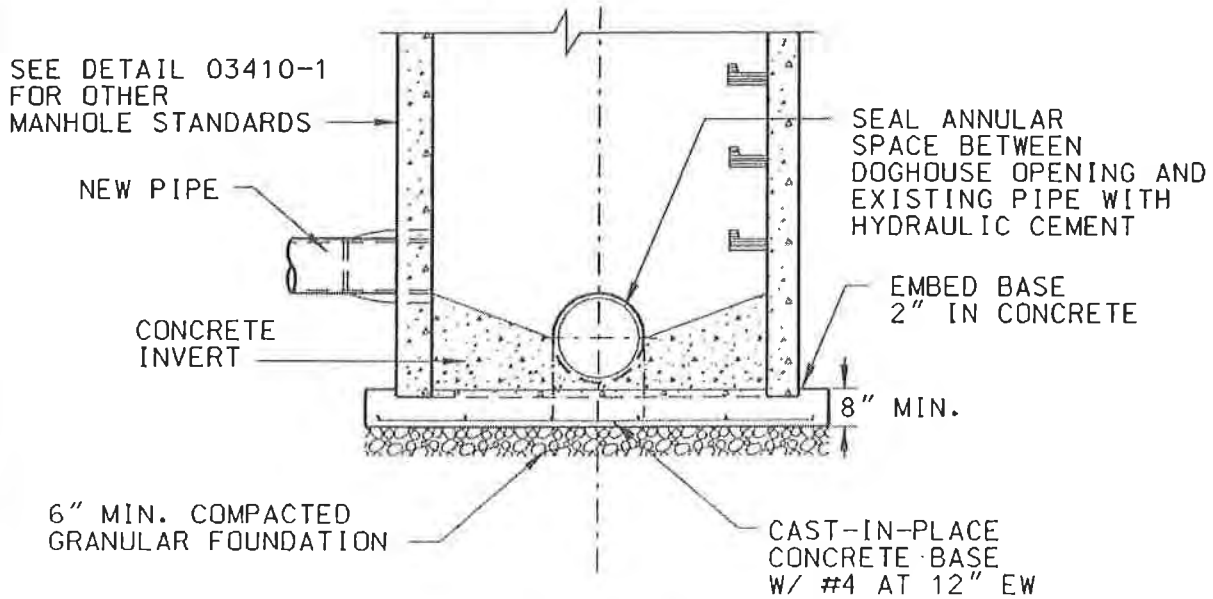

SECTION

DETAIL 03410-5
COBB COUNTY WATER SYSTEM
DEEP MANHOLE
(> 20 FEET MANHOLE)

MAY 1, 2001

AGENCY DIRECTOR

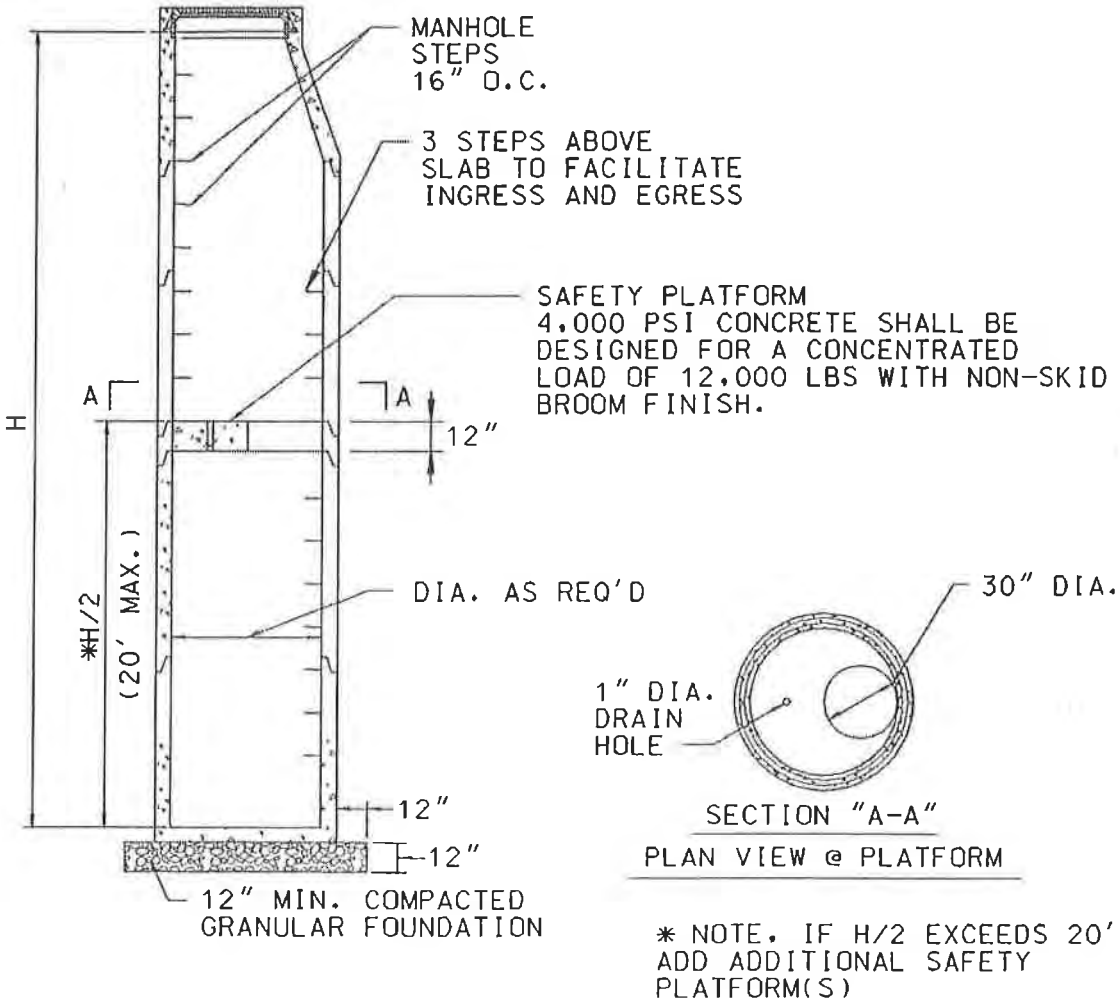

* NOTE, IF H/2 EXCEEDS 20' ADD ADDITIONAL SAFETY PLATFORM(S)

DETAIL 03410-6
COBB COUNTY WATER SYSTEM
VENTED MANHOLE

MAY 1, 2001

DIRECTOR

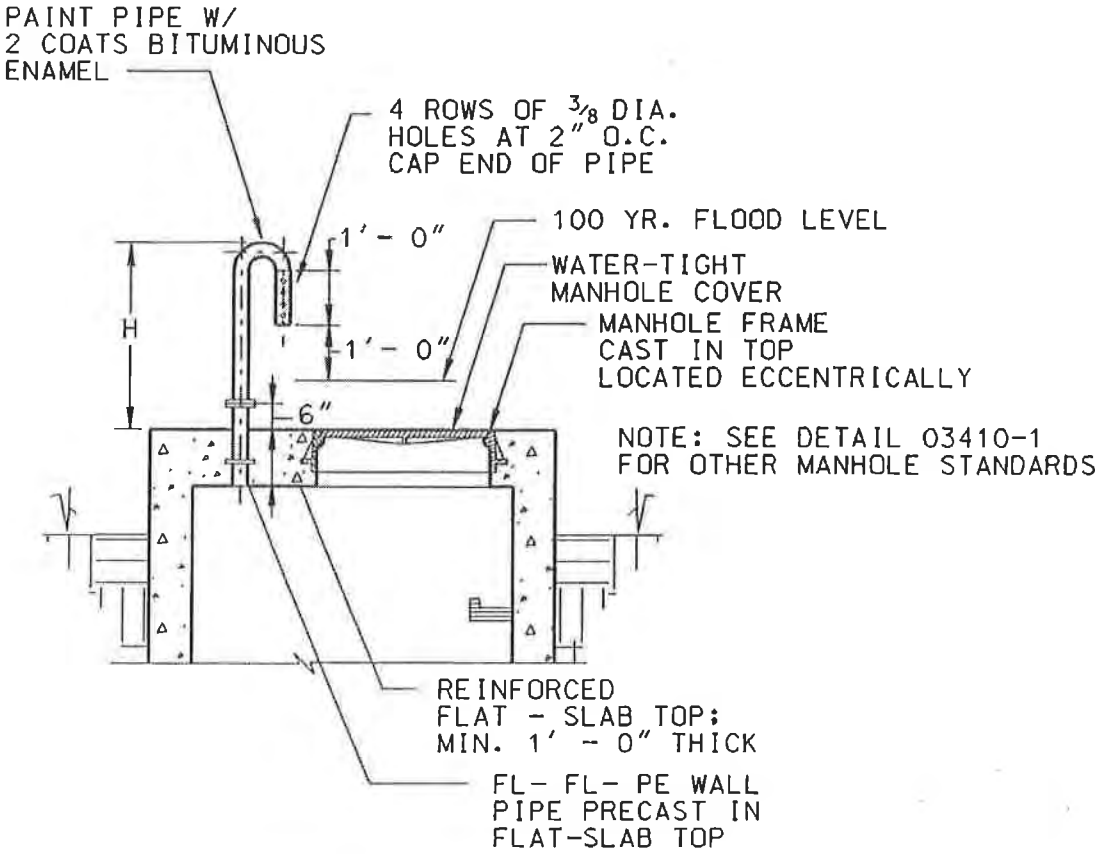

SECTION

STEEL PIPE SCHEDULE 80

3" DIA. FOR "H" LESS THAN 6'-0"
4" DIA. FOR "H" = 6'-0" TO 10'- 0"
5" DIA. FOR "H"=10'-0" TO 15'- 0"
6" DIA. FOR "H"= MORE THAN 15'- 0"

DETAIL 03410-7
COBB COUNTY WATER SYSTEM
OUTSIDE DROP CONNECTION

SEPTEMBER 28, 2010

AGENCY DIRECTOR

NOTE:
SEE DETAIL 03410-1 FOR
OTHER MANHOLE STANDARDS

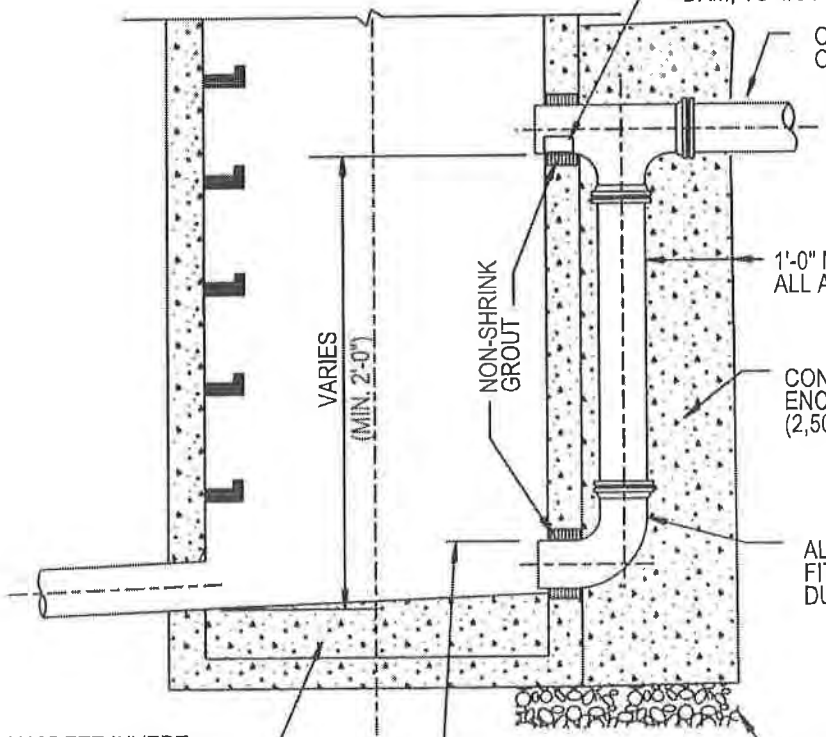

DETAIL 03410-8
COBB COUNTY WATER SYSTEM
INSIDE DROP MANHOLE CONNECTION

AUGUST 1, 2001

AGENCY DIRECTOR

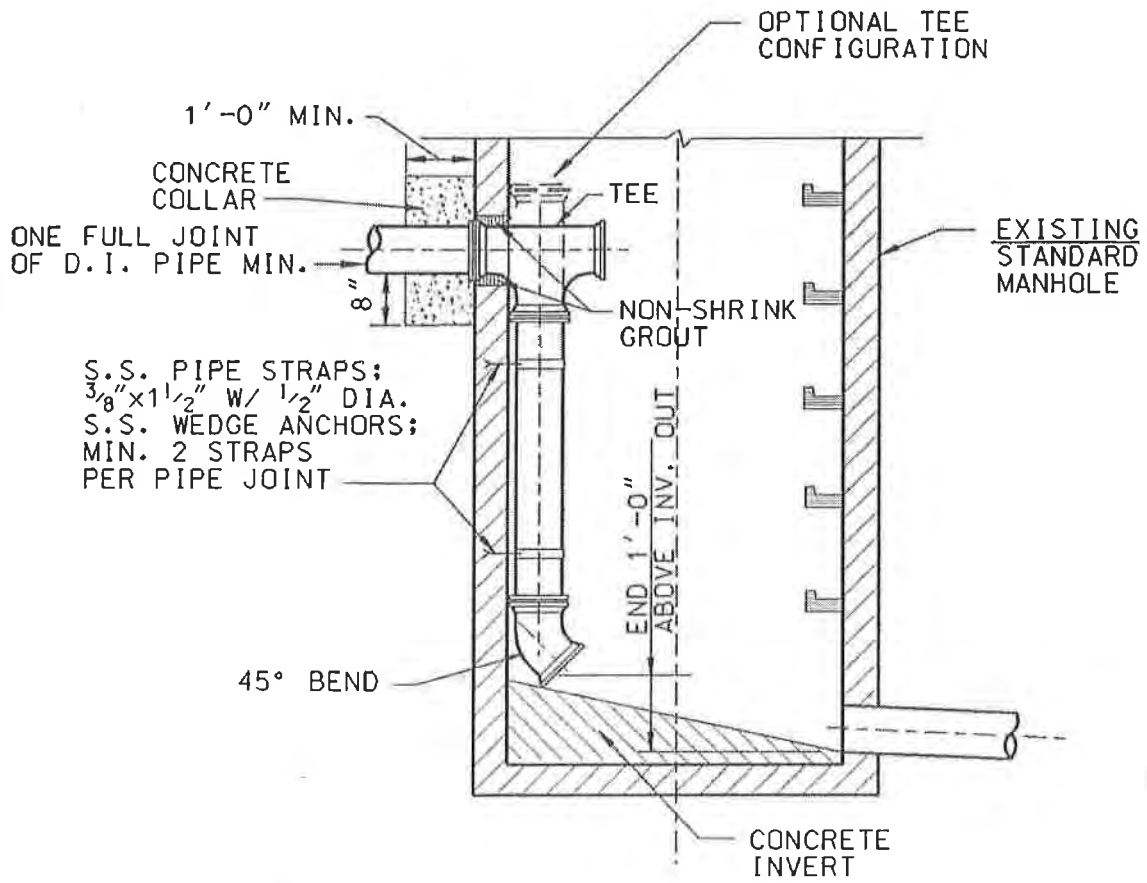

NOTE : 1. INSIDE DROP CONNECTIONS SHALL ONLY BE USED WHERE APPROVED BY THE WATER SYSTEM
2. ALL PIPING SHALL BE DUCTILE IRON. FITTINGS SHALL BE RESTRAINED JOINT.

DETAIL 03410-9
COBB COUNTY WATER SYSTEM
MANHOLE RAISING IN PAVEMENT

JUNE 21, 2007

AGENCY DIRECTOR

Steve McCullers

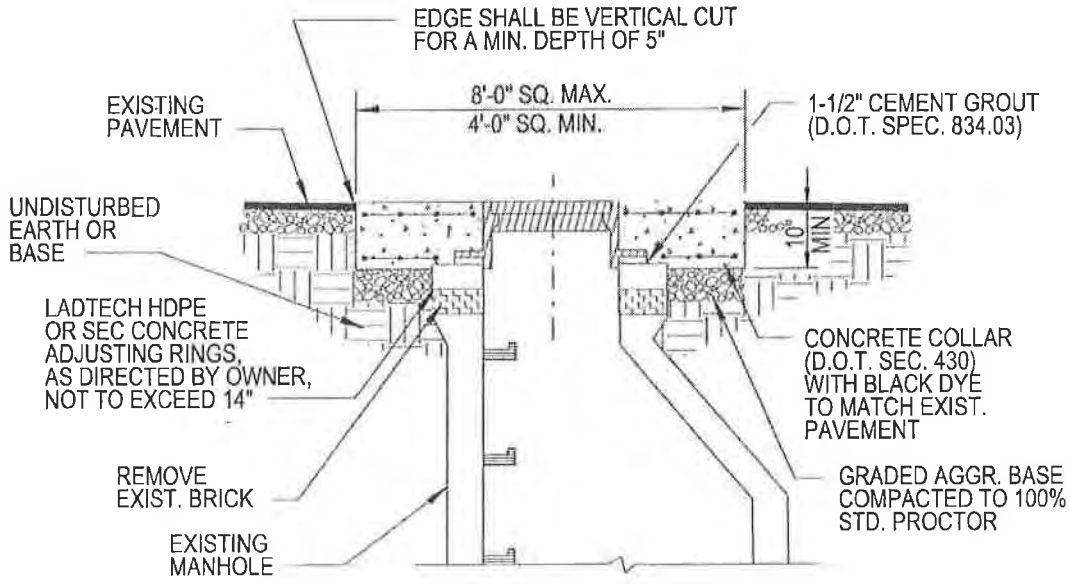

MANHOLE RAISING NOTES :

1. CONCRETE FOR COLLAR SHALL BE A MIN. OF 10" THICK.
2. IF REPLACEMENT OF THE FRAME & COVER IS NECESSARY, ACCEPTABLE PRODUCTS ARE EAST JORDAN IRON WORKS V-1480-1 OR U.S. FOUNDRY 360E.
3. ALL MANHOLE FRAME GRADE ADJUSTMENTS SHALL CONFORM TO THE REQUIREMENTS OF THIS DETAIL.
4. REINFORCEMENT SHALL BE CUT-TO-FIT MAT OF 6"x 6", 10x10 GAUGE WELDED WIRE FABRIC PLACED WITH 2" CLEARANCE FROM BOTTOM AND TOP SURFACES.

DETAIL 03410-10
COBB COUNTY WATER SYSTEM
MANHOLE RAISING OUT OF PAVEMENT

MARCH 8, 2006

AGENCY DIRECTOR

Steve McCullers

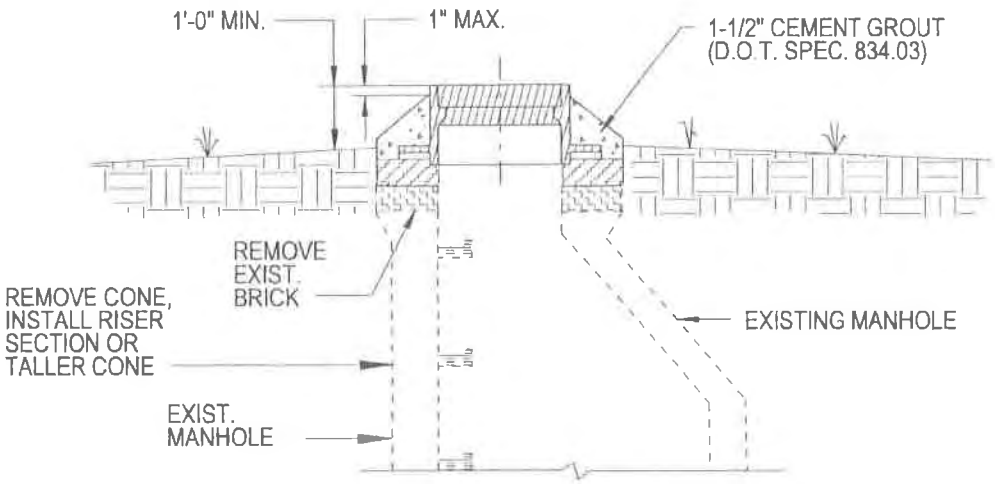

MANHOLE RAISING NOTES:
IF REPLACEMENT OF THE FRAME & COVER IS NECESSARY, ACCEPTABLE PRODUCTS ARE EAST JORDAN IRON WORKS V-1480-1,V-2480, V-2480-1, OR U.S. FOUNDRY 360E OR 360E/WT AS REQUIRED BY FIELD CONDITIONS OR DIRECTED BY OWNER.

RING AND COVER SHALL BE SECURED TO MANHOLE WITH FOUR EACH 1/2-INCH DIAMETER STAINLESS STEEL THREADED RODS (WITH NUTS AND WASHERS) EPOXY ADHESIVE ANCHORED INTO SOUND MANHOLE STRUCTURE (REFERENCE DETAIL 03410-30)

DETAIL 03410-11
COBB COUNTY WATER SYSTEM
STANDARD MANHOLE FRAME AND COVER

MAY 1, 2001

AGENCY DIRECTOR

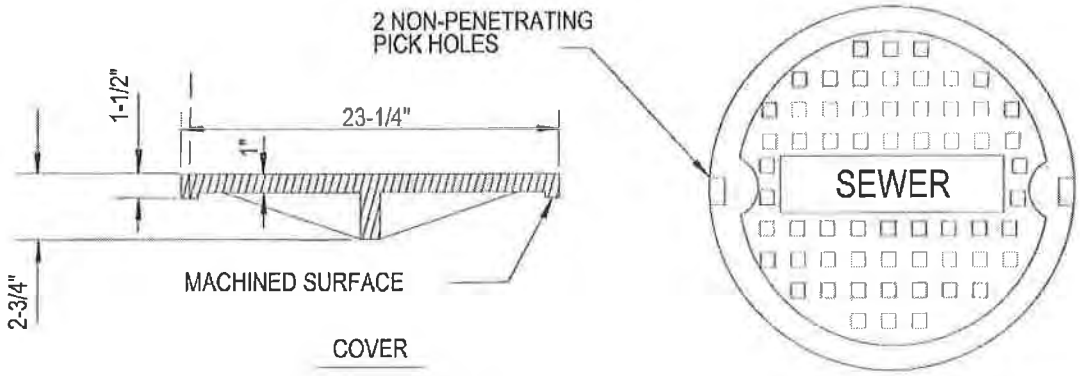

COVER

(MIN. WT. = 120 LBS.)

STANDARD FRAME AND COVER:

EAST JORDAN IRON WORKS V-1480,
U.S. FOUNDRY
MODEL USF-360E
OR APPROVED EQUAL.

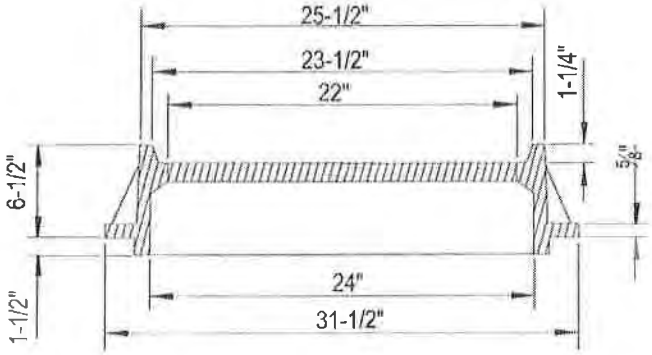

FRAME

(MIN. WT. = 170 LBS.)

DETAIL 03410-12
COBB COUNTY WATER SYSTEM
WATERTIGHT MANHOLE FRAME AND COVER

APRIL 8, 2003

AGENCY DIRECTOR

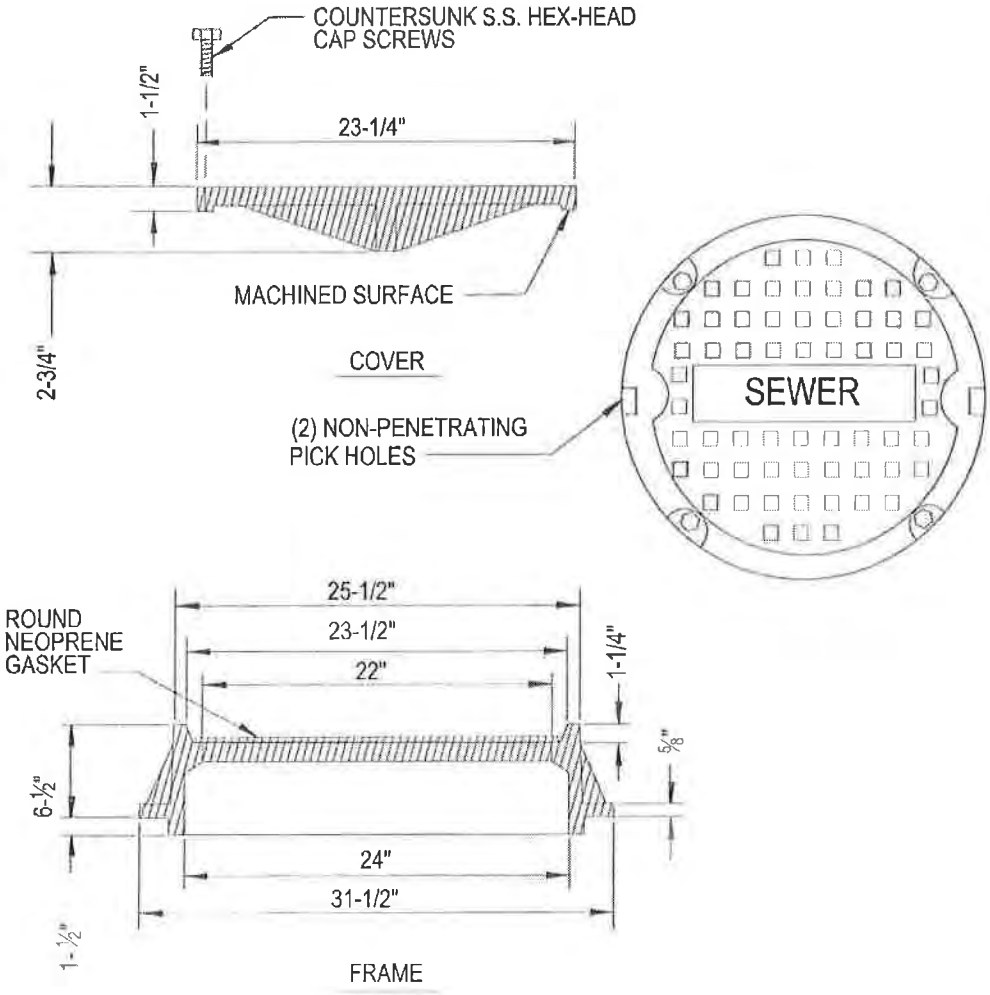

EAST JORDAN IRON WORKS V-2480,
U.S. FOUNDRY MODEL 360E/ORS
OR APPROVED EQUAL

MIN. FRAME WT. 170LBS. (APPROX.)
MIN. COVER WT. 120LBS. (APPROX.)

DETAIL 3410-13
COBB COUNTY WATER SYSTEM

STANDARD STORM DRAIN COVER- CHATTAHOOCHEE RIVER

JANUARY 23,2002

AGENCY DIRECTOR

IRON SOLUTIONS, INC.
PRODUCT NO. NCR01-1327

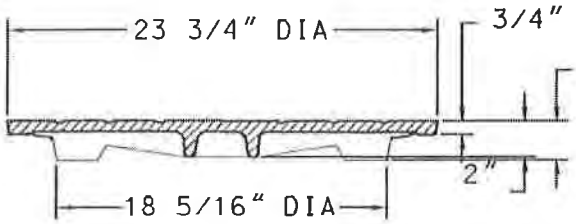

COVER SECTION

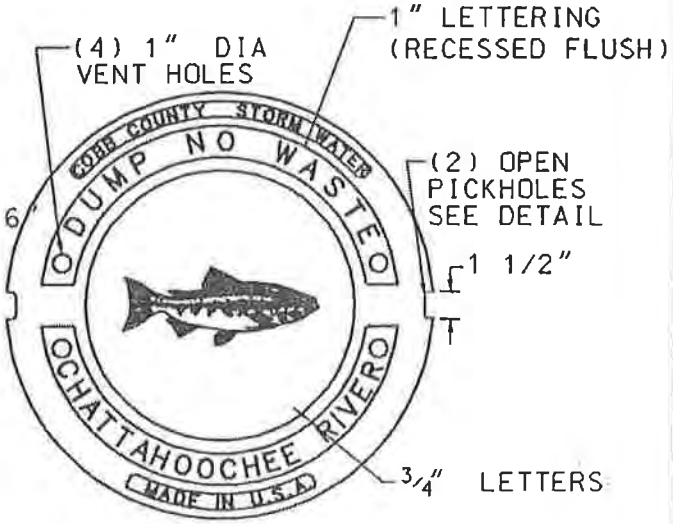

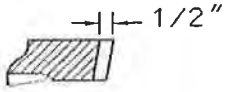

OPEN PICKHOLE DETAIL

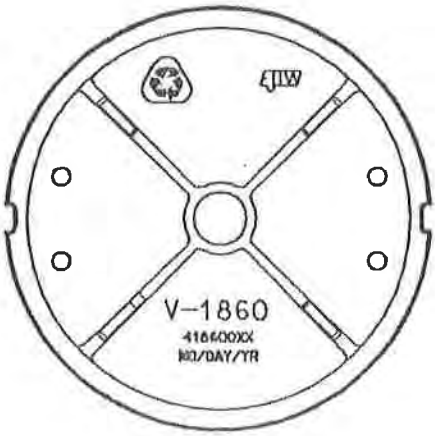

BOTTOM VIEW

DETAIL 3410-14
COBB COUNTY WATER SYSTEM

STANDARD STORM DRAIN COVER- ETOWAH RIVER

JANUARY 23,2002

AGENCY DIRECTOR

IRON SOLUTIONS, INC.
PRODUCT NO. NCR01-1227D

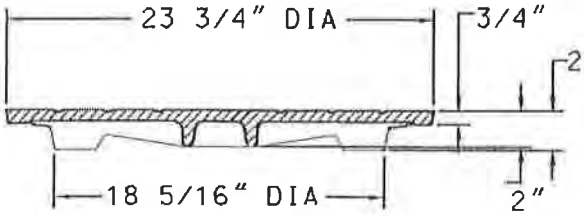

COVER SECTION

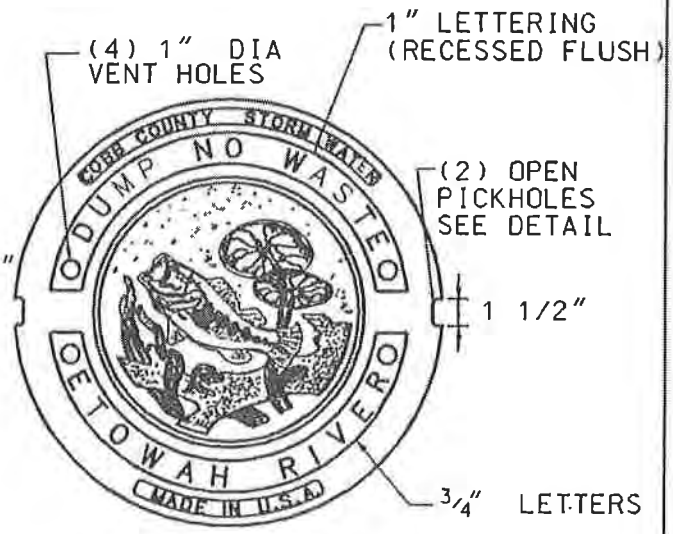

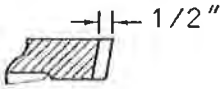

OPEN PICKHOLE DETAIL

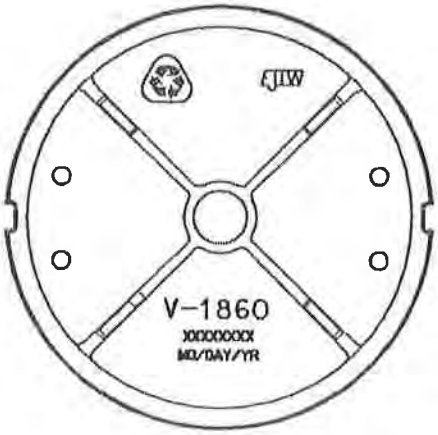

BOTTOM VIEW

DETAIL 03410-20-A
COBB COUNTY WATER SYSTEM
GREASE TRAP

OCTOBER 22, 2010

AGENCY DIRECTOR

Steve McCullers

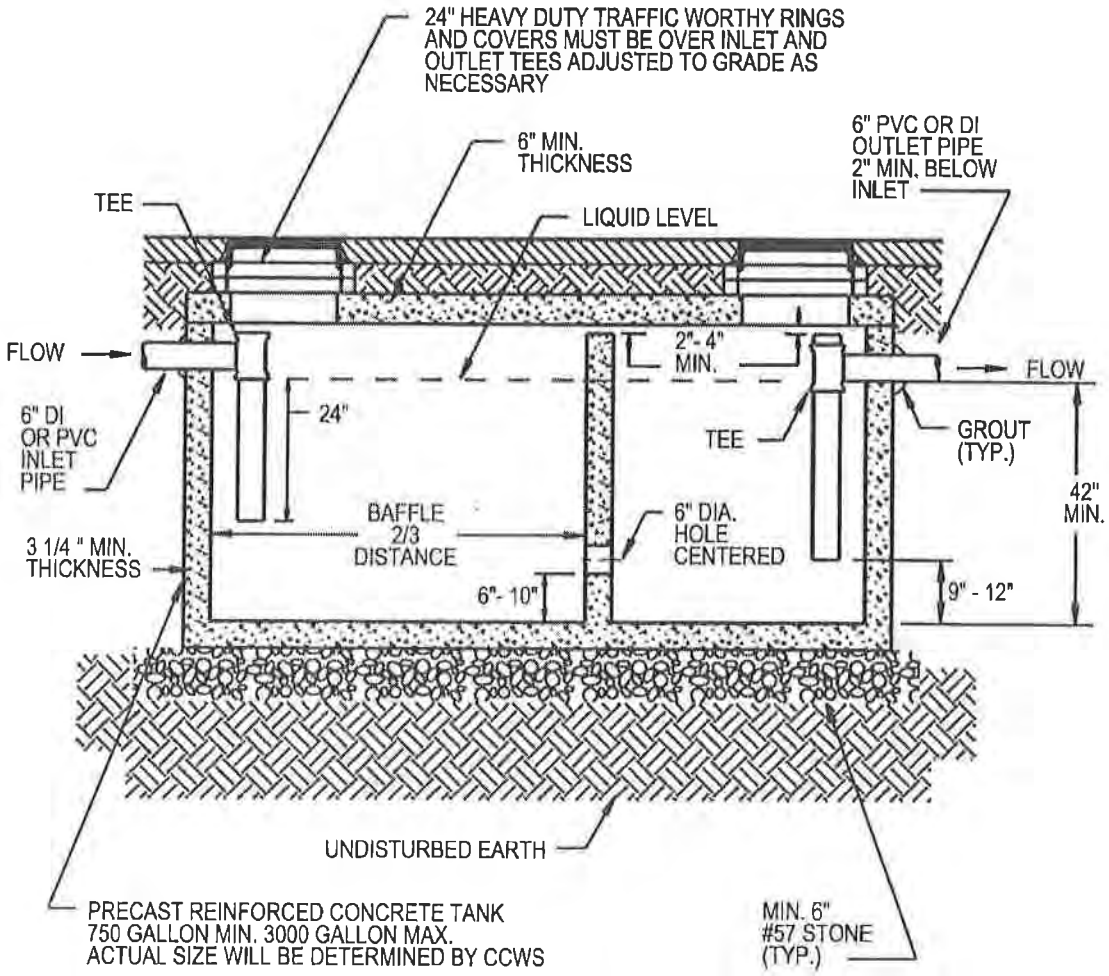

NOTE: INSPECTION BY WATER SYSTEM (ENVIRONMENTAL COMPLIANCE) REQUIRED BEFORE COVERING
(770) 419-6340

DETAIL 03410-20-B
COBB COUNTY WATER SYSTEM
NON-FOOD PREPARATION DUMPSTER TRAP

OCTOBER 22, 2010

AGENCY DIRECTOR

Steve McCullers

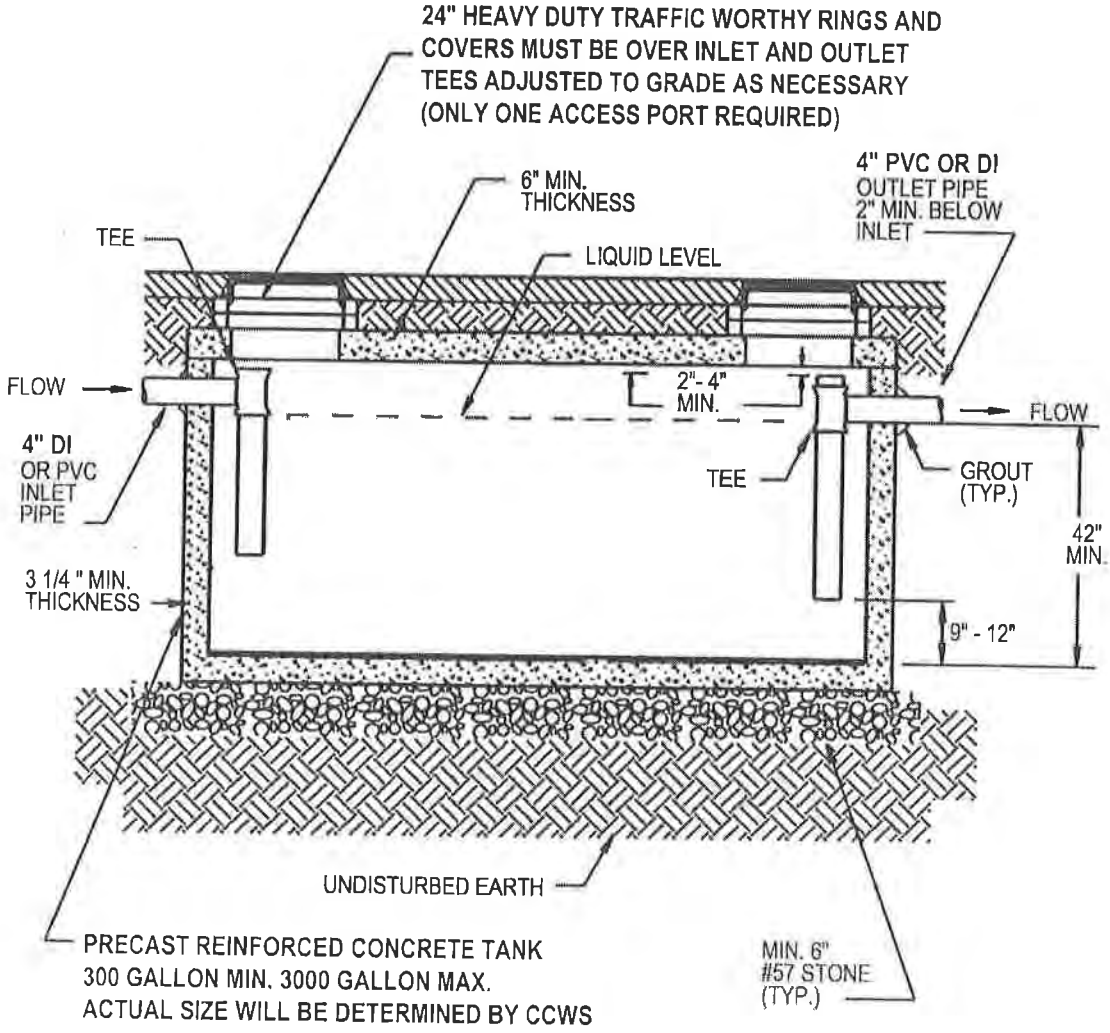

NOTE: INSPECTION BY WATER SYSTEM (ENVIRONMENTAL COMPLIANCE) REQUIRED BEFORE COVERING
(770) 419-6340

DETAIL 03410-30
COBB COUNTY WATER SYSTEM
MANHOLE FRAME AND COVER REPLACEMENT ON EXISTING MANHOLE OUT OF PAVEMENT

MARCH 15, 2004

AGENCY DIRECTOR

Steve McCullers

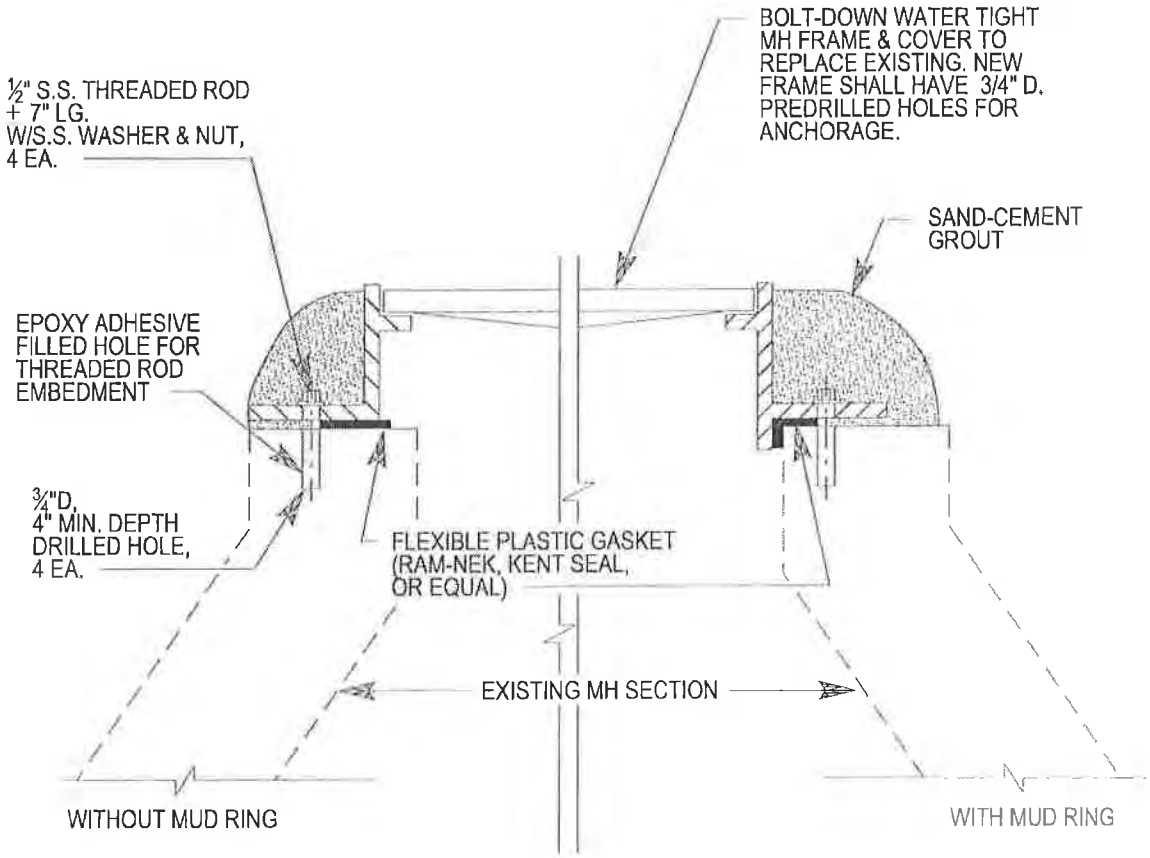

DETAIL 03410-31
COBB COUNTY WATER SYSTEM
MANHOLE RAISING FOR EXISTING MANHOLE ON EASEMENT

MARCH 15, 2004

AGENCY DIRECTOR

Steve McCullers

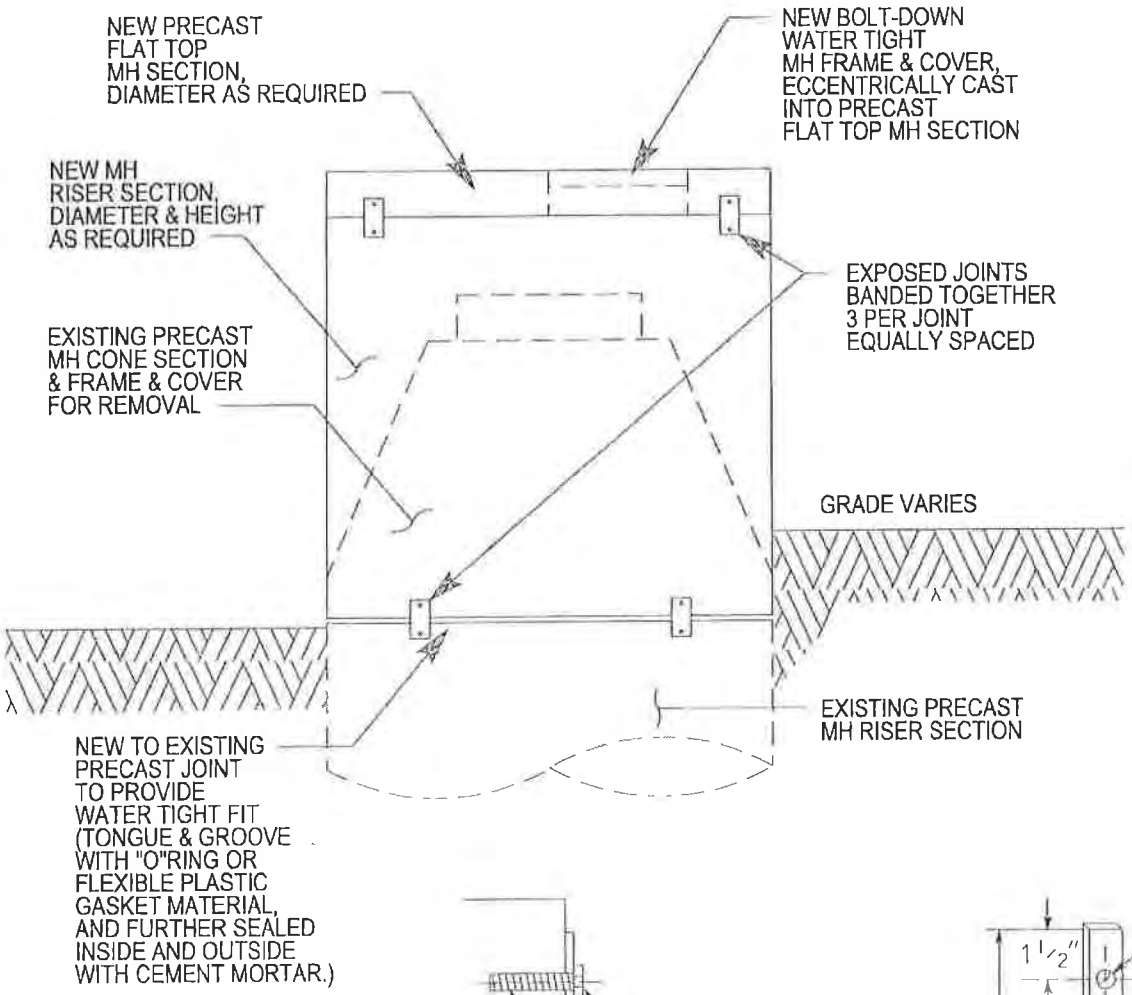

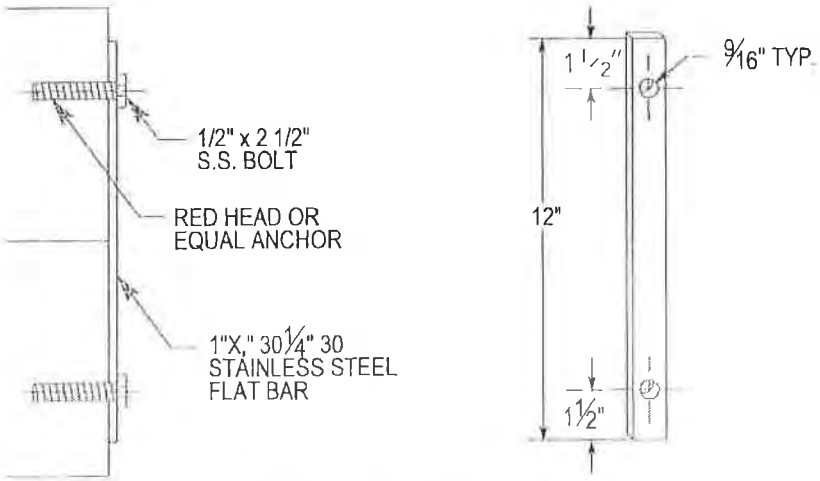

ANCHOR STRAP DETAIL

DETAIL 03410-32
COBB COUNTY WATER SYSTEM
RAISING BRICK MANHOLE WITH PRECAST SECTION

MARCH 15, 2004

AGENCY DIRECTOR

Steve McCullers

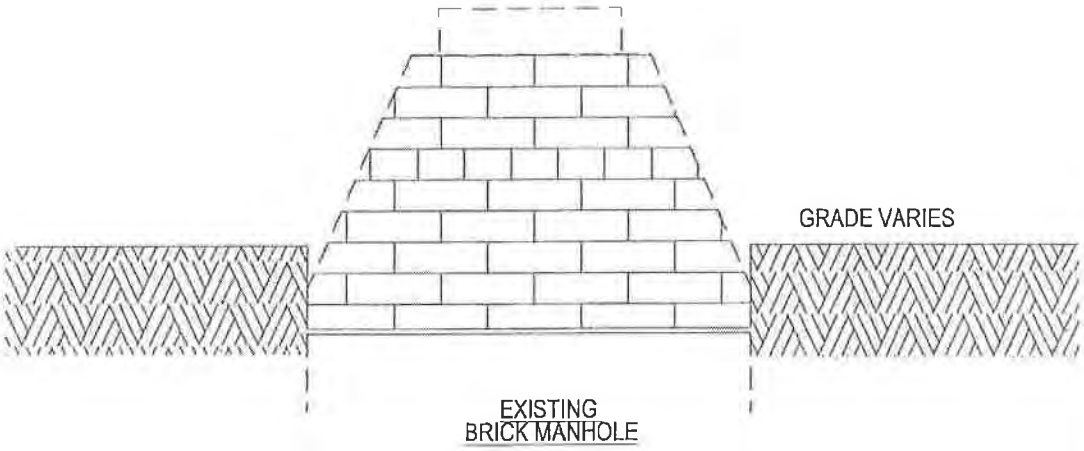
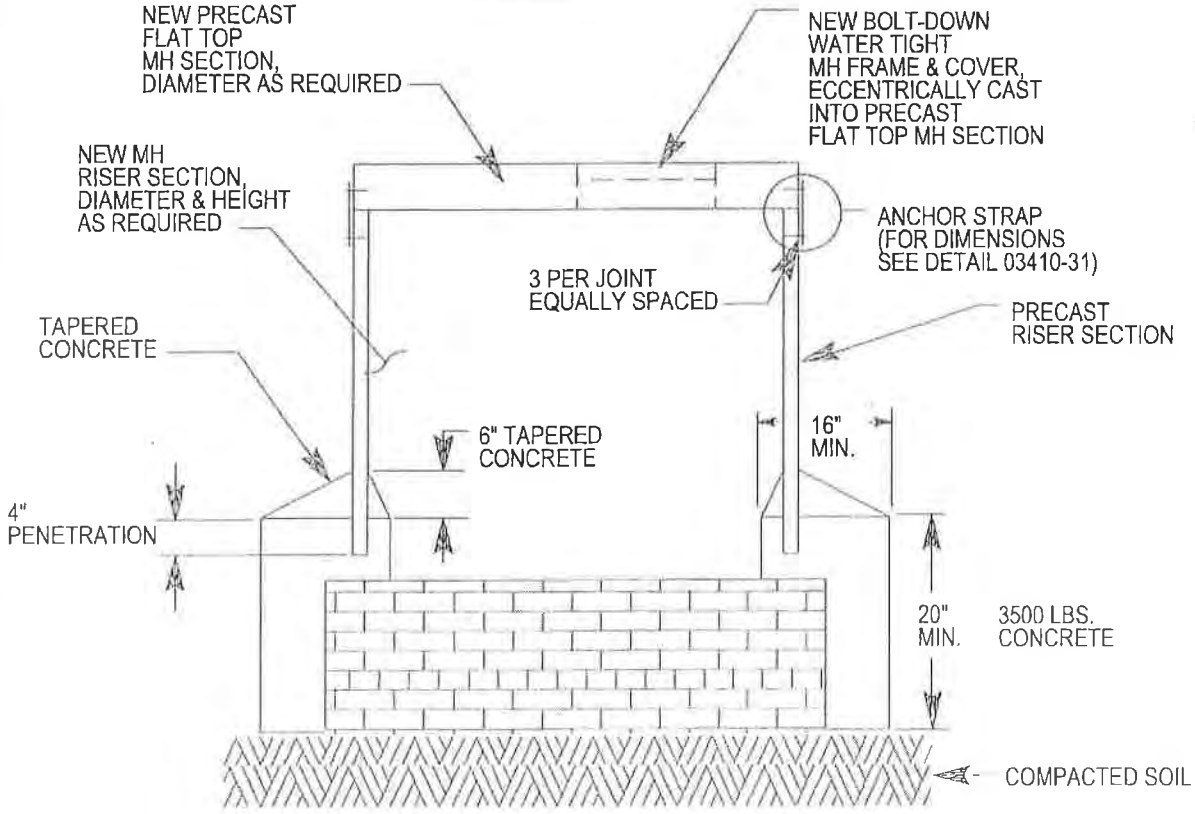
NEW TO EXISTING